This is a reproduction of a library book that was digitized by Google as part of an ongoing effort to preserve the information in books and make it universally accessible.

Google™ books

https://books.google.com

601640682X

EQUIPMENT REGULATIONS
1896.
GARRISON ARTILLERY
DETAILS

Google

MILITARY BOOKS.

Published by uthority.

LONDON:
PRINTED FOR HER MAJESTY'S STATIONERY OFFICE.

SOLD BY
EYRE AND SPOTTISWOODE, EAST HARDING STREET, LONDON, E.C.
JOHN MENZIES & Co., 12, HANOVER STREET, EDINBURGH; AND 90, WEST NILE STREET, GLASGOW.
HODGES, FIGGIS, & Co., LIMITED, 104, GRAFTON STREET, DUBLIN.

AMBULANCE TRANSPORT. A Manual of. Second Edition. 1893. Price 6*s*.

ARMY REGULATIONS:—

ARMY PAY, APPOINTMENT, PROMOTION, AND NON-EFFECTIVE PAPERS. Royal Warrant for. 1896. Price 1*s*.

ALLOWANCES OF THE ARMY. Regulations for, 1895. Price 1s.

EQUIPMENT OF HER MAJESTY'S ARMY. Regulations for:—

Part 1. Peace. 1895. 8vo. 192 pp. Cloth. Price 1s.

Part 2. Peace. Section I. Infantry. Details. Price 4*d*. Section II. Cavalry. Details. Price 6*d*. Section III. Army Service Corps. Details. Price 6*d*. Section IV. Army Ordnance Store Corps. Details. Price 1*d*. Section V. and VA. Medical Staff Corps and Army Pay Corps. Details. Price 1*d*. Sections VI.-IX. Colleges and Prisons. Details. Price 1*d*. Section X. Royal Engineer. Details. Price 1*s*. 6*d*. Section XI. Field Artillery. Price 6*d*. Section XII. Garrison Artillery. Special Instructions and Details. Price 7*s*.

Part 3. War. 1893. General Regulations. Price 3*d*. Details:—Section I. Staff Units. Price 4½*d*. Section II. Cavalry. Price 1*s*. 6*d*. Section IIIA. Royal Artillery (Horse and Field Artillery). Price 1*s*. 6*d*. Section IIIB. Royal Artillery (Mountain Artillery, Camel Battery, Colonial Field Equipment). Price 2*s*. Section IV. Royal Engineers. Price 2*s*. Section V. Mounted Infantry. Price 1*s*. Section VI. Infantry. Price 9*d*. Section VII. Army Signallers. Price 4½*d*. Section VIII. Army Service Corps. Price 1*s*. 6*d*. Section IX. Medical Staff Corps Price 6*d*. Section X. Remount Depôt and Sick Horse Depôt. Price 6*d*. Section XI. Ordnance Store Corps. Price 6*d*.

DRESS REGULATIONS FOR OFFICERS OF THE ARMY (including the Militia). 1894. Price 1*s*. 6*d*.

ENCAMPMENTS AND CANTONMENTS. Regulations and Instructions for. 1895 Price 9*d*.

ARMY REGULATIONS AND INSTRUCTIONS. In Force on 1st January, 1896. General Index to the. Price 1*s*.

ARMY BOOK FOR THE BRITISH EMPIRE. The. By Lieut.-General GOODENOUGH, R.A., C.B., and Lieut.-Colonel J. C. DALTON (H.P.), R.A. 1893. Price 5*s*.

(Wt. 4865 6200 7 | 96 – H & S 9333-4 & 7)

23 | 93 e. 165 (2)

Digitized by Google

MILITARY BOOKS, published by Authority—continued.

ARMY SERVICE CORPS:—

DRILL AND EXERCISES FOR THE. 1891. Price 2*s*.

DUTIES. Regulations for. 1893. Price 1*s*. 6*d*.

STANDING ORDERS. 1895. Price 1*s*. 6*d*.

SUPPLY HANDBOOK FOR. 1895. Price 3*s*.

ARMY ORDERS. General Orders, Regulations, and Instructions promulgated to the Army. Monthly. Price 3*d*.

COVERS FOR ARMY ORDERS. Price 9*d*. each.

AMMUNITION. Treatise on. 1892. 5th Edition. (*Under revision.*)

CARRIAGES, MILITARY. Treatise on. Fifth Edition. 6*s*.

CAVALRY DRILL. 1895. Two Vols. Price 9*d*. each.

CAVALRY DIVISION. THE. Troop Leading. Studies in. Price 5*s*.

CAVALRY. YEOMANRY. Regulations for. 1894. Price 1*s*. 6*d*.

ARTIFICERS. MILITARY. Handbook for. Seventh Edition. 1894. Price 3*s*.

FIELD ARTILLERY DRILL. 1893. Price 1*s*. (*Out of print.*)

GARRISON ARTILLERY DRILL. Vol. I. 1895. Price 1*s*. 6*d*.
Ditto, Vol. I. (Part 4), Drill. Price 6*d*. Vol. II. (Parts 1 to 5). 1891. Price 1*s*. 0*d*. each.

SIEGE ARTILLERY DRILL. 1896. Price 2*s*.

ARTILLERY. FIELD. Tactics of. 1887. 8vo. Cloth. Price 2*s*. 6*d*.

ARTILLERY. MUSEUM OF. In the Rotunda, Woolwich. Catalogue of. 1889. Price 1*s*. 6*d*.

ARTILLERY KIT PLATES. Nos. 1 to 10. Price 2*d*. each.

ARTILLERY AND RIFLE RANGES ACT, 1885. Byelaws made by Her Majesty's Principal Secretary of State for the War Department, with the consent of the Board of Trade. 8vo. Price 1*d*. each.
Aldeburgh Artillery Ranges. **Ash Rifle Ranges, Aldershot Camp. Landguard Foreshore and Sea at. Lydd and Dungeness Ranges. Middlewick Rifle Range. Millbrook Rifle Range. Orchard Portman Rifle Range. Scraps Gate Rifle Ranges. Shoeburyness Ranges. Southwold Foreshore and Sea Area. Warden Point Battery and Hurst Castle Artillery Practice Ranges. Wash: Foreshores of the.**

ENGINEERING. MILITARY. Instruction in. Compiled at the School of Military Engineering, Chatham. 8vo. Cloth.
Part 1.—Field Defences. 1896. (*In the press.*)
Part 2.—Attack of Fortresses. (*In the press.*)
Part 3.—Military Bridging and Use of Spars. Fourth Edition. 1894. Price 2*s*. 6*d*.
Part 4.—Military Mining. Fourth Edition. 1892. Price 2*s*.
Part 5.—Miscellaneous. Fourth Edition. 92 pp. 38 plates. Price 2*s*. 6*d*.

ENGINEERING. MILITARY. Manual of. Price 1*s*.

ENGINEER KIT PLATES. Nos. 1 to 6. 1893. Price 1*d*. each.

ENGINEER SERVICES, Regulations for. 1895. Price 2*s*.

ESTABLISHMENTS. FIELD ARMY. 1892. **Home Defence.** and Service Abroad. Price 2*s*. each.

FORTIFICATION AND MILITARY ENGINEERING. Text Book of. Part I. (1892). Price 5*s*. Part II. (1894). Price 6*s*.

INFANTRY. DRUM AND FLUTE DUTY for the Infantry Branch of the Army, with Instructions for the Training of Drummers and Flautists. From the authorised Sergeant Drummers' Manual. Horse Guards, War Office, 1st October, 1887. Price 2*s*.

INFANTRY DRILL. 1893. Price 1*s*. (*Out of print.*)

INFANTRY, MOUNTED. Regulations. Price 1*s*. 6*d*.

INFANTRY SWORD EXERCISE. 1895. Price 1*s*. (*Out of Print.*)

MEDICAL SERVICE. ARMY. Regulations for. 1896. Price 1*s*.

MEDICAL STAFF. Standing Orders for. In relation to the Medical Staff Corps. 1896. Price 1*s*. 6*d*.

Digitized by Google

MILITARY BOOKS, published by Authority—continued.

MEDICAL STAFF CORPS. Manual for the. 1894. Price 1*s.* 6*d.*

MILITARY COOKING. Manual of. 1895. Price 6*d.*

MILITIA. Regulations for. 1896. Price 1*s.*

MOBILIZATION FOR HOME DEFENCE (Regular Forces). Regulations for. 1894. Price 4*d.*

APPENDIX L. List of Militia, Yeomanry, and Volunteer Units, showing the allotment of each unit on mobilization. 1893. Price 2*d.*

MUSKETRY INSTRUCTION. Regulations for. 1896. LEE-METFORD RIFLE AND CARBINE. Price 9*d.*

ORDNANCE STORE SERVICES. Regns. for. 1890. Price 2*s.*

ORDNANCE. SERVICE. Treatise on. 1893. Price 10*s.*

PATHOLOGICAL SPECIMENS CONTAINED IN THE MUSEUM OF THE ARMY MEDICAL DEPARTMENT, NETLEY. Descriptive Catalogue of the. 8vo. 382 pp. 1892. Price 5*s.*

RATIONS. Soldiers. Lecture on Provision and Inspection of. 1892. Price 2*d.*

TACTICAL FITNESS OF MAJORS FOR COMMAND. Report on system adopted for testing, and on its results on. 1894. Price 9*d.*

TRUMPET AND BUGLE SOUNDS FOR THE ARMY. September, 1895. Price 2*s.*

VETERINARY SERVICES. ARMY. Regulations for. 1894. Price 1*s.* 6*d.*

VOLUNTEER CORPS. Purchase of Land by. 1893. Price 2*d.*

VOLUNTEER FORCE. Regulations for. 1895. Price 1*s.*

VOLUNTEER FORCE. Cash Accounts. Price 1*d.*

VOLUNTEERS in Brigade and Regimental Camps, or when encamped with the Regular Forces. Orders and instructions for. Revised, 1895. Price 1*d.*

STEAM ENGINES AND BOILERS. Notes and Memoranda on the Management of. 1891. Price 1*d.*

STORES. Priced Vocabulary of. Part I. 1893. Price 4*s.*

ADDENDA AND CORRIGENDA. 1895. Price 6*d.*

PART II. Naval Stores, &c. Price 3*s.*

DERRICKS, SHEERS and HOLDFASTS. 1893. Price 1*s.* 6*d.*

EXPLOSIVES. SERVICE. Treatise on. 1895. Price 2*s.*

GUNNERY, Text Book of. By Major G. MACKINLAY, R.A. Containing Parts I. and II., and Gunnery Tables. 1887. 342 pp. Price 4*s.*

GUNNERY TABLES. Collected and compiled by Major G. MACKINLAY, R.A., for the Text Book of Gunnery, 1887. 48 pp. Price 2*s.* 6*d.*

GUNS, Handbooks for, viz.:—

64-PR. R.M.L. Converted, of 58 and 71 cwt. 1892. Price 1*s.*
20-PR. „ of 16 cwt., on Garrison Sliding Carriage and on Travelling Carriage. 1892. Price 1*s.* 6*d.*
16-PR. R.M.L. of 12 cwt. (Land Service.) 1895. Price 1*s.* 6*d.*
12-PR. B.L. (Mark I.) „ 1895. Price 1*s.*
12-PR. of 12 cwt., Quick-firing „ 1896. Price 1*s.* 6*d.*
9-PR. R.M.L. of 6 cwt. and 8 cwt. „ 1892. Price 1*s.*
6-PR. Hotchkiss Quick-Firing. „ 1892. Price 1*s.*
12·5-inch R.M.L. of 38 tons. Marks I. and II. Land Service. 1893. Price 1*s.* 9*d.*
11-inch R.M.L. of 25 tons. 1892. Price 1*s.*
9·2-inch „ 1892. Price 3*s.*
9-inch R.M.L. of 12 Tons. Marks I. to VIc. Price 1*s.* 6*d.*

Digitized by Google

[*All Rights Reserved.*]

Equipment
1693

REGULATIONS

FOR THE

EQUIPMENT OF THE REGULAR ARMY.

PART 2.—SECTION XII.

GARRISON ARTILLERY.
SPECIAL INSTRUCTIONS AND DETAILS.

PEACE.

WAR OFFICE, 1896.

LONDON:
PRINTED FOR HER MAJESTY'S STATIONERY OFFICE,
BY HARRISON AND SONS, ST. MARTIN'S LANE,
PRINTERS IN ORDINARY TO HER MAJESTY.

And to be purchased, either directly or through any Bookseller, from
EYRE & SPOTTISWOODE, East Harding Street, Fleet Street, E.C.; or
JOHN MENZIES & Co., 12, Hanover Street, Edinburgh, and
90, West Nile Street, Glasgow; or
HODGES, FIGGIS, & Co., Limited, 104, Grafton Street, Dublin.

Price Seven Shillings and Sixpence.

Digitized by Google

BODLEIAN
6·1·1887
LIBRARY

(Wt. 4865 1625 8 | 96—H & S 9337

Digitized by Google

PART 2.

PEACE.

SECTION XII.—ARTILLERY.
SPECIAL INSTRUCTIONS AND DETAILS.

GARRISON ARTILLERY.

38407
Equipt.
1693

I.—SPECIAL INSTRUCTIONS.
II.—DETAILS OF EQUIPMENT.

I.—SPECIAL INSTRUCTIONS.

		PAGE
1.	Duties of Officers	3
2. 3. 4.	*Omitted. The instructions on the subjects dealt with in these sub-sections will be published hereafter.*	
5.	General Supply of Equipment	10
6.	Equipment for Armaments of Works and Garrison Artillery	14
7.	Equipment of Siege Artillery and Movable Armaments	23
8.	Articles for Drill and Instruction of Royal Artillery	23
9.	Practice Ammunition	25
10.	Tools	34
11.	Targets for Gun Practice and Instruction....	39
12.	Text Books, Handbooks, and Range Tables....	41
13.	Marking of Carriages, Wagons, &c., and Artillery Stores	43
14.	Repair and Preservation of Equipment, including Armament of Works	44
15.	Instructions for keeping Store Accounts in Royal Artillery Districts, and of certain Establishments	60
16.	Instructions for the Preservation, Inspection, and Fitting of Ordnance, Carriages, Turntables, Rope Mantlets, Lifting Jacks, &c.	64
Appendices		185

1.—DUTIES OF OFFICERS.

Half-yearly inspection of armaments.

1. In order to ensure that the ordnance, carriages, slides, ammunition, and stores forming the armaments in

Digitized by Google

charge of the Royal Artillery, are kept in a thorough state of efficiency, officers commanding Royal Artillery districts will make an inspection of the same twice a year

Report to be sent to G.O.C.

2. A special report on Army Form G 1083, on the result of these inspections will be made, in duplicate, on the 1st October in each year, to the general officer commanding, who will forward it, with his remarks thereon, to the War Office. This report will deal solely with the efficiency of existing armaments and equipments; it should be thoroughly considered at the station, and such local action taken as may appear possible and desirable; it should also draw attention to matters brought to notice in former reports, which remain still unsettled. A separate numbered paragraph will be allotted to each subject dealt with in the report. The local action taken should be briefly stated below the paragraph concerned. In the case of stores still due from the principal ordnance officer, Woolwich, to complete armaments, which have been demanded by the Royal Artillery for six months and over, a return on Army Form G 1085, showing the stores in detail with the Woolwich issue order quoted against them, should be furnished half-yearly, on the 1st January and the 1st July. Stores that can be supplied locally from the army ordnance department to meet deficiencies should be issued at once, and not entered on Army Form G 1085.

57 Gen. No. 5037

" 5648

57 Gen. No. 3746

38407 Equipt. 1590

57 Gen. No. 5037

Proposals for alterations in or new armaments.

3. Any alteration proposed in existing works or armaments, or any proposals for new works or armaments should be submitted separately, after being fully considered at the station. They should be accompanied by a joint report of the officer commanding Royal Artillery and the commanding Royal Engineer, and by such drawings and estimates as may be necessary for their consideration at the War Office.

4. The officer commanding Royal Artillery will arrange for one of these inspections to be made jointly with the district commanding Royal Engineer, as laid down in the Regulations for Engineer Services. This inspection should include all armaments, fortifications, and buildings connected therewith in the district, when an opportunity will be afforded of considering and discussing on the spot, the requirements of the defence and the manner in which they should be met.

57 Gen. No. 2701

Artillery district store accounts.

5. Officers commanding artillery districts will cause accounts to be kept and rendered in accordance with the detailed instructions for keeping these accounts as given in paragraphs 248 to 269.

Headquarter staff of R.A. districts and R.A. staff clerks.

6. The arms, accoutrements, tools, saddlery, and other equipment, for use of the headquarters staff of Royal Artillery districts, the equipment of Royal Artillery Staff Clerks, and tools supplied under paragraph 247,

54 Artillery 1372

Digitized by Google

38407
Equip.
1528

Part I, will be demanded by the officer commanding the depôt company, or where no depôt exists, by a service company of garrison artillery in the district to be detailed by the officer commanding Royal Artillery.

54
Artillery.
3054

7. Non-commissioned officers and men of the District Establishment will be supplied with arms and accoutrements by the service company or companies in the district to which they are permanently attached for duty. Arms and accoutrements for district establishments, &c.

The arms and accoutrements in possession of the following warrant and non-commissioned officers, viz. :—

Master Gunners,
Serjeants-Major,
Superintending Clerks,
Quarter-Master Serjeants,
Military Staff Clerks,
Orderly Room Serjeants,
Serjeant Trumpeters,
Sergeant-Instructors in Gunnery,
Serjeant Cooks,
Armament Artificers,

will be accounted for by the depôt or service company in the district to which they are attached. All new sets required will be supplied by the Army Ordnance Department duly marked. The necessary information as regards marking each set will be obtained from the officer commanding, Royal Artillery regimental district staff, Woolwich, and will be stated on the requisition. Once issued, they will remain in the possession of, and be taken away on transfer by, the warrant or non-commissioned officer, so long as he is entitled to such equipment. In cases of promotion necessitating a change of equipment, or when a man becomes non-effective from any cause, the arms and accoutrements will be returned to the nearest Ordnance store for disposal, and a report of the same made by the officer handing in the equipment, to the officer commanding Royal Artillery district staff, Woolwich.

Digitized by Google

[*Paragraph* 8 *to* 40 *have been omitted. The instructions on the subjects dealt with in those paragraphs will be published hereafter.*]

5.—GENERAL SUPPLY OF EQUIPMENT.

Estimates for Equipment.

Artillery estimates.

41. The annual estimates for artillery services will be prepared in a consolidated form by the O.C.R.A. as follows:—Stores required to keep up the proportions authorised for the armament of existing works, on Army Form G 800. Stores required for all services other than the armament of works, on Army Form G 801.

57
D'port.
3701

Estimates for armaments of new works.

42. A separate estimate on Army Form G 800 will be prepared by the officer commanding Royal Artillery for all stores required for the armaments of new works. Armaments for new works will not be estimated for until the officer commanding Royal Artillery at the station has received instructions to that effect.

Stores to be kept distinct in artillery estimates.

43. Officers commanding Royal Artillery, in preparing their annual consolidated estimates, will show in detail the positions of the pieces mounted in works; the number of rounds of ammunition for each piece in their charge; and the nature and number of dismounted ordnance in charge, with the reasons why they are dismounted, as well as all other information required by the forms. A detail will likewise be supplied by the officer commanding Royal Artillery to the chief ordnance officer, with the annual estimate, showing the numbers, nature, and descriptions of the guns, carriages, slides, projectiles, and stores which it is proposed to paint during the following year;

Digitized by Google

also all changes in the armaments, and in the proportions of ammunition held in Royal Artillery charge, occurring since the last estimate, quoting the authority under which such changes have been made.

Ammunition for militia and volunteer artillery.

44. Officers commanding artillery districts will make provision in their annual estimates for gun ammunition for practice and exercise of the militia and volunteer artillery in their respective districts.

Orders with regard to additional guns.

45. Additional guns or guns of different calibre, either for increasing or changing the armaments, will only be demanded, and their equipments estimated for, after the addition or alteration shall have been finally approved by the Secretary of State, and notified to officers commanding Royal Artillery.

Stores for ordnance about to be withdrawn.

46. Estimates for stores will not be made on account of ordnance about to be withdrawn from the defences within the year for which the estimates are framed.

Requisitions for Equipment.

Requisitions for new armaments.

47. Requisitions for new armaments based upon the approved estimates will be put forward by the officer commanding Royal Artillery separately on the prescribed forms, and rendered in duplicate to the chief ordnance officer of the station.

Return of Ammunition into Store and Destruction of Shells.

Return to store of shells and cartridges.

48. Except under special circumstances, shells which are filled will invariably be emptied before being returned to ordnance charge. When filled cartridges are to be returned to store, the officer commanding Royal Artillery will ascertain from the Army Ordnance Department whether they are to be returned intact, or are first to be broken up.

57
Devonport
4794

Newest ammunition and stores to be returned.

49. When returning ammunition or combustible stores to the Army Ordnance Department intact from any work the newest ammunition and stores of the specified nature to be sent in on charge in that particular work will be returned; those of earlier dates being retained and used up as opportunities offer.

Shells and cartridges to be emptied by R.A.

50. The emptying of filled shells, and breaking up of filled cartridges, prior to their return to store, is performed as a duty by the Royal Artillery, and the Army Ordnance Department will provide any barrels that may be required to receive the gunpowder. Powder from shells will be wetted as laid down in the Magazine Regulations before being returned to store. Where there is no ordnance store the powder obtained from shells which have been emptied for the purpose of being fired plugged, under

Digitized by Google

paragraph 156, will at once be destroyed under the orders of the officer commanding the company employed in emptying them.

Hoops to be returned with empty barrels.

51. When powder barrels are emptied, all hoops which remain serviceable are to be replaced on the barrels. Such hoops as are broken or damaged will be returned into store with the empty barrels.

Barrels not to be stripped.

52. Under no circumstances are powder barrels to be stripped of their wooden hoops.

Search for projectiles after artillery practice.

53. Immediately on the close of artillery practice each day, search will be made on the ranges for unexploded projectiles. The plugged shells and shot which are found will subsequently be handed over to the army ordnance department, but all blind fuzed shells will be destroyed where found as laid down in the following instructions:—

Mode of destruction of shells by guncotton.

a. In order to limit, as far as practicable, the possible projection of fragments of shells which are submitted to this treatment, the shell to be operated upon should, in the first place, be entrenched on all sides by throwing up the adjacent earth, sand, or fine shingle round it to a height at least double that of the shell.

b. A 1½-lb. slab of wet guncotton is to be placed upon the shell, and a dry guncotton primer with detonator, electric (previously coupled up with the conducting wires leading to an exploder, with which these are afterwards connected), is placed upon the charge of wet guncotton.

c. A bag loosely filled with sand or dry earth is placed over the charge thus arranged, care being taken not to disarrange the conducting wires which are connected with the detonator. The bare portions of the connections of the wires with the detonator must be carefully kept from contact with each other and with the earth. The shell should then be covered over with one or more of the remaining bags.

d. When these preparations are complete, and the operators and all persons present have retired under cover (or if no cover is available to a distance of from 800 to 1,000 yards), the conducting wires are connected with the dynamo-exploder, and the charge is detonated.

e. The officer conducting the operation will see that the directions in *d* are carried out.

Stores for destruction of shells.

54. A set of stores for the destruction of shells, together with such quantity of guncotton and detonators as may be considered necessary, will be allowed to all land ranges, and will be demanded in the undermentioned proportions and accounted for by the officer commanding Royal Artillery in camp:—

Digitized by Google

MATERIALS REQUIRED FOR EACH CHARGE.

Woolwich Store Charge No. 2.

	No.
Bags, sand, common	4

Woolwich Store Charge No. 21.

		No.
Guncotton	dry primers, one perforation, $1\frac{1}{4}$ in. × $1\frac{1}{4}$ in.	1
	wet slabs, two perforations, $6\frac{1}{8}$ in. × $6\frac{1}{8}$ in. × $1\frac{1}{8}$ in.	1

Woolwich Store Charge No. 22.

Detonators, electric, No. 13....	1

STORES.

Articles.	No.	Remarks.
Woolwich Store Charge No. 7.		
Cloth, emery, fine ... ... sheets	6	Cleaning ends of wire.
Woolwich Store Charge No. 8.		
Pliers, side cutting, 7-inch ... ... pairs	1	
Woolwich Store Charge No. 18.		
Twine, choking, 3-thread ... ... lb.	1	Securing charge.
Woolwich Store Charge No. 28.		
Exploders, dynamo-electric, F.S.	1	
Tools and materials, submarine mining—		
Tape, indiarubber ... ... lbs.	½	Repairing of defective wire.
Tools, jointers, telegraph—		
Knives, paring, telegraph jointers ...	2	
Solution, indiarubber, ½-lb. tins	1	Repairing of defective wire.
Woolwich Store Charge No. 29.		
Wire, covered, C 8 ... ... yards	2,000	Old field telegraph cable, unfit for general issue, would do if available.

38407
Equipt.
1590

55. The regulations for packing and storing guncotton and detonators will be strictly observed (*see* Part III, Magazine Regulations), and where there are no suitable buildings or sheds available for storage, tents will be used for the purpose. Packing and storage of guncotton and detonators.

56. Rewards will be paid for the recovery of projectiles and gas checks as laid down in the Regulations for Ordnance Store Services. Recovery of projectiles and gas checks.

Digitized by Google

6.—EQUIPMENT FOR ARMAMENTS OF WORKS AND GARRISON ARTILLERY.

Instructions for the Maintenance of Armaments.

Details of equipment.

57. Details of the equipment of armaments of works will be found in the Details, pages 296 to 451, and of Garrison Artillery at pages 682 to 710.

Armaments fixed by Secretary of State.

58. The armaments of works of defence are determined by the Secretary of State, and no changes affecting such armaments will be made, except in cases of emergency, when the general officer commanding may take such measures as the necessities of the service demand, reporting his proceedings to the War Office. 38407 Equipt. 1530

Artillery matériel Reports, &c.

59. All reports and returns relating to artillery matériel, will be rendered as laid down in the Queen's Regulations.

Testing new armament.

60. As new guns are mounted in works, or when guns are dismounted and removed from an old emplacement and remounted in a new or remodelled emplacement, three rounds with projectiles, the first round being with half charge in the case of the B.L., and reduced charge in the case of R.M.L., will be fired from each R.M.L. gun of 6½ tons and upwards, and each B.L. gun of 6-inch and upwards, to test the mountings, gear, and emplacements, and the general working and fighting condition of the gun. In cases, however, where guns are so mounted that service projectiles could not with safety be fired, paper shot will be used. This firing test will also be utilized, with B.L. guns 6-inch and upwards, for expanding the obturating pads and discs which are issued unexpanded, as directed in the special instructions issued to stations for the purpose. One round will be sufficient to expand one obturator. 38407 Equip. 1482 38407 Equip. 1482

Expanding obturating pads.

Under whom carried out.

Record of joint inspection.

61. This trial should be carried out under officers appointed by the officers commanding Royal Artillery and Royal Engineers in the district, and all the particulars regarding the guns, mountings and gear, emplacements, ammunition service, &c., will be carefully noted by these officers, and embodied in a special form of record, which is to be considered strictly confidential.

Superintendence of testing armaments, &c.

62. When mountings have not been proved before issue, the three rounds ordered in paragraph 60 (and such other rounds as may be necessary, to be taken from the armament equipment) will be fired under the superintendence of the inspector of carriages when practicable. Application for instructions for the first firing from any mountings should be made to the War Office. Officers of Royal Artillery and Royal Engineers should be appointed to attend this firing for the purpose of noting 52 Sheerness. 2124 38407 Equipt. 1530

Digitized by Google

all particulars regarding the gun and mounting, and preparing the record alluded to in paragraph 61.

63. This "record of joint inspection" will be compiled with extreme exactness and in accordance with the instructions printed on the back of the form. It will receive the approval of, and be rendered in duplicate to the War Office by, all general officers commanding districts in which armaments of heavy rifled guns are mounted. One copy being for the use of the inspector general of fortifications, and the other for the use of the inspector general of ordnance. Copies will also be kept in the offices of the officers commanding Royal Artillery and Royal Engineers. How compiled and rendered.

64. The records will be examined annually by these officers and corrected up to date. A joint certificate that this examination has been made, together with a copy of each corrected or additional entry, will be furnished annually on the 1st of April to the War Office, as directed in paragraph 4 of the instructions on the back of the form. Corrections and additions.

65. In addition to the "record of joint inspection," and in order to maintain a complete record of the whole of the armaments for land service, a "joint armament return" of all ordnance forming the armament of works, and having a plan attached showing all emplacements, will be compiled by the officers commanding Royal Artillery and Royal Engineers in each district. This return will be rendered as directed in paragraph 63, and will also be considered strictly confidential. Joint armament returns.

38407
Equipt.
1530

66. On the 1st April in each year, a list of any alterations and amendments that may have become necessary in the return since the previous report, will be furnished to the War Office. Alterations and amendments.

67. All ordnance mounted on the defences, as well as all dismounted ordnance lying within the precincts of the batteries for which the commanding officer Royal Artillery is responsible, and all magazines containing any gunpowder in charge of the artillery, will be in charge of the Royal Artillery. All other ordnance and gunpowder will be in charge of the Army Ordnance Department. Ordnance and magazines in charge of R.A. and O.S.D. respectively.

68. Instructions for the arrangement of stores in a work, are laid down in Appendix II., pages 206 and 207. Arrangement of stores.

69. In order that there may be no divided responsibility between the Royal Artillery and the Army Ordnance Department as to the maintenance of the proportions, the following rules will be observed :— Rules to be observed to avoid divided responsibility.

(*a*) When there is not sufficient accommodation in a work for the whole of the proportions being kept by the Royal Artillery, that which cannot be retained by the Royal Artillery is to be kept in charge by the Army Form G 908

Digitized by Google

Army Ordnance Department, the chief officer of which will be held responsible that the respective proportions are kept separate, complete, and ready for immediate issue. It is to be understood that these equipments, whether in charge of the Royal Artillery or the Army Ordnance Department, are independent of any reserves which it may be considered expedient to maintain at the station in charge of the Army Ordnance Department.

A statement of the above distribution, showing in detail the authorised armaments of the district, with the full proportions of carriages, side-arms, ammunition, and all stores to be maintained for each and every fort, will be prepared for the approval of the general officer commanding by the officer commanding Royal Artillery and the chief ordnance officer in concert, in duplicate on Army Form G 908. One copy will remain with the officer commanding Royal Artillery, another with the chief ordnance officer.

To be prepared in duplicate.

Responsibility for maintenance of proportions.

(*b*) The officer commanding Royal Artillery and the chief ordnance officer will be held responsible that the proportions to be kept up by each are duly maintained, and that all expenditure and exchanges are provided for in their respective estimates.

Amendments to G 908.

(*c*) All amendments rendered necessary by changes in armaments, &c., should be duly noted in the Form G 908, which should at all times be kept up to date; the chief ordnance officer being consulted from time to time as to the stores maintained in his charge.

57 Colchester 3897

Spare parts, how held on charge.

(*d*) The spare parts of guns, carriages, and slides for forts or batteries (*see* details pages 454 to 677) will be held on charge by the Royal Artillery.

Those allowed per district or sub-district may be either held on charge by the Royal Artillery or kept by the Army Ordnance Department, as may be found most convenient.

Definition of the word "district."

70. The word "district" throughout the detailed tables of proportions will be understood to mean the extent of an artillery command in the United Kingdom or that of a station abroad.

Armament district.

71. The term "armament district" is used to define the extent of the charge of an accountant.

Sub-district.

72. The term "sub-district" is used to define the charge of a sub-accountant. A sub-district consists of one or more works grouped together, for convenience of administration and supervision, under a master gunner or acting master gunner.*

57 Gen. No. 4970

* In exceptional cases it may be found that the detailed table of stores allowed per sub-district does not quite fulfil, or in some instances exceeds, the requirements of the sub-district; such cases should, after the fullest consideration locally in connection with the Army Form G 908, be forwarded for War Office decision.

57 Gen. No. 4970

Digitized by Google

General supplies to batteries.

73. Articles of which the application is general and irrespective of the nature of ordnance, and which are supplied in certain proportions to each battery, will be demanded in the same amount, whether the armament of a battery comprises one or several classes of ordnance. In preparing requisitions for this class of stores, the local signification of the word "battery" must sometimes be departed from, and the entire armament of an enclosed fort, or of a portion of a line of defence, not too extensive for the convenient use of the stores, will be treated in all respects as though the pieces formed a single battery.

Signification of the word "battery."

Grouping of forts and batteries.

74. Forts and batteries can often be grouped together according to their importance and situation, in such manner that, as regards stores, a considerable reduction in the numbers laid down may be made with advantage. The same arrangement should be followed in respect of laboratories and their stores, the selection of the laboratories to be equipped being made with reference to such grouping.

Not governed by nature of ordnance.

75. Articles of which the application is general and irrespective of the nature of ordnance, but which are supplied in proportion to the number of pieces, will be demanded on the general aggregate of the ordnance in the district for which the demand is made, without regard to the nature of the ordnance.

Certain supplies by districts of stations.

57
Devonport
5104

76. Articles, such as knock-up wrenches, transporting axle-trees, drugs, sling wagons, &c, of which the use is more or less general, are supplied for each district, station, or sub-district, and are not to be demanded for each nature of armament, although they may appear in more than one of the tables of equipment, pages 296 to 442.

Stores for ordnance used for saluting, &c.

77. Ordnance used exclusively for saluting and signalling purposes, and time guns, will only be allowed such stores as are sufficient for carrying out the particular service.

Guns used for salutes and dismissal of recruits.

78. The guns to be used for salutes, where authorised, and for dismissal of recruits, will be decided on by the general or other officer commanding the troops at the station, subject to confirmation by the Secretary of State. Whenever the guns selected for these services are not of the smallest available calibre, the reasons for the selection will be given. The minimum number of guns from which a salute may be fired is laid down in the Queen's Regulations.

Proportions of Cartridges and Projectiles.

No. of rounds of ammunition to be maintained for armaments.

79. The number of rounds of ammunition to be maintained for armaments at home and abroad for rifled and smooth-bore ordnance will be in accordance with the following tables :—

Digitized by Google

RIFLED.

	Home.	Abroad.
Fortresses.		
13·5-in. B.L. guns ...	100 rounds each piece	100 rounds each piece.
Other B.L. guns... ...	100 ,, ,, ,,	200 ,, ,, ,,
17·72-in. and 16-in. R.M.L. guns	100 ,, ,, ,,	100 ,, ,, ,,
Other R.M.L. guns and howitzers	100 ,, ,, ,,	200 ,, ,, ,,
R.B.L. guns	100 ,, ,, ,,	200 ,, ,, ,,
Movable Armaments † ...	100 ,, ,, ,,	200 ,, ,, ,,
Siege Train Companies...	200* ,, ,, ,,	—

* 100 to be kept filled in Royal Artillery charge, and 100 empty in army ordnance charge.
† Not including Q.F. and machine guns.

38407 / Equip. / 1463

SMOOTH BORE.

Home, 50 rounds each piece.
Abroad, 100 ,, ,, ,,

32-pr. S.B. B.L. guns { Home, 25 rounds per gun. / Abroad, 50 ,, ,,

75 / 12 / 4453

QUICK FIRING ORDNANCE.

512 rounds per gun for 3-pr. (32 boxes).
506 ,, ,, ,, 6-pr. (46 boxes).
400 ,, ,, ,, 12-pr.
300 ,, ,, ,, 4·7 inch.

57 / Gen. No. / 4696

MACHINE GUNS.

0·4 inch, 10,200 rounds (15 complete boxes) per gun.
0·45 inch, 10,440 rounds (18 complete boxes) per gun.
·303 inch 11,000 rounds (10 complete boxes) per gun.

75 / 3 / 6705

Cartridges and shells be maintained filled.

80. All cartridges and shells in charge of the Royal Artillery, except those for S.B. ordnance (*see* paragraphs 82 and 83), will be kept filled as far as store accommodation will admit.

Proportion in forts when expense magazines are near buildings.

81. At forts where the expense magazines are contiguous to other buildings, the proportion of filled cartridges and shells is not to exceed two rounds a gun, provided that a further supply of filled cartridges and shells can be stored at a convenient distance from the fort.

Cartridges for S. B. ordnance.

82. 10 cartridges a piece for S.B. ordnance will be kept filled in Royal Artillery charge. All to be filled for 32 pr. S.B., B.L.

38407 / Equip. / 1463

Loose Powder.

83. The only loose powder that is to be kept in Royal Artillery charge will be that required for S.B. guns in excess of the 10 rounds a gun ordered to be kept filled

Digitized by Google

by paragraph 82, and that required for powder-horns, S.B. shells, and shells for rifled ordnance that cannot be kept filled.

84. In cases where it is found, from circumstances connected with insufficient store accommodation, or for other reasons, that the orders contained in paragraphs 79 to 83 cannot be carried out, officers commanding Royal Artillery will report specially on the subject, through the general officer commanding, to the War Office. Insufficient store accommodation to be reported.

Proportions of Fuzes and Tubes.

85. The proportions of fuzes and tubes to be maintained for garrison ordnance, will be as laid down in the details for armaments. Reference to the detailed instructions.

86. In demanding fuzes, tubes, primers, and other laboratory stores supplied in sealed cylinders, the numbers given in the details of equipment will be adhered to as closely as possible; but, in order to avoid the deterioration caused by unsealing cylinders for the issue of fractional parts of their contents, these numbers may be increased by the excess contained in one cylinder. All cylinders will therefore be issued full. Supply of fuzes, tubes, and laboratory stores.

87. The whole of the fuzes and tubes forming portion of the equipment will be kept by the Royal Artillery in the works to which they are appropriated.

57 Gen. No. 2853

88. Thoroughly dry stores should alone be used for the storage of fuzes and tubes, and subject to this condition any convenient place, not a magazine or cartridge store, which is secure may be used.

57 Gen. No. 2853

89. Should the store accommodation existing in a work not fulfil the conditions laid down in paragraph 88, then such proportions of fuzes and tubes as cannot be accommodated under those conditions will be kept in ordnance charge ready for immediate issue. The officer commanding Royal Artillery, and the chief ordnance officer will see that they are correct in quantity and condition.

57 Gen. No. 2853

38407 Equip. 1463

90. In the event of war, the whole of the fuzes and tubes should be transferred to Royal Artillery charge and placed with the guns. In war all to be with the guns.

91. Cylinders containing the articles enumerated in paragraph 86, will on no account be opened, unless their contents are required for immediate use. Cylinders not to be opened till wanted.

92. When cylinders have been opened for immediate use and their contents have not been used up, they will be returned to the Army Ordnance Department, and complete cylinders will be issued in their place. In the case of tubes, however, those opened for time guns will be used up, and, as far as practicable, the tubes used for drill at general manning of work (50 per group of guns allowed Open cylinders to be replaced.

57 Gen. No. 3031

Digitized by Google

by paragraph 129) will be taken from opened cylinders. Any opened cylinders then remaining, the tubes in which would not be required for immediate use, will be treated as directed above.

Detonators, &c., to be returned properly packed.

93. Detonators, fuzes, or tubes, especially those containing fulminate, will be returned into store properly packed.

Instructions as to Miscellaneous Stores.

Range-finders.

94. Depression range-finders are allowed for coast batteries, and a list of such works, with the proportions approved for each, and instructions for the care and preservation of these instruments, will be found in Appendix III. (pages 208 to 227).

War rockets.

95. War rockets will not be maintained as a portion of any equipment. They will only be employed under special circumstances.

Special stores for landing, mounting, &c., guns.

96. Lists of gear and stores for landing, transporting, mounting, and dismounting guns of 18 to 47 tons, also special sets for guns of 80 and 100 tons, will be found in Appendix I. (pages 186 to 204), and are supplied to districts, as laid down at page 205. These stores will be available for the general requirements of the forts in the district, and will be kept in Royal Artillery or army ordnance charge as directed. Care will be taken that the gear, &c., is kept in proper order, and is at all times ready and fit for use. To ensure this, and also that the men who would have to use the gear have a practical knowledge of its working, the officer commanding Royal Artillery will from time to time exercise the men in its use.

Hydraulic buffers.

97. In all cases where guns are mounted on carriages and slides fitted for hydraulic buffers, the buffer will invariably be kept on the slide filled with the proper quantity of oil, and the piston rod kept connected to the carriage; but in cases where guns are found to be especially hard to run back, and such guns are likely to be much used at drill, the officer commanding Royal Artillery may order the piston rods of such guns to be disconnected, provided such instructions be given as will ensure proper precautions being taken to prevent the gun taking charge in running up. When works, however, are under repair, or persons other than the artillerymen actually in charge, have access to places where guns having hydraulic buffers are mounted, the officer commanding Royal Artillery will use his discretion in having the buffers temporarily emptied, but they must be refilled as soon as possible.

57
Gen. No. 3351

Rope mantlets.

98. When rope mantlets have been fitted to shields, and have been found complete and in good working order, on the joint inspection of the officer commanding Royal Artillery and commanding Royal Engineer, they will be

Digitized by Google

taken on charge by the officer commanding Royal Artillery, who will be responsible that they are kept in a safe condition and at all times ready and fit for use; he will therefore make requisitions in the usual manner upon the Royal Engineer department to carry out any repairs, and also for the necessary application of a solution of chloride of calcium. For instructions for care and preservation *see* paragraphs 637 to 644.

38407 Equip. 1463

99. The instructions contained in paragraph 98 will also apply in the case of the rope mantlet doors issued for use in powder magazines and cartridge stores to certain stations at home and abroad (*see* also paragraph 645). Rope mantlet doors for magazines.

57 Ceylon 718

100. Rope mantlets, according to pattern required, will be provided and fitted for all guns actually mounted behind iron protection.

101. In the case of open batteries, however, in which mantlets, when hung, would be fully exposed to the weather, and therefore liable to rapid deterioration, they will be kept in store in time of peace, and will be hung only when required for drill or practice, or for actual service in time of war. Keeping mantlets in store.

102. Racers, pivots, traversing racks, and traversing arcs will be demanded and fixed by the commanding Royal Engineer. Demands for racers, &c.

103. Pivot plugs and pivot pins for 32-pr. S.B.B.L. guns for flank defences, will be demanded by officers commanding Royal Artillery districts, through the local ordnance officers. Demands for pivot plugs and pins.

57 Hong Kong 8991

104. When the works are completed, the racers, pivots, traversing racks, and traversing arcs will be taken over by the officer commanding Royal Artillery, and entered on an inventory of fixtures in accordance with the Regulations for Engineer Services. Circular bearing-plates and holding-down screws, issued with R.M.L. high-angle carriages, will be similarly dealt with. Charge of above.

105. The approved patterns of racers, pivot blocks, and pivot plugs for guns are shown in Appendix VII. (pages 232 to 237), and of traversing racks, traversing arcs, and pointers, in Appendix VI., pages 230-231. Approved patterns of above.

106. The graduations are numbered as required in each case, according to the position and character of the emplacement for which the arc is intended. The numerals range between 0 and 359, inclusive, and read from left to right. Graduations of arcs.

57 Pembroke 2638

107. In order to prevent accidents to vessels, &c., and to facilitate practice, a red flag will be issued to all batteries used for practice by either Regular, Militia, or Volunteer Artillery. Where two or more batteries are however grouped together, only one of which is usually practised from at a time, one flag should be sufficient for the group. Issue of red flag to practice batteries.

Digitized by Google

Position-Finders.

Position-finders instalment.

108. Position-finders are installed in the more important coast defence works (armed with heavy guns), as approved. 57 Gen. No. 5010

109. A list of stores used in connection with position-finding will be found at pages 678 to 680.

As the detail of stores varies with the different descriptions of position-finders in use, officers in charge of such instruments will be careful that each is kept complete with its own special equipment of stores.

Issue and repair.

110. Position-finders and their equipment are, in the first instance, issued by the chief inspector of position-finding direct to works as may be specially authorized. When any stores in connection with position-finding require repair, they will, if such repairs cannot be carried out locally, be sent through the chief ordnance officer to the principal ordnance officer, who will transmit them to the chief inspector of position finding ; they will be returned through the same channel. Local repairs should only be carried out by the armament artificers specially appointed for the duty.

Return of empty cases.

111. Cases which have been issued to stations at home containing position-finders will, when empty, be labelled "empty," and then returned to the chief inspector of position-finding through the principal ordnance officer. 57 Gen. No. 5642

111A. Cases containing position-finders which have been issued to stations abroad will, when empty, be retained at the station for use in the event of it being found necessary to return position-finders to Woolwich. 57 Gen. No. 5642

112. Cases containing position-finding stores, and Le Clanché cells, will, when empty, be returned to the Army Ordnance Department in the same way as any other packing cases which it is desired to clear off charge.

113. Should it be necessary to return a position-finder, or portions of the instrument, to the Army Ordnance Department for transmission, through the principal ordnance officer to the chief inspector of position-finding, the cases will be carefully labelled "Delicate instruments—with great care."

Schedules.

114. Forms of schedules (A and B) for schemes of position-finding have been drawn up. Copies of these will be kept by the general officer commanding, the officer commanding Royal Artillery, and the commanding Royal Engineer of districts, who will be responsible that they are at all times kept up to date. 57 Portsmouth. 2987

Blank schedules can be obtained from the chief inspector of position-finding, Royal Arsenal, Woolwich. They will be issued in outside and inside sheets—

Digitized by Google

Schedule A has reference to arcs of fire, arcs of view, bearings, &c.

Schedule B has reference to the state of completion of the scheme.

7.—EQUIPMENT OF SIEGE ARTILLERY AND MOVABLE ARMAMENTS.

Details for siege artillery

115. Details of the equipments for Siege Artillery will be found in the Siege Artillery Drill.

Distribution of siege companies.

116. Siege train companies are located at the following stations :—

Dover---Portsmouth—Plymouth.

Details of equipment.

117. Details of the equipment for these companies will be found at page 434 to 442.

Accounting for equipment.

118. The guns and stores forming the equipment of these companies will be in the charge of, and will be accounted for by, the officer commanding the company.

Movable armaments.

119. Movable armaments, which are divided under two heads, viz. :—

(1) Movable—Guns and howitzers on travelling carriages, of which the weight exceeds 50 cwt. behind the team,

(2) Mobile—Guns on field and mountain carriages, of which the weight does not exceed 50 cwt. behind the team,

form part of the defensive armament of districts. The same number of rounds will be kept filled in Royal Artillery charge for these pieces as for guns in works ; and in the case of the 13-pr. R.M.L. at Malta, and the 7-pr. R.M.L. at Sierra Leone, a special reserve of 100 rounds per gun will be held in Army Ordnance Charge, in addition to the 200 rounds maintained as the equipment of the guns.

57
Gen. No.
5043

Details of equipment of movable armament will be found in Table 21, pages 407 to 433.

Range-finders allowed.

120. Large Watkin field range-finders are allowed to movable armaments in such proportions as are considered necessary, according to the grouping of the guns. Instructions concerning these instruments will be found at page 225.

Harness, supply of.

121. Harness supplied under special authority for the service of movable armaments will be held in army ordnance charge, and only drawn from store when required. At some stations local arrangements are made to hire such harness as may be required.

57
Devonport
5259

8.—ARTICLES FOR DRILL AND INSTRUCTION OF ROYAL ARTILLERY.

Proportion.

122. The proportion of stores allowed to Royal Artillery for gun drill, are included in the details for staff and service companies (*see* pages 688 and 689).

Digitized by Google

Stores for laboratory instruction.

123. Stores for laboratory instruction are allowed to the Royal Artillery stations shown in Appendix IV. (page 228), and a detail of the stores comprising a set is given in pages 699 to 701.

Additional stores for certain R.A. districts.

124. Stores are allowed in addition for heavy gun drill and instruction to Royal Artillery districts where instructors of gunnery are appointed (*see* list at pages 690 to 698).

Proportion of drill stores for district establishments.

125. N.C.O.'s and men of the district establishments will participate in the use of all drill stores and laboratory stores allowed for the instruction of service companies.

38407
Equip.
1502

Electric stores for position-finding.

126. Stores for instruction in electricity are allowed to certain stations where position-finding has been installed (*see* list on page 687).

Stores to be maintained at head-quarters.

127. With the exception of the unserviceable fuzes supplied annually to companies, the proportion of stores allowed to garrison artillery will be maintained at the head quarters or at out stations.

Fuzes for instructional purposes.

128. At stations abroad, if there are no unserviceable fuzes for instructional purposes in possession of the Royal Artillery or Army Ordnance Department, service fuzes which have been longest in Royal Artillery charge, will be used, and they will be replaced from the ordnance stores.

Tubes for manning of works.

129. The following tubes will be allowed annually for expenditure at general manning of works :—

57
Gibraltar
4990

For guns in connection with Position-finding

50 vent-sealing electric tubes per group of B.L. guns, and R.M.L. axial-vented, and 9-inch Mark VI guns.

73
3
5848

50 electric tubes, No. 11, per group of heavy R.M.L. guns except axial-vented, and 9-inch Mark VI guns.

For guns not in connection with Position-finding.

50 vent-sealing percussion tubes per group of B.L. guns.

50 copper friction tubes per group of heavy R.M.L. guns, except axial-vented, and 9-inch Mark VI guns.

Repriming electric drill tubes.

130. Vent-sealing electric drill tubes will be reprimed and rebridged after each time of firing; the electric tube No. 11, will also be reprimed after each time of firing, and rebridged as required. This operation will be performed under the superintendence of the officer of the staff for the inspection of warlike stores at the stations where these officers are appointed. At stations where there is no inspector, and there is no other officer of the Royal Artillery on the spot qualified to perform the operation, the tubes must be sent to Woolwich to be reprimed. Instructions for performing the operation will be found in Appendix XII. (page 293).

73
3
5848
57
Gen. No.
3331
7615
102

Digitized by Google

9.—PRACTICE AMMUNITION.

Garrison Artillery.

57
Genl. No. 3464

131. The annual practice of garrison artillery is comprised under the various heads referred to in the following instructions:— Allowance of ammunition.

132. With a view of improving the instruction of the Royal Artillery, each station will be allotted the money value of the ammunition allowed for practice (including ammunition for aiming tube) and the expenditure of the same will rest with the officer commanding Royal Artillery, under the orders of the general officer commanding the district. Care should be taken that the money is expended with due regard to Money value.

1. The elementary instruction of the companies.
2. The requirements of station and half-yearly practice, which must be strictly adhered to.

V.
Art. Gen. No. 3752 7615 93

The full allowance must be expended during each financial year, and no portion of it carried over from one year to the next, except at the schools of instruction, without War Office authority for so doing.

7615
93

133. At the schools of instruction, should any ammunition remain unexpended at the end of the year it may, at the discretion of the officer commanding Royal Artillery in the district, be carried forward for use in the following year, in addition to the annual allowance. Ammunition for schools of instruction.

134. After providing for elementary instruction, the scheme of practice for each year should be so arranged that it is carried on under strictly service conditions, and in accordance with a definite tactical scheme suited to the locality (*vide* paragraph 155). Annual scheme.

Station Practice.

57
Gen. No. 3464

135. At station practice all R.M.L. guns, 7-inch to 12·5-inch, and all B.L. guns, 6-inch and over, which are mounted on sliding carriages and slides, and which are so mounted as to be capable of being fired with safety, will be fired three times consecutively every second year. When practice is to take place.

57
Portsmouth 2624
57
Portsmouth 2964

136. In the case of B.L. guns on disappearing carriages, and R.M.L. guns on high-angle carriages, immediately after the annual cleaning of the cylinders, two full charges will be fired consecutively, and six months later two more full charges. Palliser shot or cast-iron common shell will, if available, be used for this purpose. Practice from guns on disappearing carriages.

137. If, when the biennial station practice or half-yearly practice in the case of B.L. guns on disappearing carriages, and R.M.L. guns on high-angle carriages, for any fort is due, any entire group of guns has been, When exempt from station practice.

Digitized by Google

or is about to be, used for regimental practice, such group will be exempt from station practice. (*See* paragraph 150.)

Practice from 17·72 and 16-inch guns.

138. The 17·72-inch R.M.L. guns at Gibraltar and Malta will be fired four times consecutively every half year, and the 16-inch R.M.L. guns at Dover three times consecutively every half year.

Projectiles to be used.

139. The projectiles to be fired from guns other than those mentioned in paragraph 136 will be iron projectiles. Steel projectiles will not be used without special authority.

Paper shot or blank ammunition to be used in special cases.

140. In the case of guns which are prevented, on account of danger to shipping or other property, from firing ordinary projectiles, paper shot or blank ammunition will be used.

Paper shot to be used for lighter gun in special cases.

141. Guns of lighter natures than those referred to in paragraph 135, on iron traversing or Moncrieff mountings, and all R.M.L. howitzers on beds, which are prevented on account of danger to shipping, &c., from being fired at regimental practice, will be fired three times consecutively every second year with paper shot and full charges. In all cases where such shot are authorized care must be taken that they are only fired from guns having a clear range of 400 yards.*

Charges to be used for blank ammunition.

142. For blank ammunition, full charges will be used for all B.L. guns and for R.M.L. guns 12·5-inch and over, and blank charges in silk-cloth cartridges for all other guns.

57 Chatham 3542

Periods for firing.

143. The three rounds will invariably be fired on the same day from the whole of the guns in each separate work, or in the case of large works from as many complete groups as possible.

Grouping of guns.

Guns having the same source of ammunition supply should, as a rule, be in the same group. The grouping, generally, is determined according to the number, bearing, and relative position of the guns which should admit of their being controlled by one group officer.

Station practice to be carried on annually by half the works in district.

144. Except with the guns mentioned in paragraphs 136 and 138, station practice will be carried on annually from half the works in a district; the whole of the guns, or complete groups of guns, in each of the works chosen being manned simultaneously, and all arrangements made which would be necessary in action, the object being not only instruction, but also to test thoroughly the working condition of the mountings and gear as well as all the fitments and accessories of the forts and batteries, the supply of ammunition, and the means for fighting the guns generally.

57 Portsmouth 2964

Special report to be made of grouping arrangements.

145. Particular attention will be paid to the arrangements necessary in each fort or battery for its proper

* Mark I "Paper Shot," filled with waste shot Nos. 1 to 5, will only be fired where there is a clear range of 1000 yards.

57 Chatham 3542

Digitized by Google

subdivision into groups of guns (*see* paragraph 144); and, in order to ensure that the experience gained at such station practice is not lost, the grouping adopted will be shown in detail, with any remarks and recommendations that may suggest themselves for guidance in future practice.

38407 Equipt. 1590

146. Machine gun practice will be carried out under local arrangements; the practice being carried out by either the Royal Artillery or infantry, in accordance with the scheme of moblization. For the annual proportions of ammunition *see* paragraph 176, Part 1.

Mode of using targets.

147. Targets, either moving or anchored, will be used for shotted practice. On all occasions a special idea for the practice should be prepared, and the targets should be placed in the positions ships would occupy, or follow the course the ships would take under the conditions laid down for attack.

38407 Equipt. 1605

Result of practice to be reported.

148. Reports on the result of station practice will be prepared annually, in duplicate, one copy being retained at the station, the other forwarded through the general officer commanding, to the War Office directly after the conclusion of a series of the practice.

38407 Equipt. 1530 104 Artillery 501

Mountings to be examined after practice.

149. At the conclusion of practice, an examination of the mountings will be made by the inspector of ordnance machinery or qualified armament artificer, and the result embodied in a special report which should accompany the practice report.

Regimental Practice.

Allowance of ammunition.

150. The sum allowed annually for ammunition for regimental practice is based on the following:—

(*a*) For each station where only one company is quartered—

57 Gen. No. 3464

4 rounds for each distinct nature of R.M.L. gun, 7-inch to 12·5-inch, and B.L. gun, 6-inch and over, mounted in the command, with a minimum total of 16 rounds where only a small diversity of natures is available.*

12 rounds for each nature of "lighter ordnance" mounted in the command (*see* paragraph 151), except those that have been used for company practice, with a minimum total of 16 rounds.

(*b*) For each lieutenant-colonel's command where two or more companies are stationed together—

6 rounds for each distinct nature of R.M.L. gun, 7-inch to 12·5-inch, and B.L. gun, 6-inch and over, mounted in the command, with a minimum total of 24 rounds where only a small diversity of natures is available.*

* For B.L. guns on disappearing carriages, the ammunition allowance for station practice will be utilised as far as possible.

Digitized by Google

12 rounds for each nature of "lighter ordnance," mounted in the command (*see* paragraph 151), except those that have been used for company practice, with a minimum of 24 rounds.

Practice from S.B. ordnance.

151. 32-pr. S.B. B.L. guns are to be considered as forming one class of lighter ordnance. No practice will be carried out from any other nature of S.B. guns and howitzers.

Allowance for local artillery,

152. The Royal Malta Artillery and local companies of Royal Artillery at Hong Kong will be allowed the same proportion of ammunition as for a lieutenant-colonel's command of two or more companies. At Ceylon, Mauritius, Jamaica, and St. Lucia the company of Royal Artillery and the local company (or companies) of Royal Artillery at each station will be combined, and be entitled to the same allowance as for a lieutenant-colonel's command of two or more companies.

064
15
54
Malta Artillery
172

54

For W.I. regiment.

153. For the West India Regiment 10 rounds 7-pr. R.M.L. per company will be allowed for gunners.

W. I. Reg.
856

Allowance where there are no armament works.

154. Companies stationed at Shoeburyness or at other places where there are no armament works will be allowed ammunition as follows :—

12 rounds, 80-pr. or 64-pr. R.M.L. guns (except when used for company practice),
12 rounds, R.M.L. howitzer,
12 rounds R.B.L. gun (except when used for company practice),
12 rounds, B.L. gun under 6-inch,
12 „ 2·5-inch R.M.L. gun,

57
Gen. No.
3464

and when two or more companies practice together—

6 rounds from each of four natures of heavy guns, R.M.L. or B.L.,

and when only one company can carry out practice at a time—

4 rounds from each of four natures of heavy guns, R.M.L. or B.L.

Guns which are to be used for regimental practice.

155. Regimental practice will be carried out from the guns actually mounted as the armament of the district under strictly service conditions, and in combination with the station practice, so that, if possible, one or more complete groups of works may be in action at the same time according to a tactical scheme framed to suit local circumstances, and any phase of an action it may be desired to illustrate. At least one complete group of works should be manned so as to afford a thorough test of the working of the means of communication, transmission of orders, and supply of ammunition in existence and thus bring to notice any defects that may require attention.

Digitized by Google

Projectiles to be used.

156. Iron projectiles only will be used for this practice, excepting in the case of B.L. guns which may fire steel shells, providing no cast-iron are available at the station.

In cases where Shrapnel shells are allowed as part of the equipment of guns, half the number of common shells for practice will be loaded with blowing charges and fired to represent Shrapnel, and the other half will be fired plugged, except in special cases where a safe land range or other facilities for testing the action of fuzes may be available, when they may be filled and fired as for service.

Use of Shrapnel shells and case shot.

157. Shrapnel shells may be drawn in lieu of common shells for one nature of gun in each year, and varied in successive years. Case shot may be drawn in lieu of shells for practice with guns used for flank defence of ditches.

57
Gen. No.
3464

Projectiles for quick-firing guns.

158. For Q.F. guns, the annual allowance of ammunition for guns actually in possession will be—

57
Gen. No.
4696

For 4·7-inch, 18 rounds per gun.
For 12-pr., 20 rounds per gun.
For 6-pr., 33 rounds per gun (3 boxes).

57
Gen. No.
5918

For 3-pr., 32 rounds per gun (2 boxes).

For 4·7-inch the whole of these rounds will be with common iron shells until the existing equipment of these shells is used up, after which steel shells only will be used. For the 6-pr. and 3-pr., half the rounds will be with steel and half with iron shells. 12-pr. guns and upwards, which cannot be fired with safety with service projectiles, will be treated in the same manner as the guns referred to in paragraph 141.

This Q.F. ammunition must not be commuted for any other nature of ammunition.

104
Artillery
501

Result of practice to be reported.

159. Reports on the result of regimental practice will be prepared annually, in duplicate, on completion of the whole of the regimental practice in a section, one copy being retained at the station, the other forwarded through the general officer commanding to the War Office; and any defects that may be observed in the guns or their equipments will be brought to notice.

Mountings to be examined after practice.

160. At the conclusion of practice a special examination of the mountings will be made by the inspector of ordnance machinery or armament artificer, and a special report furnished, which should accompany the practice report.

Siege Practice.

Allowance of ammunition.

161. Siege practice will be carried out under special directions, which will be issued annually by the War Office. Ammunition to the value of 180*l.* per company will be allowed, and the distribution

Digitized by Google

to the different natures of ordnance will be arranged according to the scheme of practice for the season.

Special report of result of practice.

162. A special report will be made on conclusion of the practice and it will be embodied in the annual report of the School of Gunnery on Garrison Artillery practice.

Company Practice.

Allowance of ammunition.

163. Each company of Royal Artillery is allowed ammunition for company practice on the scale of 140 rounds of 80-pr. or 64-pr. R.M.L. ammunition, in the proportion of 80 per cent. common and 20 per cent. Shrapnel, or the equivalent in money value in that of other natures as may be decided by the officer commanding Royal Artillery in the district.

38407
Equip.
1572

Competition practice for camps of instruction.

164. The companies detailed for the camps of instruction at the Isle of Wight and Devonport will only be allowed ammunition for competitive practice at the rate of 40 rounds of 64-pr. or 80-pr. ammunition a company.

Allowance for schools of instruction.

165. Ammunition will be allowed annually to the camps formed at the schools of instruction, Isle of Wight and Devonport, for carrying out practice, &c., at these places. The value of the ammunition for the camp at Isle of Wight will be 1,700*l.* and at Devonport, 1,400*l.*

7614
3549
57
Gen. No.
6135

Special report of result of practice.

A special report will be made on the conclusion of the practice at each place, and it will be embodied in the annual report of the school of gunnery on artillery practice.

Allowance to infantry, Malta and Gibraltar.

166. At Malta and Gibraltar where infantry would be employed to assist the Royal Artillery in manning the guns of the fortress in case of necessity, a proportion of ammunition, not exceeding 100 rounds of 64-pr. R.M.L. per station is authorised to be expended annually at practice in the dismissal of detachments at gun drill. The distribution of the ammunition among the detachments of the several regiments at the stations that have undergone instruction in gun drill will be decided by the general officer commanding.

57
Malta
7912
57
Gen. No.
3464

167. At St. Lucia 10 rounds for each 9-pr.. R.M.L. gun in the movable armament (5 common and 5 Shrapnel), are allowed annually for the training and practice of infantry, who would be called upon to man these guns in time of emergency.

57
St. Lucia
458

Special for St. Helena.

Allowance for local companies.

168. The detachment of Royal Artillery at St. Helena is to be considered as a company, and companies of Royal Malta Artillery and local companies of Royal Artillery will be considered equivalent to companies of the Royal Artillery for purposes of company practice.

54
Malta Artillery
172

Ammunition for district establishment.

169. The district establishment will be allowed 20 rounds of 64-pr. or 80-pr. ammunition for each squad of 15 non-commissioned officers and men available.

Digitized by Google

54 Artillery 3188

170. A total of 600 rounds of 64-pr. R.M.L. ammunition, or its equivalent money value, is allowed annually for the elementary instruction of young soldiers, which will be allotted to the various stations at home under instructions from the War Office. Ammunition for elementary instruction.

171. Ammunition for company practice will not be allowed to companies that carry on siege practice.

172. The common shells will be fired plugged, except in certain cases where a safe land range may be available, when a proportion of them may be filled and fired as for service. Where live shells cannot be fired with safety, common shells, with blowing charges to represent Shrapnel, will be used instead. Common shells to be fired plugged.

104 Artillery 501

173. Reports on the result of company practice will be rendered annually to the War Office as each company completes its practice. Result of practice to be reported.

Position-finding Practice.

57 Malta. 9775

174. For each station, ammunition will be allowed annually to the value of 5*l.* per position-finding instrument installed, for the training of non-commissioned officers and men in the use of the instrument. For schools of instruction, ammunition to the value of 40*l.* will be allowed for each course of 15 officers, non-commissioned officers, and men under instruction, and will be fired from the particular guns selected for the practice. Allowance of ammunition.

General Instructions.

75 12 3541

175. No B.L. gun should fire more than the following number of rounds in one year:—

6″ to 10″ — 12;
12″ to 13″·5 — 8.

Number of rounds to be limited with B.L. guns.

176. Should circumstances not permit of a B.L. gun loaded with a filled and fused shell being fired at the end of a day's practice, on account of obstruction on the range or other cause, the cartridge will be withdrawn and the shell left in the gun until a favourable opportunity offers of firing the round On no account should an attempt be made to drive the shell out of the gun. Care should be taken that the breech is properly secured before the gun is left, and such precautions taken as may be deemed necessary under local circumstances, until the round can be fired. Loaded B.L. gun that cannot be fired at end of day's practice.

177. General officers commanding districts will forward to the War Office, not later than the 31st October in each year, a statement showing the ammunition in detail that will be required for station, half-yearly, regimental, and company practice, for the following year. Statement to be furnished of ammunition for ensuing year.

178. When it is necessary for the purpose of practice or exercise to remove the bulkheads separating the emplacements of heavy guns, the service will be carried out by the Royal Artillery, the Royal Engineers furnishing Removal of bulkheads.

Digitized by Google

such information as may be requisite to expedite the removal. The bulkheads will also be replaced by the Royal Artillery.

Responsibility for removal.

179. The responsibility for any damage done during the removal and replacing of the bulkheads, due to want of care, will fall on the Royal Artillery.

57 Gen. No. 3464

Laying of platforms.

180. Should it be necessary to lay down double-decked platforms, for practice with guns and howitzers on siege carriages, they will be drawn and laid by the Royal Artillery, as directed in the footnotes against the platforms in the several details of equipment concerned.

Devonport 5 2024

Shells: how to be filled, &c.

181. Plugged common shells required for immediate practice will be filled with water, and the metal plugs screwed into the fuze holes. R.B.L. shells of field service gauge will also have the papier-maché wads placed in the sockets.

52 Devonport 5523

To be emptied before being placed in store.

182. Shells filled with water which have not been expended in practice, or which have been recovered after practice, will be emptied and dried before being placed in store.

Shells filled with coal dust or sand.

183. All shells fired with blowing charges will be filled with dry coal dust or sand, space only being left for the insertion of the fuze and of the bag containing the blowing charge.

184. Q.F. ammunition is to be fired strictly as service ammunition, and no attempt to extract the fuze is, on any account, to be permitted.

57 Gen. No. 4773

Demands for ammunition.

185. Demands for ammunition to replace that expended from the armament equipment will be made on Army Form G 805.

Cartridges and shells which are to be filled by Royal Artillery.

186. For all practice the ammunition of oldest manufacture and that contained in packages which have been opened for inspection will always be first expended, and will be replaced by the next supply from store. Where guns are to be used for which there are no equipment cartridges on charge, powder and empty cartridge bags will be demanded, and the cartridges will be made up by the Royal Artillery in laboratories or other suitable buildings near the work from which practice will be carried out. Shells required to be fired plugged should be taken from any empty shells that may be on charge. Shells set apart for practice only, also shells which may not be fired with full charges, where there are any on charge, should be utilised for this purpose as far as possible. In the case of filled shells, which may not be fired with full charge, and Shrapnel with damp bursting charge, it will not be necessary to remove the bursting charge, it should be drowned by filling the shell with water. Shrapnel shells, from which the primer cannot be extracted, and which, consequently, have been ordered to be fired at practice, will be fired over sea ranges only. When filled shells are to be used, they will be prepared by the Royal Artillery.

57 Devonport 5110

57 Devonport 4794

Digitized by Google

57 Gibraltar 5511

187. In exceptional cases, where there are cartridges belonging to several lots of powder, and a very small number of cartridges in each lot, these cartridges may be blended for gun practice, irrespective of date of issue. For this purpose the old cartridge bags should be used if possible, but braid and new cartridge bags may be demanded if required.

Spare tubes and primers.

188. No spare fuzes will be authorised for practice, but spare friction tubes and vent piece primers will be allowed in the proportion of 10 per cent.

75 7 5316

Cleaning vents of B.L. and axial vented R.M.L. guns.

189. Before commencing practice with B.L. and axial-vented R.M.L. guns, a vent-bit should be passed down the vent to ensure its being clear, and then one vent-sealing electric tube fired to dry the vent, with a view of obviating the possibility of a miss-fire. In the case of guns on disappearing carriages and loaded under cover, a filled sandbag will be suspended in front of the muzzle to stop the sulphur ball of the tube, and prevent its doing damage to the emplacement.

54 Arty. 3268

Bags for bursters and cartridge covers.

190. Calico and paper bags for bursters of shells, paper covers for cartridges, and tin cups, need not be returned to store at the conclusion of gun practice, but should be shown as expended.

Lacquering of bores.

191. Care will be taken that the annual and biennial lacquering of bores, prescribed in paragraph 282, is carried out immediately after the conclusion of the annual and biennial practice.

Making up Ammunition.

Making up of cartridges.

57 Nova Scotia 3699

192. Cartridges for the equipment of all ordnance, will be made up and packed at Woolwich in the Royal Laboratory, or at other stations where dry air rooms are provided, by competent laboratory men under an officer of the staff for the inspection of warlike stores, and with the assistance of a working party of the Royal Artillery when necessary.

Transfer of ammunition.

193. The Royal Artillery will, when practicable, transfer the ammunition to forts and batteries in the neighbourhood of the laboratory where it may have been made up and packed. If this course be not practicable, it will be forwarded by the Army Ordnance Department.

Shells: by whom filled.

194. At home stations shells will, as a rule, be filled by the Royal Artillery. At stations abroad where facilities for the purpose exist, all shells for Royal Artillery services will be filled by the Army Ordnance Department. The filling of Palliser shot (late "shell") with sand will also be performed by the Royal Artillery; but at works where

Digitized by Google

sand cannot easily be procured, the operation will be carried out at the Army Ordnance Department, previous to issue, by men of the Royal Artillery without working pay. The officer commanding the Royal Artillery will arrange with the chief ordnance officer for this work to be performed whenever necessary. These shot will be marked with the letter W, as directed in the Regulations for Magazines, &c.

Paper Shot.

195. The filling of "shot, paper" will be performed by the Royal Artillery, the waste shot and sawdust with which they are to be weighted up to proper weight being demanded from the Army Ordnance Department as required; the operation can be carried out in any available covered building in the work from which they are to be fired.

57
3
6142

The following instructions will be observed in mixing the waste shot and sawdust, and filling the case:—

1. Take the required weight of waste shot (Nos. 1 to 5), or such proportion as is convenient, measure it by capacity and place it in a receptacle for mixing with the sawdust.

57
Chatham
3542

2. Measure by capacity a quarter as much sawdust as waste shot and add it to the latter.

3. Thoroughly mix the shot and sawdust.

4. Insert sufficient of the mixture to bring the paper shot up to its required weight. Should this not completely fill it, the vacant space should be filled with sawdust only.. The case should be lightly tapped during the insertion of the mixture. When full insert the cork bung in the filling hole.

Blank Ammunition.

Blank ammunition for movable armament.

196. Blank ammunition is allowed for all guns and howitzers of the movable armament for expenditure at reviews and field days (*vide* para. 180, Part I.).

57
Dover
2525

Authorised salutes to be at public expense.

197. The ammunition for all salutes and signal guns authorised by the Queen's Regulations will be supplied at the public charge.

10.—TOOLS.

Tools for artificers of artillery companies.

198. Tools when necessary are issued to the Royal Artillery for the use of artificers of Royal Artillery companies; but when these artificers are employed under the orders of the chief ordnance officer, for carrying out repairs in conjunction with civilian and departmental artificers, they will be supplied with tools from the Army Ordnance Department.

Digitized by Google

199. Tools for scraping and painting S.B. and rifled ordnance will be found at pages 140 to 147. For scraping painting and ordnance.

200. Field forges, workshops, and sets of tools, are provided at certain works in every district at home and station abroad to enable repairs to all garrison ordnance, carriages, and slides in the district in Royal Artillery charge to be carried out in the work by armament artificers. Field forges, workshops, and tools for repairing armaments.

201. The following list shows the approved distribution of these forges, workshops, and tools, which are to be maintained in Royal Artillery charge. Lists of the tools will be found in Appendices VIII. and IX. (pages 238 to 274). The tools will be in the charge of the accountant of the Armament District in which they are kept, and will be maintained in serviceable condition, and be available for use by armament artificers when required for carrying out repairs, &c. Distribution.

38407
Equipt.
1530

57
Chatham
3768

Districts and Works.	Field Forge.	Workshop with permanent Forge.	Tools for repair of Ordnance. Re-venting R.M.L.	Re-coppering B.L. & S.B.B.L.	Special and Facing R.B.L.††	Renewing raising valve-seating of B.L. disappearing carriages.†	Tools for repair of garrison carriages and slides (3 D).*	Tools for repair of wood garrison carriages and slides (4 C).	Tools for repair of Position-finding Instruments. Chest. No. 3 H.	Remarks.
North Western.										
57 York 2428 Seaforth	1	—	1	—	—	—	1	1	—	
North Eastern.§										
Tynemouth	1	1A	1	—	—	—	1	1	—	Also to serve Heugh lighthouse and South Gare Batteries.
57 York 2417 Paull's Point Battery...	1	Tools supplied from Tynemouth as required.								
Cemetery Battery ...	1									
District...	—	—	—	—	—	1	—	—	—	
Scottish.										
York 5 5729 Kinghornness	1	—	1	—	—	—	1	—	—	
57 Edin. 2441 Inchkeith	—	1B	1	—	—	—	1	—	—	
Leith Fort	—	1B	—	—	—	—	—	—	—	
District	—	—	—	—	—	1	—	—	—	
Eastern.										
Landguard Fort ...	—	1A	1	—	—	—	1	1	—	
Shotley Battery ...	1	—					1			
District	—	—	—	—	—	1	—	—	—	
57 Dover 2656 *South Eastern.*										
Pier Turret	—	1B	—	—	—	—	1	—	—	
Archcliffe Fort	1	—	1	—	—	—	1	1	—	
Castle (Spur Battery)...	—	1B		—	1	—	1	1	—	Dependent upon ordnance workshops.
Western Heights ...	—	—	—	—	—	—	—	—	—	
Newhaven Fort ...	1	—	1	—	—	—	1	1	—	

57¼
Gen. No.
3126
57
York
2417

* The G.S. smith's chest (11 A) is supplied to every work, in addition; but without the chest, stocks and dies, Whitworth thread, 1⅛ in. to ¼ in.

A. Workshop (smith's shop with fitter's shop superadded). B. Smith's shop.

† For detail of tools, *see* Appendix IX, page 251.

§ A 36 lb. standing vice allowed to each of the following batteries:—Cemetery, Heugh, Paull's Point, and South Gare.

†† Special and facing are distinct sets of tools, but a set of each is allowed in each case where such tools are approved.

Digitized by Google

Districts and Works.	Field Forge.	Workshop with permanent Forge.	Tools for repair of Ordnance. Re-venting R.M.L.	Re-coppering B.L. & S.B.B.L.	Special and Facing R.B.L. ††	Renewing raising valve-seating of B.L. disappearing carriages.†	Tools for repair of garrison carriages and slides (3 D).*	Tools for repair of wood garrison carriages and slides (4 C).	Tools for repair of Position-finding Instruments. Chest, No. 3 H.	Remarks.
THAMES.										
Gravesend, S.D.										
Tilbury Fort	—	1B	1	—	—	—	1	1	—	
New Tavern Fort ...	—	—	—	—	—	—	—	—	—	Dependent upon Tilbury Fort.
Coalhouse Fort... ...	—	1A	1	—	—	—	1	—	—	Dependent upon Tilbury Fort.
Cliffe Fort	—	1B	1	—	—	—	1	—	—	
Shornmead	—	1A								
Sheerness, S.D.										
Sheerness Lines ...	—	1A	—	—	—	—	1	—	—	
Garrison Point Fort ...	1	—	1	—	—	—	1	—	—	
Grain Fort	—	1A	1	—	—	—	1	1	—	
Slough Fort	—	1A	—	—	—	—	1	—	—	§Temporary, pending construction workshop.
Barton's Point	§1	—	—	—	—	—	1	—	—	§Temporary, pending construction workshop.
Hoo Fort	—	—	—	—	—	—	—	—	—	Dependent upon Darnet Fort.
Darnet Fort	1	—	1	—	—	—	1	—	—	Dependent upon Darnet Fort.
District	—	—	—	—	—	1	—	—	—	Dependent upon Darnet Fort.
SOUTHERN.										
Portsmouth and Gosport.										
Fort Fareham	—	1A								
,, Brockhurst ...	—	1B								
,, Grange	—	1B	1	1	1	—	1	1	—	
,, Monckton... ..	—	1B								
,, Widley	—	1B								
Hilsea Barracks ...	—	1B	1	—	1	—	1	1	—	
Point Battery !... ...	—	1B								
Southsea Castle ...	1	—	1	—	1	—	1	1	—	
Horse Sand Fort ...	—	1A	1	—	—	—	1	—	—	
No Man's Land Fort ...	—	1A	1	—	—	—	1	—	—	
Spitbank Fort	—	—	—	—	—	—	—	—	—	
St. Helen's Fort ...	—	—	—	—	—	—	—	—	—	Dependent upon Horse Sand, No Man'sLand and Gun Wharf.
Isle of Wight.										
Puckpool	—	1B								
Sandown	—	1B	1	—	—	—	1	1	—	
Yaverland	—	1A								
Steyne Wood Battery	—	1B	1	—	—	—	1	—	—	
Hatherwood	1	—								
Cliff End	—	1A	1	—	—	—	1	—	—	
Warden Point Battery	1	—	—	—	—	—	—	—	—	
Hurst Castle	—	1A	1	—	—	—	1	—	—	
Portland.										
Verne Citadel	—	1B	1	—	1	—	1	1	—	
East Weir Batteries ...	—	1A								
Nothe Fort	1	—	—	—	—	—	1	—	—	
District generally ...	—	—	—	—	—	1	—	—	1	

57 Chatham 3768

57 Sheerness 2038 2121 2033A

57 I. of W. 1018

57 Weymouth 913

*, A and B, †, ††, *see* foot notes on page 35.

Digitized by Google

	Districts and Works.	Field Forge.	Workshop with permanent Forge.	Tools for repair of Ordnance. Re-venting B.M.L.	Re-coppering B.L. & S.B.F.L.	Special and Facing R.B.L.††	Renewing raising valve-seating of B.L. disappearing carriages.†	Tools for repair of garrison carriages and slides (3 D).*	Tools for repair of wood garrison carriages and slides (4 C).	Tools for repair of Position-finding Instruments. Chest. No. 3 H.	Remarks.
57 Chatham 3768	*Western.*										
I. of W. 1087	Bovisand	—	1A	1	—	—	—	1	1	—	Dependent upon Bovisand.
	Breakwater Fort§ ...	—	—	—	—	—	—	—	—	—	
	Fort Agaton	1	—	1	1	1	—	1	1	—	Agaton & Ernesettle.
	Crown Hill Fort ...	1	—					1	1	—	Forts from Knowles to Egg Buckland.
	Efford	1	—					1	1	—	Forts from Forder to Laira Emplacement.
	Tregantle	1	—	1	—	1	—	1	1	—	Tregantle, Scraesdon, and movable armament.
	Picklecombe Fort ...	—	—	—	—	—	—	—	—	—	Dependent upon Gun Wharf.
	Drakes Island	—	—	—	—	—	—	—	—	—	
	Maker Heights... ...	—	1B	1	—	—	—	1	1	—	
	Steep Holme	—	1B	1	—	—	—	1	—	—	
	Flat Holme	—	1B								
	South Hook	—	1A	1	—	—	—	1	—	—	
	Popton	1	—					1			
57 Pembroke 2687	Stack Rock	—	—	—	—	—	—	—	—	—	Dependent upon South Hook.
	Hubberstone	—	—	—	—	—	—	—	—	—	
	Breandown Battery ...	1	—	1	—	—	—	1	—	—	
	St. Catherine's Fort ...	1	—	—	—	—	—	—	—	—	
57 Bodmin 362	Pendennis Castle ...	1	—	—	—	—	—	1	1	—	
	District	—	—	—	—	—	1	—	—	—	
	Jersey.										
	Fort Regent	—	1B	1	—	—	—	1	1	—	
	Alderney.										
	Fort Albert	—	1B	1	—	—	—	1	1	—	Dependent upon Ordnance Workshop.
	Guernsey	—	—	—	—	—	—	—	—	—	
	Cork.										
	Carlisle Fort	1	—	1	1	1	—	1	1	—	
	Westmoreland Fort ...	1	—	1		1	—	1	1	—	
	Camden Fort	1	—	1		1	—	1	1	—	
38407 Equip. 1463 5 Malta 3213	*Gibraltar*	6	—	2	—	—	—	2	2	—	
	Malta.										
	Delimara	—	1A	—	—	—	—	—	—	—	
	Ricasoli	—	1A	—	—	—	—	—	—	—	
	District generally ...	6	—	2	1	2	1	8	2	—	
	Nova Scotia.										
	York Redoubt	1	—								
	Ives Point	—	1B								
	Fort Charlotte	—	1B	2	—	—	—	2	2	—	
	Fort Clarence	1	—								
	Citadel	1	—								

*, A and B, †, ††, *see* foot notes on page 35.

§ A bench with drawer, and an 80 lb. vice, have been allowed.

Digitized by Google

Districts and Works.	Field Forge.	Workshop with permanent Forge.	Tools for repair of Ordnance. Re-venting R.M.L.	Re-coppering B.L. & S.B.L.	Special and Facing R.B.L. ††	Renewing raising valve-seating of B.L. disappearing carriages.†	Tools for repair of garrison carriages and slides (3 D).*	Tools for repair of wood garrison carriages and slides (4 C).	Tools for repair of Position-finding Instruments. Chest, No. 3 H.	Remarks.	57 Chatham 3768
Bermuda.											
Fort George ...	1	—									
,, Hamilton ...											
,, Prospect ...	1	—									
,, Langton ...											
Ireland Island ...	1	—	3	—	—	—	3	3	—	†Dependent upon Ireland Island.	
Scaur Hill† ...	—	—									
Whale Bay Battery	1	—									
Fort Victoria ...	—	1B									
,, Albert ...											
Alexandra Battery	—	1B									
Jamaica.											
Port Royal ...	—	1A	1	—	—	—	1	1	—		
Fort Clarence ...	1	—	—	—	—	—	1	1	—		
Station	—	—	—	—	—	1	—	—	—		57
St. Lucia.											St. Lucia
Cocoa Nut Estate	—	1A	1‡	—	—	—	1	—	—	‡ For Morne Fortune & South of Harbour.	251
Vigie	1	—	—	—	—	—	1	—	—		57
Morne Fortune...	1	—	—	—	—	—	1	—	—		Barbados
Station	—	—	—	—	—	1	—	—	—		2571
Barbados ...	—	—	—	—	—	—	—	—	—	Dependent upon ordnance workshop for tools, &c.	57
Mauritius.											Mauritius
Fort George ...	—	1B	1	—	—	—	1	1	—		2964
General use ...	1	—	—	—	—	—	—	—	—		
Station	—	—	—	—	—	1	—	—	—		
CAPE.											
Table Bay.											57
Fort Wynyard ...	—	1A	1	—	—	—	2	1	—		Cape
Craigs Battery	—	1B									5246
Simons Bay ...	—	1A†	1	—	—	—	1	1	—	†In most convenient position.	
Station	—	—	—	—	—	1	—	—	—		57
Hong Kong.											H. Kong
Belchers Battery	—	1A				—	1				9199
Stonecutters, West	—	1B				—	1				57
Kowloon Dock ...	—	1B	1	1	—	—	1	1	—		H. K.
Kowloon West ...	1	—				—	—				9324
Lyemun... ...	—	1B				—	1				57
North Point ...	1	—	—	—		—	—	—			H. Kong
General use ...	—	—	—	—	—	—	—	1	—		8997
Station	—	—	—	—	—	1	—	—	—		
Singapore.										(a) A field forge issued to each of these works as a temporary measure pending erection of the workshops.	38407
Fort Connaught (a)	—	1B									Equip.
Serapong ...											1463
Siloso	—	1B	1	1	—	—	1	1	—		
Passir Panjang (a)	—	1B									
Tanjong Katong	1	—									
Ceylon											57
Trincomalee ...	1	—	—	—	—	—	—	—	—		St. Helena
Station	—	—	—	—	—	1	—	—	—		1745
St. Helena ...	—	1A	1	—	1	—	1	1	—		

*, ▲ and ■, †, ††, *see* foot notes on page 35.

Digitized by Google

202. Although these tools will be accounted for as part of the equipment of the several works to which they are appropriated, they will be considered available at all times for use at any other works in the district where repairs, &c., are to be performed by armament artificers. Tools to be available for repairs by armament artificers.

203. Special tools, instruments, &c., are also allowed to the instructors in position-finding to carry out minor repairs and adjustments to the position-finding instruments (*see* Appendix X., pages 275 and 276). Special tools for position-finding instruments.

11.—TARGETS FOR GUN PRACTICE AND INSTRUCTION.

204. Companies of Royal Artillery will practise over sea ranges at targets of the authorised pattern for this service. Where only one company practises at a station, 4 floating targets will be allowed annually; where two companies practise at the same place, three targets will be allowed for each company; where more than two companies practice at the same place, 2 targets per company will be allowed. Practise over sea ranges. Proportion.

38407
Equipt.
1530

205. At localities where practice is carried on by more than one company, it is expected that the proportions herein laid down may be considerably reduced, provided that due attention is paid to repairs. Proportion reduced.

206. At stations abroad the targets will be made locally, except under very special circumstances. Targets abroad to be made locally.

207. The officer commanding the Royal Artillery will furnish annually to the officer in charge of supplies an approximate estimate of the amount that will be required for the hire of boats for laying and for bringing back the targets, and all boats required for this purpose will be hired by that department. Estimate for boats by officer commanding R.A.

208. Targets for instructional purposes will be allowed to garrison artillery, for instruction in laying guns, at the stations named below, and in the following proportions:— Targets for instructional purposes.

Belfast	1	Bermuda	2
Thames	3	Cape	2
Cork	4	Ceylon	2
Eastern	2	China	2
Guernsey	2	Straits Settlements	2
Jersey	1	Egypt	2
Scottish	1	Gibraltar	6
North-Eastern	1	Halifax, N.S.	3
North-Western	1	Malta	8
Shoeburyness	1	Mauritius	1
South-Eastern	3	St. Helena	1
Southern	7	Jamaica	2
Western	5	St. Lucia	1

Digitized by Google

Materials for instructional targets.

209. The materials required for instructional targets are as follows :—

Chain, $\frac{1}{16}$-in. × 3 ft. 6 in.			1
Hooks, S, iron, 1½-in.			1
Iron, rod, round, $\frac{5}{16}$-in. diameter × 52 in. long... ...			1
Lead, sheet, ½ in. thick, equilateral triangle with 6-in. sides			1
Nails, iron, rose-head, stamped, No. 147 ...		oz.	5
Paint	light green	oz.	12
	,, red	,,	12
	white	,,	1
Rings, iron, ¼-in. × 1½-in. diameter			1
Screws, iron, flathead, ⅝-in., gauge No. 9			4
Timber, deal battens, 4 ft. × 4½ in. × ½ in.			4
Timber, deal boards, 4 ft. × 9 in. × ½ in.			5
Timber, deal boards, 4 ft. × 3 in. × ½ in.			1

Station practice of garrison artillery.

210. The station practice of Garrison Artillery at the following places will, as far as practicable, be carried out at moving targets, arrangements being made by the officer commanding Royal Artillery to secure the services of government steamers or launches for towing at the stations where these are available. The targets to be employed are, large Record targets of special pattern known as the Richardson, and the Rider patterns, and a smaller target of no general pattern. The Richardson pattern is to be preferred where ample facilities exist for docking and storing at a wharf, but the Rider is more suitable where the target may have to be beached. The smaller target will only be used where the large one cannot, from local circumstances be employed, or as a drifting target in combination with the large one, and the annual cost of this, where it may be found necessary, is not to exceed £6 per station.

7614
3497

Stations.	No. of Record target.	Stations.	No. of Record target.	
Cork	 2	Gibraltar	 2	
South Eastern	 1	Halifax, N.S.	 1	
Thames	 2	Hong Kong	.... 2‡	
Southern	 3	Jamaica	 1	
Western	.... 4*‖	Malta	 3	
Eastern	 1	Mauritius	 1	7615
Scottish	 1	Singapore	 1	6
Bermuda	 1	Sierra Leone	 1	54
Cape of Good Hope	 1	St. Lucia	 1	Edinburgh 2763
Ceylon	... 2†	Shoeburyness	 2	57 | 29 | 3688

57 | D'port 5990
57 | Ceylon. 1242
7614 | 3497

* One Hong Kong pattern for Falmouth.

† Pending construction of these targets and provision of increased towing power, any targets available at the station may be used for practice.

‡ At Hong Kong, the Hong Kong pattern will continue to be used.

Digitized by Google

Targets to be provided locally.

211. The targets will be provided locally through the Army Ordnance Department. The large one in accordance with the approved pattern, a drawing of which is furnished to each station, the small one which after consultation with the officer commanding Royal Artillery, to a design which may be considered most suitable to the locality.

Rope for towing.

212. Galvanised steel rope, (400 yards, $\frac{3}{8}$-inch) for towing, will be provided by the Army Ordnance Department. Where this rope is found unsuitable, hemp or coir rope ($2\frac{1}{2}$-inch) may be used instead.

Working pay for manufacture, repair, and accounting for targets.

213. In garrison artillery, working pay will be allowed both for the manufacture of, and current repairs to, targets, subject to the instructions contained in Part 1, paras. 321 and 322. Targets for garrison artillery will be accounted for in the account of miscellaneous stores at the head-quarters of a district.

38407 Equipt. 1530

Targets to be returned.

214. At the conclusion of the annual practice all floating and small towing targets, except such as are condemned as not repairable, will be repaired and returned to store in a serviceable condition, and the Army Ordnance Department will arrange for their careful custody until again required. At certain stations, however, where the targets cannot be conveniently returned to store, they may remain in Royal Artillery charge. The targets condemned as unserviceable and beyond repair will also be returned to store.

215. The large towing targets will also be returned to store in a serviceable condition, if the Royal Artillery have the means of hauling them ashore and repairing them; if not, they will be put in repair by the Army Ordnance Department after their return.

Expenditure of targets, rafts, anchors, and cables.

216. Floating targets and rafts, when shot away at practice, may be written off charge, by a certificate of the commanding officer to that effect on the usual expense voucher, Army Form P 1925, but when anchors and cables are lost, the course laid down in the Queen's Regulations, as regards expense stores, will be followed.

38407 Equipt. 1530 V.

1st Durham Artillery 138

Floating targets not left out at night.

217. Floating targets are not, as a rule, to be left out at night either before, during, or after practice.

12.—TEXT BOOKS, HAND BOOKS, AND RANGE TABLES.

Text and hand books.

218. Text books, hand books, and range tables are issued in the following proportions, and will be held on charge as laid down in paragraphs 106 to 108 of Part I:—

Digitized by Google

Distribution.	Text Books, sets.*	Handbooks.	Range Tables.
R.A. District Offices	1	3 per nature of ordnance in the district	3 per nature of ordnance in the district.
R.A. — Garrison — Lieut.-Colonels commanding districts	1	**2 per nature of ordnance in the district	2 per nature of ordnance in the district.
R.A. — Garrison — Sub-districts not under a Lieut.-Colonel	1†	1 per nature of ordnance in the sub-district	1 per nature of ordnance in the sub-district.
R.A. — Lecture rooms‡	1	1 per nature of ordnance in the district	1 per nature of ordnance in the district.
R.A. — Assistant Gunnery Instructors §	1	1 ditto	1 ditto.
Forts or batteries	—	1 per nature of ordnance appropriated to or mounted in the work	1 per gun.
Movable armament	—	1 per piece	1 per piece.
Officer Commanding Militia and Volunteer Artillery	1	1 per nature of ordnance on charge of Militia and Volunteer Artillery in the sub-district	1 per nature of ordnance on charge of Militia and Volunteer Artillery in the sub-district.
Artillery — Militia†† — headquarters of regiment	—	3 per nature of ordnance in possession	3 per nature of ordnance in possession used for practice.
Artillery — Militia†† — companies ...	—	1 per gun in possession.	1 for every gun used for practice.
Artillery — Volunteers †† — headquarters of corps	—	3 per nature of ordnance in possession.	3 per nature of ordnance in possession used for practice.
Artillery — Volunteers †† — batteries and companies	—	1 per gun in possession.	1 for every 4 guns used for practice.
Chief ordnance officer of a district ¶	1	3 per nature of ordnance in the district	
Armament-majors, R.A. ...	1	1 per nature of ordnance in the district	1 per nature of ordnance in the district.

40185
7104

* The Text Books referred to, comprise the following works:—"Treatise on Ammunition." "Treatise on Military Carriages," "Treatise on Service Ordnance," "Treatise on Service Explosives and Manual of Hydraulics for Garrison Artillery."

† Where a number of sub-districts are near each other, they will usually be grouped under one command. Text books will then be allowed for each group; individual sub-districts will not be supplied unless they are important and at such a distance that they cannot be included in a group.

‡ For use of the assistant gunnery instructor, but not to exceed one set per district, except in special cases.

§ At stations where there are no lecture rooms. At stations where a lecture room for R.A. exists, books will not be issued to the assistant gunnery instructor, those in the lecture room being available.

¶ At Woolwich Arsenal the allowance will be two sets of Text Books, and three Hand books for each nature of ordnance in the service.

** One copy to be used for instructional purposes where necessary.

†† Handbooks are also allowed for the guns that would be manned by Militia and Volunteers on mobilization, in addition to those allowed for guns in possession.

N.B.—Handbooks for Position-Finders and Range-Finders are allowed "per instrument, and in the same proportion as other handbooks for all the above, except Militia and Volunteer Artillery.

Digitized by Google

13.—MARKING OF CARRIAGES, WAGONS, &c. AND ARTILLERY STORES.

For detailed instructions, see Part 1.

57
Devonport
4351

219. The following Table shows the lettering to be carried out for the carriages, wagons, &c., of the Siege Companies and Movable Armaments. Lettering of carriages, wagons, &c.

Application of Marks to Carriages, Carts, Wagons, &c, of Siege Companies and Movable Armaments.

Classes of Carriages, Carts, Wagons, &c.	Nature and Position of Marks.	Examples.
	SIEGE COMPANIES.	
Carriages	Title of unit on off side of trail, the words "Siege Company," and nature of piece, on near side of trail.	* E.R.A. Siege Company. 40-pr. R.M.L. 8-in. R.M.L. howitzer.
Limbers	Title of unit, the words "Siege Company," and nature of piece, on rear of bed.	Same as for carriages.
Ammunition boxes...	Title of unit, the words "Siege Company," and nature of piece, on left rear of each box, close to the top.	Same as for carriages.
Ammunition and store wagons.	Title of unit, the words "Siege Company," and nature of ammunition carried, on tail-board.	* S.R.A. Siege Company. 40-pr. | 25-pr. } R.M.L. (1). 8-in. | 6·6-in. } R.M.L. howr. (2)
Platform wagons ...	Title of unit, the words "Siege Company," and nature of service.	* W.R.A. Siege Company. Gun. Siege Company. Gyn.
Trench cart	Title of unit, and the words "SiegeCompany,"on tail-board	* E.R.A. Siege Company.
Buckets, leather ...	Title of unit, and the words "Siege Company" on outside.	* S.R.A. Siege Company.
Cases, cartridge, leather	Title of unit, the words "Siege Company," and the nature of piece, on outside.	* S.R.A. Siege Company 40-pr. R.B.L. 8-in. howitzer.

A.O. 69, 1893.

* Number of company.

Digitized by Google

Carriages, Carts, and Wagons.	Nature and Position of Marks.	Examples.
	MOVABLE ARMAMENTS.	
Carriages	The words "Movable Armament," and nature of piece, on near side of trail.	Mov. Armt. — 40-pr. R.B.L. 16-pr. R.M.L.
Ammunition and store wagons.	The words "Movable Armament" on front board.	Mov. Armt.
Trench carts	The words "Movable Armament" on front board	Mov. Armt.
Hand carts	The words "Movable Armament" on front board.	Mov. Armt.
Buckets, leather ...	The words "Movable Armament" on outside.	Mov. Armt.
Cases, cartridge, leather	The words "Movable Armament," and nature of piece, on outside.	Mov. Armt. — 40-pr. R.B.L. 16-pr. R.M.L.

A.O. 69, 1893

219A. Artillery symbols for the various gun groups in works of defence, will be painted in the following manner :—

57
Gen. No. 6227

Symbols relating to magazines	....	red
Other symbols	....	white
Lettering in all cases	....	black

The symbols will be stencilled upon the guns, buildings, &c. ; the sizes of the stencil plates used for the purpose, being as follows :—

Inside magazines	....	12-inches.
Outside all doors	....	6 ,,
On guns, carriages, and slides	....	4 ,,
Lintels of ammunition recesses	....	3 ,,

The stencil plates will, where possible, be provided locally.

14.—REPAIR AND PRESERVATION OF EQUIPMENT, INCLUDING ARMAMENT OF WORKS

HARNESS AND SADDLERY.

Staff of R.A. Districts.

220. The repair of saddlery allowed for the staff of Royal Artillery districts will be effected by the artificers of the nearest battery when practicable.

Digitized by Google

ORDNANCE, CARRIAGES, SLIDES, PROJECTILES, GAUGES, &c.

Supply of Stores for Care and Preservation of Ordnance, &c.

Reference to the detailed instructions.

221. Detailed instructions for the preservation, painting, inspection, and fitting of ordnance, carriages, slides, projectiles, &c., are given in paragraphs 270 to 698, for the guidance of officers of Royal Artillery in carrying out the services therein referred to, and of ordnance store officers in supplying such materials and stores as may be from time to time required for performing the same.

Stores for preserving ordnance.

75
12
4803

222. The proportions of stores allowed annually for the care and preservation of ordnance and stores appertaining to the service thereof, also luting and luting oil for plugs and adapters of empty shells, and metal fuzes in filled shells, are laid down in the tables, on pages 46 to 58.

222A. The adapters of filled shells will be coated with red lead, and the following quantities per 100 shell will be allowed :—

9-inch R.M.L 9·2 „ B.L. 10 „ B.L. and R.M.L.	12 lb
Above 10-inch B.L. and R.M.L., 16 lbs.	

This will not be an annual supply ; the red lead is applied when the shells are filled, and the adapters should not be removed until the shells are emptied.

223. The following are the general uses for which the lubricants in the tables are adapted :—

Uses of lubricants.

a. Grease is used as a coating for protecting machinery from rust when not in use. It is also employed for heavy bearings where a thicker consistency than that of oil is desired.

b. Rangoon oil, for oiling metal work when it is necessary to avoid any liability to rancidity, as is the case with some of the fatty oils.

Militia and volunteer-artillery

224. The foregoing instructions will be observed as far as practicable in connection with the ordnance, carriages, slides, and projectiles, in possession of the militia and volunteer artillery at home stations.

Digitized by Google

Stores for Preservation of Gear, Tools, Instruments, &c.

Articles.	Gear for landing heavy Guns at Sea Forts. — Proportions.		Chain Ammunition Lift. — Proportions.	Tools, Ordnance. — Examining, Venting. Facing R.B.L. Re-coppering. — Proportions.	Range-Finders. Depression. — Proportions.
	Chain.	Other parts of gear.			
Blacklead, dry ...	7 lb. per chain	...	...	...	—
Bricks, Bath	...	...	1 per lift	½ brick per set	—
Cloths, sponge ...	...	...	4 per lift	4 per set	—
Cotton waste, white ...	28 lb. per chain	...	2 lbs. per lift	...	—
Grease, anticorrosive .	...	...	...	4 oz. per set	—
,, Field's ...	...	...	6 lbs. per lift	...	—
Leathers, chamois ...	...	...	...	...	1 per instrument
Linen, old	...	...	...	...	1 lb. per instrument
Oil, Rangoon	...	10 gall. per set	10 pints per lift	½ pint per set	—
Oil, for instruments ...	...	...	...	...	1 pint per instrument
Oil, paraffin, light ...	...	5 gall. per set	...	...	1 pint per instrument
Tallow, Russian ...	100 lb. per chain	...	...	...	—

Digitized by Google

Digitized by Google

Articles.	Purpose.	Rifled — B.L. Proportions. Open works.	Rifled — B.L. Proportions. Casemates.	Rifled — R.B.L. Proportions. Open works.	Rifled — R.B.L. Proportions. Casemates.
Bricks, Bath	For general use*	1 to 2 guns ...	...	1 to 2 guns ...	...
Cloths, sponge	For general use* ...	9·2-in. and over, 30 per gun ... 8-in. and under, 26 per gun ...		4 per gun	
Cotton waste, white	For cleaning bright parts...	3 lb. per gun on disappearing carriage		... ...	
	For wiping oil off slides before practice	3 lb. per gun, except guns on disappearing carriages		7-in., 3 lb. per gun, mounted on iron slide	
Dubbing ...	For leather washers	½ lb. per disappearing carriage 1 lb. per pump, air, double ...		... ...	
Glycerine ...	For preserving packings ...	4 lb. per 6 inch disappearing carriage with E.O.C. pattern pump		... ...	
Grease, anti-corrosive	For coating bright parts (4 coats annually) guns ...	13·5-in. to 10-in., 6 oz. per gun 9·2-in. to 6-in., 4 oz. per gun 5-in. and under, 3 oz. per gun		7-in., 4 oz. per gun ... ... 40-pr. and under, 3 oz. per gun	
	For coating bright parts (4 coats annually) mountings	6-in., and over, 1¾ lb. per mounting 5-in. and 4 in., ¾ lb. per mounting		7-in., ¾ lb. per mounting ... 40-pr. and 20-pr., 6 oz. per mounting †12-pr. and under, 4 oz. per mounting	
Grease, Field's‡	For teeth of cog wheels ...	12-in., 5 lb. per gun | 3 lb. per gun 10-in. and under. 4 lb. per gun | 2 lb. per gun		7-in. on Moncrieff carriage ... 5 lb. per gun	
	For lubricating racers ...	1 lb. per gun§	...	...	...
	For turntables	...	...	...	...

* Half of these proportions will be allowed for guns, carriages, and slides, dismounted, in Royal Artillery charge.

† Exclusive of guns used for drill.

Digitized by Google

servation of Armaments.

Ordnance.		S.B.B.L. Ordnance. 32-pr. — Proportions.	Siege Companies and Movable Armaments. — Proportions.			Smooth-bore Ordnance. — Proportions.	Quick-firing Ordnance. — Proportions.	Machine Guns. — Proportions.
R.M.L. — Proportions.			5-in. and 4-in. B.L.	7-pr. to 25-pr. R.B.L. and R M.L. and 2·5-in. R.M.L.	40-pr. R.B.L. and R.M.L. guns and R.M.L. Howitzers.			
Open works.	Casemates.							
1 to 2 guns	...	1 to 4 guns	1 to 4 guns.	1 to 6 guns	1 to 5 pieces	1 to 15 pieces	4·7-in. 1 to 2 guns, 12-pr. 1 to 6 guns, 6-pr. and 3-pr. 2 to 5 guns	...
4 per gun		4 per gun ...	4 per gun..	4 per gun...	4 per piece	1 to 8 pieces	4·7-in. 26 per gun, 12-pr. 10 per gun, 6 and 3-prs. 7 per gun	...
...	...	...	...	...	...	...	4·7 in. and 12 pr. 3 lb. per gun.	...
3 lb. per gun mounted on iron slide, with hydraulic buffers		2 lb. per gun, mounted on iron slide	...	...	...	...	...	...
1 lb. per high angle fire mounting.	...	...	...	...	...	...	...	...
...	...	...	...	...	...	...	...	...
}	... ...	}	3 oz. per gun	3 oz. per gun	4 oz. per piece.	...	4·7-in. 4 oz. per gun 12-pr. 3 oz. per gun 6-pr. 10 oz. per gun 3-pr. 4 oz. per gun	...
7-in. and over, 1¾ lb. per mounting 80-pr. and under, on wrought-iron mountings, ¾ lb. per mounting 12·5-in. and 12-in. 35 tons		3 oz. per gun	...	...	...	...	4·7-in. 12 oz. per gun. 12-pr. 10 oz per gun.	...
5 lb. per gun	3 lb. per gun 12-in. 25 ton to 9-in.							
4 lb. per gun	2 lb. per gun 9 in., 7-in., and 64-pr. on Moncrieff carriage.	...	2 lb. per carriage	1 lb. per carriage	2 lb. per carriage	...	4·7-in. 5 lb. per gun. 12-pr. 4 lb. per gun.	...
4 lb. per gun	...							
1 lb. per gun§	...	...	...	...	..	...	...	...
2 cwt. per gun mounted on turntables		...	...	...	...	...	...	...

‡ Price's composite grease will be used at all stations abroad except Halifax and St. Lucia.
§ Mounted on slides having traversing racks.

Digitized by Google

Rifled

Articles.	Purpose.	B.L. — Proportions.		R.B.L. — Proportions.	
		Open works.	Casemates.	Open works.	Casemates.
Hemp, undressed	For cleaning bores* ...	...	...	3 lb. per gun ...	... ...
Linen, old, or cotton waste	For general use with turntables	...	...	...	...
Linen, old	For general use*	1 lb. per gun	...	1 lb. per gun	...
	For cleaning out cylinders of disappearing carriages	10 lb. per gun on disappearing carriage		...	...
Luting§	For lubricating metal fuzes and fuze-hole plugs	7 oz. per 100 shells		7 oz. per 100 shells ...	...
	For adapters of empty shells	9·2-inch to 12-inch, 2¼ lb. per 100 shells 13·5-inch, 3 lbs. per 100 shells		...	...
	For lubricating gas-check plugs and nuts, Mark II	...	...	...	...
Oil, luting §§	For lubricating metal fuzes and fuze-hole plugs	⅓ gill per 100 shells		⅓ gill per 100 shells ...	...
	For adapters of empty shells	9·2-inch to 12-inch, 2 gills per 100 shells 13·5-inch, 2½ gills per 100 shells		...	...
	For lubricating gas-check plugs and nuts, Mark II	...	...	...	...
Oakum ...	For general use* ...	9·2-in. and over, 3 lb. per gun 8-in. and under, 2 lb. per gun		1½ lb. per 5 guns ...	...
38407 Equipt. 1675 Oil, olive, best quality, lubricating	For lubricating roller paths of turntables	...	...	...	...
	For preservation of obturating pads†	13·5-in. and 12-in., 4 pts. per gun 10-in. to 8-in., 3 pts. per gun 6-in. and under, 2 pts. per gun.		...	...

* Half of these proportions will be allowed for guns, carriages, and slides, dismounted, in Royal Artillery charge.

† To be mixed with the Russian tallow.

Digitized by Google

Ordnance. R.M.L. — Proportions. Open works.	Ordnance. R.M.L. — Proportions. Casemates.	S.B.B.L. Ordnance. 32-pr. — Proportions.	Siege Companies and Movable Armaments. — Proportions. 5-Inch and 4-inch B.L.	7-pr. to 25-pr. R.B.L. and R.M.L. and 2·5-in. R.M.L.	40-pr. R.B.L. and R.M.L. guns and R.M.L. Howitzers.	Smooth-bore Ordnance. — Proportions.	Quick-firing Ordnance. — Proportions.	Machine guns. — Proportions.
...	...	...	...	...	...	...	...	...
28 lb. per gun, mounted on turntable		...	...	...	...	...	...	...
1 lb. per gun	...	2 lb. per 5 guns	1¾ lb. per 5 guns	1 lb. per gun	1 lb. per piece	1 lb. per 8 pieces	4·7 in. and 12-pr. 1 lb. per gun, 6 and 3 pr., ½-lb. per gun	1 lb. per gun
...	...	...	...	...	...	...	...	...
7 oz. per 100 shells	... ...	...	7 oz. per 100 shells	7 oz. per 100 shells	7 oz. per 100 shells	7 oz. per 100 shells	4·7-in. and 12-pr., 7 oz. per 100 shell	...
9-inch to 12·5-inch, 2¼ lb. per 100 shells 16-inch and 17·72-inch, 3 lb. per 100 shells		...	...	...	...	...	...	...
1½ lb. per 100 shells	... ...	...	...	...	1½ lb. per 100 shells	...	...	...
⅓ gill per 100 shells	... ...	...	⅓ gill per 100 shells	⅓ gill per 100 shells	⅓ gill per 100 shells	⅓ gill per 100 shells	4·7-in. and 12-pr., ⅓ gill per 100 shells	...
9-inch to 12·5-inch, 2 gills per 100 shells 16-inch and 17·72-inch, 2½ gills per 100 shells		...	...	...	...	...	...	...
1 gill per 100 shells	... ...	...	...	...	1 gill per 100 shells	...	...	...
1½ lb. per 5 guns	...	...	1¾ lb. per 5 guns	1 lb. per 5 guns	1½ lb. per 5 pieces	1 lb. to 15 pieces	4·7-in., 2 lb. per gun, 12-pr., 1½ lb. per gun 6 and 3-pr., 6 lb. to 5 guns	...
10 gallons per gun mounted on turntable		...	...	...	...	...	...	...
...	...	...	1½ pts. per gun	...	...	...	...	...

§ Mark II luting to be mixed with luting oil.

§§ To be mixed with luting. The mixing should be by weight in the proportion of 100 luting to 17 of luting oil. This oil will be issued in tin bottles containing 1 gallon and 1 quart respectively, as most convenient, according to the quantities demanded.

57
Gen. No.
5442

Digitized by Google

Articles.	Purpose.	Rifled			
		B.L. — Proportions.		R.B.L. — Proportions.	
		Open works.	Casemates.	Open Works.	Casemates.
Oil, Rangoon	For cleaning bright parts, &c.	9·2-in. and over ... ‡8 qts. per gun ... ‡‡6 qts. per gun...		‡2½ pts. per gun ... ‡‡1¼ pts. per gun ...	
		8-in. and under ... ‡5 qts. per gun ... ‡‡4 qts. per gun...			
	For lubricating axles and bearings of the trucks and rollers, and also for the shafts and bearings connected with the elevating and traversing gears (25 per cent. more allowed to Halifax, N.S.)	12-in., 6 qts. per gun ... ... 9-in. and 10-in. 3 qts. per gun | 2 qts. per gun 8-in. and 6-in. 2 qts. per gun | 1½ qts. per gun Guns on disappearing carriage 4 qts. per gun | ... Lighter natures 1 pt. per gun..		Guns on traversing slides or Moncrieff carriages, 1 pt. per gun.	
	For lubricating bearings of turntables	...	...	...	...
	For oiling all parts of guns and mountings	...	...	...	...
	For cleaning off rust ...	1 gall. per gun |	...	1 gall. per Moncrieff carriage	
Oil, paraffin, light†	For cleaning off clogged oil	1 gall. per gun		1 gall. per Moncrieff carriage	
Potash, American	For removing lacquer from bores of guns	13·5-in. and 12-in., 6 lb. per gun 10-in. and 9·2 in., 3 lb. per gun 8-in. and under, 2 lb. per gun		7-in., 2 lb. per gun ... 40-pr. and under, 1½ lb. per gun.	

† "Cans, oil, lubricating, G.S.," allowed in the proportion of 1 per work to hold the paraffin.
‡ Guns in use for drill.

Digitized by Google

Ordnance. — Proportions.		S.B. B.L. Ordnance, 32-pr. — Proportions.	Siege Companies and Movable Armaments. — Proportions.			Smooth-bore Ordnance. — Proportions.	Quick-firing Ordnance. — Proportions.	Machine guns. — Proportions.
R.M.L. — Proportions.			5-inch and 4-inch B.L.	7-pr. to 25-pr. R.B.L. and R.M.L. and 2·5-in. R.M.L.	40-pr. R.B.L. and R.M.L. guns and R.M.L. Howitzers.			
Open works.	Casemates.							
7-in. and over, 2 pts. per gun,	1½ pts. per gun	...	2½ pts. per gun	1 pt. per gun	1 quart per piece.	1 pint to 8 pieces	4·7-in., 5 qts. per gun‡; 4 qts. per gun‡‡; 12-pr., 4 qts. per gun‡; 3 qts. per gun‡‡; 6 and 3 pr. 1 qt. per gun	...
80-pr. and under, including 64-pr. on depression carriage,	1¼ pts. per gun	...						
8-in., 6·6-in., and 6·3-in. howitzers	1½ pts. per howr.	...						
12·5-in. to 12-in. 35 tons, 4 qts. per gun	3 qts. per gun	2 pts. per gun.	...	...	...	Guns on traversing slide, 1 pt. per gun	4·7-in. and 12-pr., 2 qts. per gun	...
12-in. 25 tons to 10-in., 3 qts. per gun	2 qts. per gun							
9-in., 2 qts. per gun	1½ pts. per gun							
7-in., 1 qt. per gun	... ...							
Lighter natures on traversing slides, or Moncrieff carriages, also 64-pr. depression carriage, 1 pt. per gun								
20 gallons per gun mounted on turntable		..	...	...	...	...	...	...
...	...	...	...	...	...	...	...	½ pt. per gun
1 gall. per 9-in. and upwards, also for Moncrieff carriage	...	...	2 pints per carriage	1½ pints per carriage	2 pints per carriage	...	4·7-inch, 1 gall. per gun, 12-pr., 3 qts. per gun 6 and 3-pr., ½ pt. per gun	½-pt. per gun
1 gall. per 9-in. and upwards, also for Moncrieff carriage		...	2 pints per carriage	1½ pints per carriage	2 pints per carriage	...		
2 gallons per gun, mounted on turntables								
12·5 in. and 12-in., 5 lb. per gun		...	1½ lb. per gun	...	...	Carronades, 1 lb. per piece. 68-pr. and 32-pr., 2 lb. per piece. 24-pr. and under, including howitzers 1 lb. per piece.	4·7-in., 2 lb. per gun, 12-pr., 1 lb. per gun 6-pr. and 3 pr., 1 lb. per gun	...
11-in. and 10-in., 4 lb. per gun								
8-in. and 8 in., 2 lb. per gun								
7-in. and under, 1½ lb. per gun								

‡‡ Guns not in use for drill.

Digitized by Google

Articles.	Purpose.	Rifled			
		B.L. — Proportions.		R.B.L. — Proportions.	
		Open Works.	Casements.	Open Works.	Casements.
Soap, soft ...	For general use*	6 lb. per 5 guns	...	3 lb. per 5 guns	...
Soda ...	For washing fired cartridge cases	...	...	...	...
	For pivot plugs and holes of pivot plugs	1½ lb. per pivot plug	...	1 lb. per pivot plug	...
Tallow, Russian	For preservation of obturating pads‡	13·5-in. and 12-in., 4 lb. per gun 10-in. to 8-in., 3 lb. per gun ... 6-in. and under, 2 lb. per gun		...	...
	For lubrication of ball bearings	...	...	...	...
	For preserving hydraulic packing	1 lb. per disappearing carriage		...	...

* Half of these proportions will be allowed for guns, carriages, and slides, dismounted, in Royal Artillery charge.

Digitized by Google

Ordnance. R.M.L. — Proportions. Open works.	Ordnance. R.M.L. — Proportions. Casements.	S.B. L. Ordnance, 32-pr. — Proportions.	Siege Companies and Movable Armaments. — Proportions. 5-inch and 4-inch B.L.	7-pr. to 25-pr. R.B.L. and R.M.L. and 2·5-in. R.M.L.	40-pr. R.B.L. and R.M.L. guns and R.M.L. Howitzers.	Smooth-bore Ordnance. — Proportions.	Quick-firing Ordnance. — Proportions.	Machine guns. — Proportions.
3 lb. per 5 guns	...	2 lb. per 5 guns	1½ lb. per gun	½-lb. per gun	1 lb. per piece	1 lb. per 8 pieces	4·7-in., 6 lb. per 5 guns, 12-pr., 2 lb. per gun 6-pr. and 3-pr., 2 lb. per 5 guns	...
...	...	...	...	...	...	...	As required†	...
1½ lb. per pivot plug for heavy ordnance, 1 lb. per pivot plug for medium ordnance	...	...	...	...	...	...	...	...
...	...	...	1½ lb. per gun	...	...	...	...	...
1 lb. per high angle mounting	...	...	...	...	...	...	...	...
...	...	...	...	...	...	...	...	...

‡ To be mixed with the olive oil.

† *See* foot-notes on pages 368 and 399.

Digitized by Google

Stores for Cleaning and Preservation of Position-Finders.

57
Gen. No. 4604

Stores.	No.	Remarks.
Woolwich Store Charge No. 7.		
Cloth, emery, fine ... sheets	1	
Cloth, glass, ,, ... ,,	1	
Woolwich Store Charge No. 8.		
Wire, brass, hard, No. 12, W.G. feet	1	
Woolwich Store Charge No. 9.		
Solder, tinmans' ... ... lbs.	½	
Woolwich Store Charge No. 11.		
Compound, Chatterton's ... ... oz.	1	
Oil, for instruments ... ... pints	½*	
Oil, paraffin, light... ... ... ,,	1	Annual supply per instrument.
Resin, black ... ... oz.	2	
Woolwich Store Charge No. 25.		
Cotton waste, white ... ... lbs.	2	
Woolwich Store Charge No. 28.		
Cable, firing, electric, twin, Mark II, yds.	3	
Tools, jointers', telegraph— Gutta-percha, 17 B.W.G. ... lbs.	¼	
Not in Vocabulary.		
Linen, old ... ... ,,	2	
Soap, Brooks' monkey brand ...cakes	1†	
Wire, cotton, covered, C. ... ... yds.	1	
Pencils, black lead, H.B....	4‡	
Weedon Store Charge.		
Bits, soldering, 1½ lbs.	1§	
Woolwich Store Charge No. 7.		
Cans, oil, lubricating, armourers' ...	1§	
Woolwich Store Charge No. 10.		Per 10 or less number of instruments in a district, per annum.
Screws, ¾-inch, No. 7, iron, flathead gross	1	
Woolwich Store Charge No. 11.		
Lacquer, black ... ... pints	3	
Lacquer, pale gold ... ... ,,	¼	
Methylated Spirits ... ... ,,	1	
Polish, French ... ... gills	3½	

54
Gen. No. 5647

* Issued in pint bottles biennially.
† Local supply. ‡ Supplied by the War Office on requisition.
§ To be exchanged as they become unserviceable.

Digitized by Google

57
Gen. No. 4604

Stores.	No.	Remarks.
Woolwich Store Charge No. 25.		
Brushes, paint, sash tool, { No. 2 ...	1	
{ ,, 4 ...	1	
Wick, common ... ... lbs.	½	
Woolwich Store Charge No. 27.		
Leathers, chamois...	2	Per 10 or less number of instruments in a district, per annum.
Woolwich Store Charge No. 28.		
Tools, jointers', telegraph—		
Brushes, camel hair, pencil	2	
Lamps, spirit, telegraph equipment ...	1§	
Not in Vocabulary.		
Wood, for battens, mahogany, ¾″ × ½″ ft.	10†	
Terminals, brass (special for Position-finders)	3	
Woolwich Store Charge No. 11.		
Sal-ammoniac, crushed ... ... lbs.	1	Per cell in use, per annum.

† Local supply.
§ To be exchanged as they become unserviceable.

225. Should other articles not mentioned in the table be exceptionally required in certain cases, such articles will be supplied to officers commanding Royal Artillery on special demand, the purpose for which they are required being clearly stated in the requisition. Woollen rags and dressed flax will not be allowed. Extra articles.

226. Emery should on no account be used on ordnance machinery. Rust should first be loosened by coating the part affected with paraffin, and then rubbed off with cotton waste, and the part smoothed with bath brick. Removal of rust.

227. Officers in command of Royal Artillery districts may also demand, on the receipt from store of rifled ordnance, carriages, and slides, requiring to be specially cleaned and lubricated when first mounted on the defences, an additional supply of bath bricks, grease, hemp, and oil, in such quantities, not exceeding one-half the annual proportion, as may be absolutely requisite. Less than one bath brick need not be demanded. Special issues on first receipt from store.

228. In certain positions, such as those of the sea batteries at Portsmouth, where the armament is much exposed, Increased allowance for special positions.

Digitized by Google

the annual proportions of grease and oil may be increased 10 per cent., if necessary.

Lubricants for wheels,

229. In addition to the above, the following proportions of lubricants will be allowed annually for use with wheels, guns, shell lifts, landing gear, &c., and for the preservation of straps and leather work for travelling carriages forming part of the armament of districts or reserves; also for leather ammunition boxes and small store boxes :—

57 / H. Kong / 9064

Dubbing

- 7-pr. R.M.L. battery, without wagons, ½ lb. per gun
- Other batteries ... with " " 1 " " — For straps and leather work.
- " " 1½ " "
- 7-pr. and 2·5-inch R.M.L. (pack transport equipment) in movable armament ... ... — ¾ lb. for each leather ammunition box, and small store box* — 57 / H. Kong / 9064

Grease, Field's†

- 1 lb. per magazine leather hide.
- 1 lb. per 25 pairs of magazine boot or shoes.
- 1 lb. per 100 leather straps, of sorts.
- 3 lbs. per wheel of carriages, wagons, and carts ... — On certificate of commandg. officer that they are in constant use. — 54 / Gen. No. / 5317
- ½ lb. ditto ditto ... ... — When not in constant use.
- 4 lbs. per set of light gear for landing carriages, &c, at sea forts.
- 10 lbs. per rope mantlet.
- 8 ozs. each for three or less winches ... ...
- 6 ozs. each if over 3 and not exceeding 6 winches... — For shell lifts.
- 4 ozs. " 6 " " 12 " ...

Oil, Rangoon

- 1 quart per gyn, crab, or windlass.
- 2 quarts per set of light gear for landing carriages, &c., at sea forts.
- 2 pints each for 3 or less winches ... ...
- 1½ pints each if over 3 and not exceeding 6 winches — For shell lifts.
- 1 pint " 6 " " 12 "

Oil, linseed, boiled.

- 1 pint for "Breech" chain sling, 12 to 25 ton.
- 1 " muzzle " "
- 6 ozs. per fathom of 1½-in. chain ... ... — When used for lashing, &c., in short lengths. — 57 / Portsmouth / 2278
- 4 ozs. " 1-in. " ... ...
- 3 ozs. " ¾-in. " ... ...
- 3 ozs. " ⅝-in. " ... ...

Oil, olive, best quality, lubricating.

- 6 ozs. per fathom of 1½-in. chain ... — When used for falls of cranes, winches, &c. — 38407 / Equipt. / 1675
- 4 ozs. " 1-in. " ... ...
- 3 ozs. " ¾ in. " ... ...
- 3 ozs. " ⅝-in. " ... ...

Soap, soft

- 7-pr. and 2·5-inch R.M.L. (pack transport equipment) in movable armament ... ... — ¾ lb. for each leather ammunition box and small store box* — 57 / H. Kong / 9064

- Linen, old—1 lb. per lamp or lantern ... ...
- Turpentine, spirits of—¼ pint for every 5 lamps or lanterns ... ... — On certificate of commandg. officer that they are in constant use. — 57 / Malta / 8333
- Whiting, fine—2 lb. for every 5 lamps or lanterns ...

Paint, supplied ready for use.

230. The paint required for painting armaments is supplied to the Royal Artillery, prepared ready for use, on demand. In order to ensure that paint may always be in good condition, it will not be drawn from store in larger quantities than are required for immediate use. — 38407 / Equipt. / 1530

* This quantity is sufficient for at least two applications in the year.

† Price's composite grease will be used in place of Field's grease at all stations abroad except British North America and St. Lucia. — 57 / St. Lucia / 558

Digitized by Google

57 Devonport 5000 57 Gen. No. 6227

231. Paint, for painting group symbols alluded to in paragraph 219A, and manning boards for assembly parades, is allowed in such quantities as may be required, on the certificate of the officer commanding Royal Artillery that such quantities are absolutely necessary for the purpose. The paint will only be demanded as it becomes necessary to renew the painting of the group symbols and manning boards, and the date of the last painting should be quoted in the demand.

No driers or thinnings required.

232. As all paint is issued prepared and ready for use, no driers are required. Linseed oil for thinning the paint should, for the same reason, be unnecessary, if the paint is properly stirred up before use.

Descriptions of paint to be used.

233. Paint for painting the exterior of all iron ordnance, carriages, and slides forming the armament of works, will be of the description and colour authorised for the works at the several stations at home and abroad. For other stores, and where colour painting is not authorised, the paints described in Tables C, D, F, and H (pages 148 to 150, 153 to 156, and 161 to 172) will be used.

57 Gen. No. 5228

The quantities of paint for the second coat will be the same as those allowed for the first coat.

Time, working pay, materials and tools for painting.

234. Tables showing the time, working pay, and quantities of material allowed for cleaning, painting, examining, &c., ordnance, carriages, slides, and other stores, together with lists of the tools required for those services, are printed in the Tables in sub-section XXIV, pages 140 to 184.

Prices for piecework.

235. The prices given in these tables are for piecework; the time being added for general guidance in the due performance of the services.

Working pay list.

236. The form of working pay list, Army Form O 1677, will be used for the services to which the tables relate, and will show the various articles in detail, and the sequence in which they appear in the tables.

Superintending N.C.O. not to receive any pay for piecework.

237. The non-commissioned officer superintending a working party will not be entitled to any portion of the amount paid for piecework to the party. His duty will be to see that the work is properly performed, and to keep an accurate account of the work done by each man, with a view to the apportionment of the amount earned among the working party.

Strength of party.

238. Parties of 8 or 10 men will generally be found the most convenient numbers for the proper performance of the duty, and for a non-commissioned officer to superintend effectively.

Master gunners; when not to receive working pay.

239. Master gunners are not entitled to working pay while superintending working parties employed in cleaning, painting, or lacquering ordnance; such superintendence being part of their ordinary duties.

Materials and labour from local tradesmen.

240. At stations where military labour is not readily

Digitized by Google

available, and when it would be more economical to obtain the materials and labour from local tradesmen, the officer commanding the Royal Artillery will follow the course laid down in paragraph 321, Part I.

Supply of Gauges for Projectiles.

M.L. projectiles. Stations of inspection.

241. For R.M.L. projectiles.—Stations of inspection will be supplied as may be required with ring gauges, body and gas checks, and with cylinder gauges (or ring gauges, body and studs, if cylinder gauges are not available), and ring gauge, low over studs.

B.L. projectiles.

242. For B.L. and R.B.L. projectiles.—Stations of inspection, garrison artillery, and the Army Ordnance Department will be supplied, as may be required, with high gauges, and stations of inspection will also be supplied with low gauges.

Gauges for Q.F. ammunition.

243. Stations of inspection, garrison artillery, and Army Ordnance Department will also be supplied with chamber gauges for 6-pr. and 3-pr. quick-firing ammunition.

A.O.D. and Garrison Artillery.

244. The Army Ordnance Department, and garrison artillery, will be supplied as may be required with ring gauges, body and gas check, and ring gauges, body and studs, only; they will not be supplied with ring gauges, low over studs.

S.B. projectiles.

245. For S.B. projectiles.—High gauges and low gauges (wrought-iron), will be supplied as may be required, the issue of the low gauges being restricted to stations of inspection.

High gauges.

246. The dimensions of the high gauges for R.M.L. projectiles are slightly in excess of those of the standard gauges by which the projectiles are received into the service; they, as well as all other high gauges, are issued for the purpose of indicating what projectiles are or are not fit for issue or, if issued, whether from the studs, rings, or coating of the projectiles having been bruised, or from the bodies having been thickened by rust or paint, they are still within such limits as will admit of their being properly loaded and rammed home.

Other gauges.

247. Any gauges of proper dimensions, though not exactly of the present service pattern, will be retained for general use as long as they are serviceable.

15.—INSTRUCTIONS FOR KEEPING THE STORE ACCOUNTS IN ROYAL ARTILLERY DISTRICTS AND OF THE ESTABLISHMENTS ENUMERATED IN PARAGRAPH 265.

Instructions for keeping equipment ledgers to generally apply.

248. The "Instructions for Keeping Regimental and Staff Equipment Ledgers," Part I, Appendix I, being generally applicable, except as hereinafter modified, to Royal Artillery store accounts, will be attended to by all who are concerned in keeping these accounts.

Digitized by Google

57 Gen. No. 4970

249. The officer in charge of an armament district or the officer commanding a militia or volunteer corps, is the accountant (*see* Part I, page IV, Definitions) for all armament or artillery stores in his charge. The former officer will also account for the position-finding and range-finding instruments, and the stores connected therewith in use in his district. Accountant.

57 Gibraltar 4977

38407 Equipt. 1530

250. The store account records to be kept in each Royal Artillery district will be rendered on Army Form G 908A, for every work having an authorised armament or equipment; miscellaneous stores at a work, which do not form part of the authorised armament or equipment, will be accounted for on the blank pages at the end of Army Form G 908A. All other miscellaneous stores not on charge in Army Form G 908A, will be accounted for in Army Form G 885. Stores for moving, mounting and examining ordnance, &c., will be included in Army Form G 908A. Store account records.

38407 Equipt. 1530

A separate account will be rendered for each work, or for each group of works, comprising the unit of charge of a master gunner or non-commissioned officer, as may be found desirable.

251. The accounts on Army Form G 908A and G 885, will show the quantities in possession on the date of opening, the receipts and the issues, and the balances remaining on the date of closing the accounts, of all stores which should be recorded therein (*see* paragraph 255). Scope of accounts.

252. Except as mentioned in paragraph 253, gas checks will not be considered as components of the projectiles with which such gas checks are used, and will be separately demanded, charged and accounted for. Gas checks, demands for.

253. The gas checks for 13-pr., 15-pr., 2·5-inch guns, and 4-inch howitzer shells being permanently attached to those projectiles, are held to be components of the shells and not separate articles of store, and will not be separately demanded, charged and accounted for. Gas checks, components of projectiles.

254. Fuze hole plugs will in all cases be demanded, charged, and accounted for, as separate articles of supply. Plugs, fuze hole, demands for.

57 Gen. No. 5801

255. Materials for repair and preservation of armament or equipment, as well as all stores drawn periodically for expenditure, except ammunition, will not be taken on charge in the accounts. The requisitions for the supply of these stores will show any quantities remaining on hand, and will bear a certificate that the quantities expended of the preceding supply were duly applied. Expendible stores not to be shown.

57 Gen. No. 5801

38407 Equipt. 1530

255A. Ammunition will be taken on charge and dealt with as laid down in paragraph 87, Part I. Ammunition taken on charge.

256. Models, specimens, sections of shells, fuzes, and tubes for instructional purposes will not be shown in the accounts, but accurate lists of such articles will be kept in Models, &c., not to be shown in the accounts.

Digitized by Google

the instruction rooms and district office, and they will be dealt with in the same way as lithographs, official books, printed records, and maps, under paragraphs 106 and 107, Part 1.

Keeping accounts.

257. The master gunner or non-commissioned officer in charge of stores will keep the store accounts under the orders of the officer or accountant in charge of the armament district, who alone will be responsible for any loss that may occur, and will, when each of the accounts in his armament district is balanced on the 31st March of each year, check, sign, and transmit one copy to the Under Secretary of State for War, War Office. Each account will be accompanied by the vouchers referred to in the transactions recorded in it. A duplicate copy of each account will be retained in the work to which it refers. Each voucher will be signed by the accountant, and the date of entry in the account will be noted on it. 38407 489

Correspondence in connection with equipment.

258. The accountants will correspond direct with the Army Ordnance Department on all matters connected with demands, requisitions, and questions concerning stores forming part of their authorized equipments, except in cases of condemnation, or loss of stores, when the circumstances will be reported to the officer commanding Royal Artillery in the district, and the instructions contained in paragraphs 73 to 83 of Equipment Regulations, Part I, will be followed. Correspondence connected with any proposed addition to, or reduction of the authorized equipments should be addressed by the accountant concerned to the lieutenant-colonel commanding, for submission to the officer commanding Royal Artillery and general officer commanding.

Demands for stores.

259. Demands for stores, and the issues in discharge of such demands will be made for each separate account.

Transfer of charge.

261. Upon the transfer of charge from one accountant to another, a verification of stock, by a board of officers need not be made, unless at the request of either the officer handing over, or the one taking over charge, as laid down in Part I, paragraph 12.

Stores for experimental purposes, &c.

262. Stores issued to Royal Artillery districts for experimental purposes, or for proof of mountings, will be at once taken on charge and accounted for in Army Form G 908A; such stores will be kept distinct from other stores forming the armament of any work or position.

Certificate of cleaning materials, &c., demanded and expended.

263. Accountants in charge of armament districts, and officers commanding militia and volunteer corps, will furnish with the store accounts rendered by them a certificate that only the authorised proportions of ammunition, cleaning material, &c., have been expended in their respective charges. 38407 Equipt. 1530

Digitized by Google

38407 Equipt. 1658

264. Exchanges of component parts of guns, mountings, &c., will be shown in the accounts in the manner indicated in paragraph 13, of Appendix I, Part 1. If, however, the two transactions do not occur in the same period of account, explanatory cross references will be given instead on each of the vouchers concerned.

Stations where special form of accounts are kept.

265. At each of the undermentioned stations accounts will be prepared in manuscript, on Army Book 209A, or 209B, C, or E (as may be found necessary).

Shoeburyness School of Gunnery.

Woolwich { Royal Artillery District Staff. / Royal Military Academy. / Royal Military Repository.

Accounts to be accompanied by balance sheets.

266. These accounts, when transmitted to the War Office, will be accompanied by balance sheets, which will be exact transcripts of the remain as shown in the ledgers, and should agree with the quantities actually in possession on the 31st March in each year.

Method of keeping special accounts.

267. The instructions for keeping the store accounts of works or positions do not apply to the stations specified in paragraph 265. All stores received in or issued from these stations will be accounted for in the ledgers, except that the ledgers of the Royal Military Repository will show only those stores which are to be accounted for in the accounts of works or positions.

Agreements with vocabulary of stores and actual issues.

268. Great care is to be taken in all accounts that the stores are described in exact accordance with the Vocabulary of Stores in force for the time being, and further that the descriptions, numbers, and quantities shown in vouchers and ledgers agree in all respects with the stores actually received, issued, and held on charge. Stores issued in sets will be accounted for as directed in the Instruction for keeping regimental and staff equipment ledgers, Appendix I, Part I.

57 Dover 2510

Half-yearly returns of gunpowder.

57 Portsmouth 1736

269. The half-yearly returns of gunpowder on charge (Army Form G 865), and gunpowder expended (Army Form G 862), will be prepared by the armament major, or other officer in charge of an armament district, and forwarded to the officer commanding Royal Artillery of the district, who will cause a consolidated return to be compiled from these several armament district returns, and forwarded to the chief ordnance officer for transmission to Purfleet.

Digitized by Google

16.—INSTRUCTIONS FOR THE PRESERVATION, INSPECTION, AND FITTING OF ORDNANCE, CARRIAGES, ROPE MANTLETS, LIFTING JACKS, PROJECTILES, &c.

	PAGE.
I.—Ordnance, Carriages, Slides, &c., generally	64
II.—Care and Preservation of Ordnance and their Fittings	65
III.—Inspection of Ordnance	68
IV.—Instruction for the Care, Preservation, and Examination of Machine Guns	94
V.—Rules for Furnishing Annual Returns	95
VI.—Instructions for Removing and Replacing Axial Vents for R.M.L. Guns	96
VII.—Instructions for Re-filling Graduations in Elevating Arcs, Traversing Arcs, and Yard Scale Plates	96
VIII.—Carriages, R.M.L. Heavy Guns	98
IX.—Carriages for Medium Guns	101
X.—Siege Travelling Carriages	102
XI.—Slides, L.	104
XII.—Slides, L., for Medium Guns	106
XIII.—Beds for Howitzers	107
XIV.—B.L. Gun Mountings	107
XV.—Care and Preservation of Carriages and Slides, L.	108
XVI.—Instructions for the Care and Preservation of High Angle, 9-inch, Mark III Carriages	113
XVII.—Instructions for the Erection, Working, and Preservation of Disappearing Carriages	115
XVIII.—Turntables for Heavy Guns, and Machinery for Mounting and Working Heavy Guns in Sea Forts	127
XIX.—Rope Mantlets	130
XX.—Hydraulic Lifting Jack, Tangye's pattern	131
XXI.—Hydraulic Lifting Jack, G.S. pattern	133
XXII.—Projectiles	134
XXIII.—Winches and Chains Fitted in Shell Lifts	138
XXIV.—Tables of Tools, Time, Working Pay, and Materials, for Scraping and Painting Ordnance, &c.	140

I.—ORDNANCE, CARRIAGES, SLIDES, &c., GENERALLY.

Tools for repairing armaments.

270. Tools for the repair of ordnance, as also for garrison carriages and slides, are allowed to all stations as detailed in paragraph 201.

Armament of fortresses cleaned and painted biennially.

271. All ordnance, carriages, slides, and stores connected therewith, forming the armament of fortresses, and projectiles exposed to the weather, will be cleaned and painted biennially; but should it be found on inspection

Digitized by Google

that when mounted on the sea faces of works they are in a bad state from exposure to the spray of the sea, or when in casemates from the damp and dripping, they will be cleaned and painted every year, and oftener if considered necessary by the officer commanding Royal Artillery; on this point, considered as a question of expense, a sound discretion will be exercised. Oftener if necessary.

272. Before the periodical painting of ordnance, carriages, and slides, and the re-painting of sling wagons, drugs, and other vehicles, the officer in immediate charge will apply for the services of the armament artificers to examine and thoroughly overhaul the mountings, wagons, &c. This examination will be carried out under the inspector of ordnance machinery when there is one in the district. Examination of gun mountings.

57
N. Scotia
4248

II.—CARE AND PRESERVATION OF ORDNANCE AND THEIR FITTINGS.

1. General Instructions.

57
Gen. No.
450

273. All ordnance, whether breech-loading, muzzle-loading or quick-firing, will be kept in good preservation, the exterior being protected from the effects of the atmosphere by a sufficient coating of paint, and the bore by being lacquered when not in constant use, or by being well cleaned and oiled during practice. Ordnance to be painted externally and lacquered internally.

274. Before the working parties commence work, the ordnance will be dismounted and placed on skidding, in such a position as to admit of the exterior and interior of the piece being thoroughly well cleaned. Ordnance to be dismounted.

275. In cases where, from the nature or position of the work, it may not be deemed advisable to dismount the pieces, they will be raised out of their trunnion holes to a sufficient height to admit of all parts of the gun being thoroughly scraped and cleaned. Or raised out of trunnion holes.

276. Dismounting, placing on skidding, raising out of trunnion holes, and mounting ordnance in charge of the Royal Artillery, form part of the duties of artillery soldiers, for which working pay is not allowed, and should, when practicable, be performed independently of the working parties. Dismounting, &c., to be performed by the Royal Artillery.

277. Ordnance will be scraped on the exterior (the scrapers or old swords supplied for the purpose being previously sharpened) until the old paint and all rust which may appear beneath it are entirely removed; the sight notches and all marks will be completely cleaned out and rendered distinct, and the ordnance will afterwards be wiped over with a piece of old canvas or cloth. Ordnance prepared for painting.

278. The radial copper vents will be cleaned with the vent-scrapers. Vents.

Digitized by Google

Process of painting.

279. The exterior of the piece will be painted with two coats of paint; the second coat will not be applied until the first coat has thoroughly set, and as, in the process of mounting the ordnance, the paint gets much rubbed, the second coat should be given, when possible, after the piece has been mounted.

Colouring of guns and mountings.

280. Guns and mountings will, where necessary, be painted in colour to harmonise with the surroundings of the work (which will be similarly painted), with the view to lessening their visibility.

Paint, tools, and working pay.

281. The paint to be used will be in accordance with the description approved for the several stations and works. The proportions for each piece are shown in Tables C and D, pages 148 to 150, and the necessary tools for painting in Tables A and B, pages 140 to 147. The time and working pay allowed for scraping, cleaning, and painting are stated in Table E, pages 151 and 152.

Preservation of bores.

282. The bores of all ordnance, when not in use, will be lacquered;* but when in frequent use they will be kept clean and slightly oiled instead. At the close of each day's practice they will accordingly be washed and placed under metal and as soon as dry will be oiled with a greasy sponge (a sponge cloth tied over the piasaba brush), and the muzzles closed with tampeons or caps. When the practice for the year is over, the bores will be lacquered, the vents plugged, and the bright parts about the breech of B.L. and R.B.L. guns dealt with as directed in paragraph 290, and the breech screws, vent-pieces and all other fittings, as directed in paragraph 291.

Lacquering bores.

The lacquer can be removed in a few minutes by brushing the bore with hot potash solution. The proportions of lacquer are given in Tables C and D, pages 148 to 150. The lacquer will be applied by means of brushes attached to holders (*see* Tables A and B, pages 140 to 147); one to lacquer the sides of the bore, the other the end of the bore.

Royal Artillery to keep bores of guns in order.

283. It is the duty of the Royal Artillery to keep in perfect order the bores of all ordnance in their charge, and working pay is not granted for this service.

Pin of breeching loop block.

284. In the case of 64-pr. converted guns of 71 cwt., the pin which secures the movable block of the breeching loop in its place should be kept in good order, and at times taken out to prevent its getting fixed by rust.

---

* The lacquer consists of—

Lead	black	24 lb. 8 oz.
	red	6 ,, 12 ,,
Lamp black		12 ,,
Oil, linseed, raw		9 gallons.

Digitized by Google

285. In the case of ordnance having gas escape channels, the latter will always be kept clear, the outer ends being merely stopped with plugs of greased tow when the guns are not in use. Gas escape channels to be kept clear.

2. Preservation of Sights.

57 Devonport 5184

286. When mounted in exposed positions, or in batteries accessible to the public, unguarded by sentinels, all the sights (except screw pattern fore-sights of R.B.L. guns) will be removed from the ordnance and kept in store, the sight recesses in the guns being filled with a plug of greased tow to keep out the rain and dirt. These plugs can be readily removed when it is required to fit the sights to the ordnance. Particular attention will be paid to the prevention of rust or grit accumulating in the sight recesses. Sights to be removed from ordnance in exposed positions.

287. The set-screw for clamping the centre hind-sight, not being removable from the socket, will be tested to see that it works freely. Set-screw to be tested.

288. The sights themselves will be kept clean, free from grit, and oiled; the sliding leaf, as well as the collars of the fore-sights, should have free play. Sights to be kept clean.

289. The exposed portions of the sights of rifled ordnance are bronzed if made of gunmetal, and blued if of steel, in order to preserve them from corrosion, and on no account will these parts be cleaned or burnished in such a manner as to remove the bronzing or blueing. The screw pattern fore-sights of 7-inch R.B.L. guns will be kept painted. In the case of sights for S.B. ordnance, the fore-sight is kept painted as well as the block which is used with the hind-sight on guns and carronades. The tangent scale sights are kept clean and oiled, and should on no account be polished. Sights not to be polished.

3. Preservation of Fittings.

290. The breech-screw and bright parts of B.L. and the mechanism of quick-firing guns in store, or mounted where rarely or never used, will be coated with the grease detailed for that purpose in the table at pages 48 to 55. Fittings of B.L. guns to be coated;

291. When R.B.L. guns are not in use, the vent-piece, breech-block, and all the fittings, except the breech-screw and elevating plates, will be removed and laid up in store. In the case of B.L. guns all fittings excepting the bronze frame will be removed. or removed.

292. The muzzles of guns and howitzers—as also the breech end of the bores of R.B.L. guns—will be stopped with tampeons to keep out moisture; and vent plugs will be used with mounted R.B.L. and R.M.L. ordnance. Muzzles and vents to be stopped.

Digitized by Google

Muzzle to be depressed.

293. Ordnance, whether mounted or lying on skidding, will be depressed at the muzzle to prevent rain or moisture lodging inside.

Elevating plates.

294. Elevating plates will be removed for transport, and the holes in the gun filled with preserving screws.

Lanyard guides.

When removed.

295. All garrison ordnance are furnished with lanyard guides to overcome the tendency of the tubes to be partially pulled out of the vent. When the guns are not in use the lanyard guide will be removed, and the hole filled up with a preserving screw.

Preserving screws.

296. Guns fitted for land service have the friction tube pin holes filled by preserving screws, which should be occasionally removed and oiled to prevent their becoming fixed by rust.

Fixing screws.

297. All fixing screws should be occasionally removed and oiled.

4. Transport.

Transport.

298. In preparing ordnance for transport, the sights (except fore-sights of 16-pr. R.M.L. guns), together with all fittings which would project beyond the surface of the ordnance, and be liable to injury during transport, will be removed, and the holes filled either with preserving screws or with tow and tallow.

16-prs. in possession of R.A.

299. In the case of 16-pr. R.M.L. guns the fore-sights will be covered with tallow, and protected by the wood packing-block issued with the guns from the Royal Gun Factory. This block extends across the trunnions, and protects both fore-sights, and will be kept on charge for transport purposes.

Land transport of smaller natures.

300. For land transport the smaller natures of guns are packed in boxes. Ordnance of greater calibre than 20-prs. will have no such protection.

III.—INSPECTION OF ORDNANCE.

73
3
4056

1. General Instructions.

Final condemnation.

301. Ordnance must be frequently examined at out stations; but as it requires great practice and experience in order to become a competent judge of the various defects and conditions of all the different natures of ordnance in the service, final condemnation will be pronounced only by the Inspector-General of Ordnance.

Provisional condemnation.

302. In all cases, however, where there are sufficiently serious defects, or if there be any doubt as to the serviceable state of the piece, it must be provisionally condemned, pending final decision.

Period of service at which examination is to take place.

303. All ordnance will, as far as possible, be examined regularly after the following numbers of rounds, and practice from such ordnance should cease until such examination takes place :—

Digitized by Google

73
3
4056

Natures.		Number of Rounds with Projectiles.
B.L.*	16·25-inch	16
	13·5-inch	16
	12-inch to 8-inch	25
	6-inch to 4-inch	50
	12-pr.	150
Q.F.	6-inch, 4·7-inch, and 4-inch	100
	12-pr. and under	150
R.B.L.	7-inch	100
	40-pr. and under	150
R.M.L. †	35 tons and upwards	32
	12-inch, 25 tons to 9-inch	50
	8-inch howitzer, 7-inch, 6·6-inch gun and howitzer, 80-pr., 64-pr., and 13-pr.	100
	6·3-inch howitzer, 40-pr. and under, except 13-pr.	150
S.B.	Firing 10-lb. charges and upwards	100
	Firing under 10-lb. charges	200

57
8
7762

304. For purposes of computation, four rounds of blank charges may be considered equal to one round with projectile, but in recording the rounds on the memorandum of examination, blank rounds should be shown as such. Ordnance used for saluting purposes, or for time guns, should, however, be examined at least once a year, or oftener if necessary.

305. These instructions, however, will not apply to experimental guns, or to service guns used for experimental work, which will be examined according to special orders.

306. In all cases, however, should there be any appearance of fissures about the vent (*see* paragraph 385 (*e*)) or defects likely to develop, guns will be examined more frequently, at the discretion of the inspecting or examining officer. Special cases.

307. For home service, the arrangements laid down in paragraphs 309 to 311 will be carried out for ordnance in charge of the Royal Artillery, including that of the militia and volunteer artillery, and Royal Naval Reserve. Examination of ordnance at home.

308. In those districts where there are not inspecting officers, Army Ordnance Department, as soon as a gun has fired the prescribed number of rounds since last examination, as laid down in paragraph 303, or require to Districts where there are not officers of the staff for

* Lined guns and 8-inch Mark VI, 9·2-inch Marks VI and VII, 10-inch Marks III and IV, 12-inch Mark VII, 13·5-inch Marks III and IV. will be examined after firing double the number of rounds shown against their respective calibres in the above table.

† Rifled guns, such as those in R.N.R. Batteries which fire one-third elongated projectiles, and two-thirds solid smooth-bore shot with special charges, may fire double the number of rounds in each series.

Digitized by Google

57
8
7762

Inspection of warlike stores.

be examined from any other cause, a notification of the same will be sent to the chief inspector, Woolwich, on Army Form G 875, by the officer commanding Royal Artillery in the district, and practice from the gun will cease until a decision has been made known. Gutta-percha impressions, properly labelled (*see* paragraph 344), should accompany the report.

Examiner and artificer from R.G.F. to visit each district periodically for guns on Royal Artillery charge.

309. An examiner from the inspection department (guns and steel), and an artificer from the Royal Gun Factories will visit all districts (except the Southern, Western, and Cork districts, *see* para. 312) periodically, or when required, to examine ordnance which has fired the prescribed number of rounds, and other guns if necessary and to perform the requisite repairs. The armament artificer serving in the district will, when available, be associated with the examiner in carrying out such examinations and repairs.

Examiner to hand copy of report to officer in charge of guns.

310. The examiner will hand a copy of his reports upon Form 132 to the officer in immediate charge of the guns, for early transmission to the officer commanding the Royal Artillery district, to enable that officer to complete his annual return as prescribed in paragraph 420. In every case, however, the sentence of the examiner will be confirmed or otherwise by the chief inspector, Woolwich.

Guns in R.N.R. batteries.

311. Guns in Royal Naval Reserve batteries, except those at the following stations:—

Southsea, Hove, Poole	Southern District.
Exmouth, Brixham, Stonehouse, Fowey, Falmouth, Penzance	Western District.

(which will be examined by the naval inspector of warlike stores), will be examined periodically, or when required, by an examiner from the inspection department (guns and steel), who will be accompanied by an artificer from the Royal Gun Factories to perform such repairs as may be necessary.

Examination in the southern, western, and Cork districts.

312. In the Southern, Western, and Cork districts, where there are officers of the staff for the inspection of warlike stores, when a gun in Royal Artillery charge requires to be examined in consequence of its having fired the prescribed number of rounds, or from any other cause, the examination will be made by those officers on the requisition of the officer commanding Royal Artillery in the district. A report of the

Digitized by Google

57
8
7762

examination will be made on the prescribed form, and forwarded, through the officer commanding Royal Artillery, to the chief inspector, Woolwich, for confirmation; in doubtful cases, a gutta-percha impression should accompany the report for inspection and sentence, and practice from such guns will cease until the decision has been made known.

Examination of ordnance in Royal Artillery charge abroad.

313. At all stations abroad the examination will be made under the direction of the officer commanding Royal Artillery at the station, by an inspecting officer, Army Ordnance Department, should there be one at the station, or, if not, by a duly qualified officer, *i.e.* :—

(*a*) Officers who have passed the advanced class, or the senior class of the artillery college, and who have "*p.a.c.*" noted against their names in the Army List.

(*b*) Officers who have satisfactorily passed through a course of instruction and qualified themselves as firemasters, and who have received a certificate to the effect that they are so qualified.

A report of the examination will be made on Army Forms G 869, G 872, or G 925, and forwarded through the same channels as laid down for the annual return (*see* paragraph 420). In such cases the word "Special" will be substituted for "Annual" in the heading of the form. Impressions will always be sent with the report if there is any doubt as to the serviceability of the ordnance examined, or if re-venting or other repairs beyond what can be effected on the spot are deemed necessary, to enable the Inspector-General of Ordnance to give such directions as he may think desirable; all firing from the piece must cease until it is pronounced serviceable.

Ordnance in important positions, &c.

314. If ordnance found unserviceable, or requiring re-venting or repair, as above, are mounted in an important position, or if local circumstances render their immediate exchange necessary, they will at once be exchanged, if practicable, by requisition on the chief ordnance officer, approved by the general officer commanding. In such cases the requisition, after being complied with, will be forwarded by the ordnance store officer to the War Office.

Ships at home remote from a naval ordnance store.

315. When the guns of a ship at home, remote from a naval ordnance store, require to be examined, application will be made by the officer commanding the ship direct to the nearest ordnance officer, who will act as laid down for ships abroad.

Examination of guns on ships abroad.

316. At stations abroad where there is no naval inspector of warlike stores, the guns on board H.M. ships will be examined by the inspecting officer, Army

Digitized by Google

57
8
7762

Ordnance Department, or other qualified officer as laid down in paragraph 313. Requisitions for the examination of such guns will be accompanied by Forms O 21 for B.L., R.B.L., or Q.F. guns, O 24 for R.M.L. guns, and O 22 for S.B. guns. After the examination the sentence will be entered on the Memorandum of Examination, which will afford information to the captain of the ship, and also on the forms which accompanied the requisitions for examination, which latter will be handed to the chief ordnance officer for transmission to the Admiralty as follows :—

In the case of defects.—The duplicate to the War Office for transmission to the Admiralty.

The original, accompanied by impressions when necessary, to the chief inspector Woolwich, through the storekeeper general of naval ordnance.

In case of no defects.—The original only to the War Office for transmission to the Admiralty.

Mode of sentence.

317. No ordnance on board a sea-going vessel should be sentenced otherwise than as serviceable or unserviceable, except in regard to minor repairs, which can be carried out at once on the spot. In a doubtful case the ordnance should be provisionally condemned.

Re-venting at stations abroad.

318. Rifled ordnance can be re-vented at the stations abroad shown in the list in paragraph 201.

Examination after re-venting or repairing.

319. When ordnance are re-vented or repaired in any way, the work, when completed, will be examined by an inspecting officer, Army Ordnance Department, or other qualified person, who will ascertain and report whether it has been satisfactorily carried out; but in all cases impressions before and after repair should be sent through the proper channel for the information of the chief inspector, Woolwich.

Inquiry to be made immediately into the cause of accidents.

320. When any accident occurs, either at home or abroad, such as the bursting of a shell in the bore, the splitting of a vent axial, &c., immediate inquiry will be made into the circumstances, and the ordnance examined. If the commanding officer considers the damage to be of importance, he will send without delay a report of the circumstances through the same channel as his annual return, forwarding, if necessary, for the illustration of his report, gutta-percha impressions of the damage done to the ordnance.

Memorandum of examination.

321. The "Memorandum of Examination" issued with each rifled gun or howitzer will be known by that name, and will not bear an Army Form number. Every rifled gun or howitzer issued from the royal arsenal is accompanied by a "Memorandum of Examination," which contains a record of the material of the bore, and of

Digitized by Google

57
8
7762

the number of rounds fired, as well as the particulars of any slight defects which may exist in the piece at the date of issue. This memorandum will remain in charge of the officer who has possession of the ordnance, and a certificate to the effect that it is in possession, and complete up to date, will be included in the Annual Return of Rifled Ordnance, Army Form G 872, or G 925, as the case may be. At the conclusion of each day's practice with the piece, an entry will be made in the memorandum by the officer in charge, giving a detail of the rounds fired (including blank charges), so that an accurate record of the firing may always be kept up. A statement of the results of the examination of any piece will be added to the memorandum by the officer or other examiner who performs the duty, and when the gun or howitzer is returned into, or issued from, store, the memorandum will accompany the transfer vouchers. If at any time the memorandum be lost or damaged, a duplicate can be obtained from the chief inspector, Woolwich, by whom also inside sheets for continuation of the record of the number of rounds fired will be supplied on demand.

Ordnance in charge of public bodies in the United Kingdom.

322. Ordnance in charge of corporations, Irish Light Commissioners, and other public bodies will only be examined upon special requisition from the body concerned to the general officer commanding the district, who will forward it to the War Office.

2. Instructions for the Guidance of Examiners in the Inspection of Ordnance.

Tools, cleaning, bores of guns.

323. For cleaning the bores of rifled and smooth-bore guns, the tools in Tables A and B (pages 140 to 147) are provided. In the column for remarks in Table B are given the necessary instructions for the use of the tools for smooth-bore guns.

Preparing ordnance for examination.

324. Prior to examination, the bore should be carefully cleaned in order that any defects existing therein, however slight, may be detected. This may be done by washing and brushing it well with water, after which it should be dried and oiled. Should the bore be very dirty, or lacquered, it may be cleaned out by means of potash dissolved in hot water in the following manner.

Method of cleaning with potash and hot water.

325. About a gallon of boiling water is poured on one pound of black American potash, and an old sponge, covered with a canvas cap, or some substitute to make it tight to the bore, is dipped into the solution. The bore is rubbed till the dirt is loose, when the hard brush will remove it; the bore is then wiped dry and slightly oiled.

Digitized by Google

57
8
7762

The potash water must be used very hot, and the sponge must be very tight, or the process is ineffectual. If the dirt be very thick in the small grooves of the R.B.L. guns, a chisel ended searcher may be used. No sharp edged or pointed scrapers should be employed for cleaning the bores of rifled ordnance; they are unnecessary and liable to injure the rifling. If however the bore cannot be thoroughly cleaned by these means, scaling charges may be employed where practicable, *i.e.*, about one third the full service charge (without projectile). Scaling charges must not however be employed in the case of a B.L. gun being fired for the first time and with a new obturator.

Lamp and searcher.

326. The bore, when cleaned, should be examined first by the aid of a lamp; if the surface be slightly oiled, the detection of any defect is greatly facilitated. A pointed searcher may be used to ascertain the position and extent of a flaw; and a spring searcher also may prove to be useful in R.B.L. guns, if applied in such a manner that each groove shall be traversed in succession by one of the points.

S.B. Guns.

327. In smooth-bore guns the whole bore, more particularly the part about the vent, will be thoroughly scraped clean from all paint, rust, &c., by the round, half-round, crown, and chamber scrapers, issued for the purpose.

Mortars.

328. The bores of mortars will be cleaned with the swords and the crown and half-round scrapers, attached to staves of a convenient length for the men to work with.

Examination of Bore.

Tools.

329. For the purposes of this examination, tools are provided for rifled and smooth-bore ordnance respectively. In the periodical examinations it will be sufficient under ordinary circumstances to take impressions of the following parts:—

Impressions required.

(*a*) B.L. guns—Impressions of the whole of the powder chamber, including seat of obturator, and all round the bore at the commencement of rifling. Should the erosion in the bore extend further, another set in front of these should be taken. In the case of *lined* guns impressions of the joint should be taken.

(*b*) R.B.L. guns—Impressions will only be taken where flaws are seen, and, as a rule, of the breech bush in the gun, and of the face of the vent-piece.

R.M.L. wrought-iron ordnance.

(*c*) R.M.L. ordnance—Impressions of the powder chamber all round, showing the bottom of the vent, and the bore for a distance of 3 feet from the commencement

Digitized by Google

57
8
7762

of the rifling, or further, if necessary, to include the whole of the scoring.

(*d*) R.M.L. converted guns—Impressions of the whole of the powder chamber, showing also the cup and the joint where the cup closes the end of the bore. R.M.L. converted guns.

(*e*) S.B. ordnance—Impressions of the crown (curve of powder chamber extending from the vent) and bottom of the vent, and the portion of the bore adjoining. S.B. ordnance.

330. The impressions must be taken with gutta-percha, and instruments are supplied which will generally meet the requirements, but extempore arrangements have sometimes to be resorted to by the examiners. Gutta-percha impressions.

331. The instruments for taking gutta-percha impressions of the bore are all of the same character, but in the case of the 6-pr. and 3-pr. Q.F., and 2·5-inch R.M.L. guns, wedge shaped sticks are provided. Instruments.

332. No. 1 instrument is used for B.L. and Q.F. 6-inch guns, R.B.L. 7-inch, R.M.L. 12·5-inch to 64-pr. (except 10·4 inch), and all R.M.L. howitzers (except 4-inch jointed).

333. No. 2 instrument for B.L., and R.B.L. 20-prs., and guns of 3-inch calibre, R.M.L. 16 pr., and 15-pr. jointed.

334. No. 3 instrument for B.L. 4-inch and 5-inch, R.B.L. 40-pr., R.M.L. 40-pr. and 25-pr., also 4-inch jointed howitzer, and 4·7-inch Q.F.

335. No. 4 instrument for B.L. 8-inch to 12-inch, and R.M.L. 10·4-inch.

336. No. 7 instrument for B.L. 16·25-inch and 13·5-inch.

337. No. 9 instrument for R.M.L. 17·72 inch and 16-inch.

338. Suitable plates are provided for use with these instruments for taking impressions of the bores or chambers.

339. Instruments Nos. 5, 6 and 8 of wood are used for 6-pr. and 3-pr. Q.F., and the 2·5-inch R.M.L. guns respectively.

340. The method of preparing the gutta-percha is as follows :—A sufficient quantity is thrown into nearly boiling water and left until soft ; a steam tank is suitable for this, because the water must not be kept on the boil, otherwise the gutta-percha would soon become spoilt. It must then be kneaded on a smooth board to expel all air and water in order to obtain a smooth surface. Gutta-percha, preparation of.

341. For an impression of a portion of the bore the gutta-percha must be drawn out on the plate of the instrument, taking care that it is not too thick or too broad, and that the surface is quite free from bubbles, creases and specks. When the instrument is inserted in the gun (and this must always be done with great care), Partial impression of the bore.

Digitized by Google

57
8
7762

it is screwed up and allowed to remain there for 10 to 20 minutes (according to the temperature of the air) until the gutta-percha is sufficiently firm. A little soft soap, oil, grease or common soap and water, will prevent the impression from sticking to the plate of the instrument; the bore also should be slightly oiled. Too much pressure must not be applied when screwing up, or the impression will be thin, and when the defect is very deep it will be found difficult to withdraw the gutta-percha. Some practice is required to get good impressions, and several may have to be taken before cracks and hair lines can be distinguished.

Position of defects, how noted in returns.

342. In order to note in returns the position of any flaw or defect, the bore is divided into four parts, up, right, down, and left; the spot may also be more particularly indicated as lying right or left of up, right or left of down. The distance down the bore is always measured from the muzzle in M.L., B.L. and Q.F. ordnance, but in the chambers of R.B.L. guns the measurement is taken from the breech; the quartering of the chamber in this case is similar, but right and left always refer to the position of the examiner at the gun.

Circumferential defects.

343. Circumferential defects are noted round the bore in the direction of the movement of the hands of a clock—*e.g.*, a defective weld might be described as extending from up to right of down at 32 inches, or a coil mark from 27 inches right of up to 29½ inches left of down.

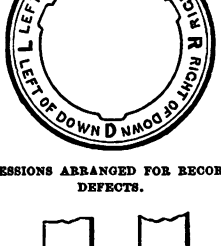

IMPRESSIONS ARRANGED FOR RECORDING DEFECTS.

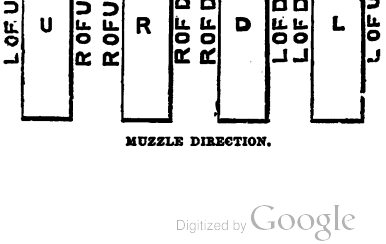

MUZZLE DIRECTION.

Digitized by Google

57
8
7762

Label to be gummed to impression.

344. When an impression is forwarded with a return, for report or decision, a label will be gummed to the back, showing the name of the station, the date of taking the impression, the direction of the muzzle, the nature and number of the piece, the number of rounds fired, and the position of any defect (if it be in any part but the vent), defined according to the directions. The impression should be reduced to the smallest dimensions compatible with showing the whole of the defect.

Defects in the Bore.

Cast-iron S.B. guns.

345. In cast-iron guns the bore is liable to be corroded if exposed to the weather, or to snow, or to the action of salt water and spray near the sea; occasionally also a flaw in the metal may occur. Generally speaking, however, the defects which condemn such pieces will be found in the vicinity of the vent.

346. It is not easy to lay down any rules to guide the examiner in provisionally condemning a piece; a great deal must be left to his experience and judgment; but for cast-iron ordnance it may be generally stated that cavities less than ·1 inch deep in rear of the trunnions, and less than ·2 inch in the muzzle end of the bore, need not cause suspension of firing unless the edges are jagged and liable to retain pieces of cartridge.

347. With rifled guns the defects which are likely to be found may be classed under three distinct headings, viz.:—(1) Original, (2) Fair wear, and (3) Accidental.

Tool-marks.

348. (1) Original—These are generally "tool marks," or slight irregularities and scratches caused in manufacture during the boring and rifling. A chip of steel or grain of sand getting between the machine and the surface of the bore will cause marks of this kind, while the emery powder used in lapping, may leave very fine marks.

With steel tubes, on account of the hard surface of the metal, fine lines become very apparent, and they have at times been mistaken for cracks when running lengthways in the bore. To an experienced person however the difference is easily recognised.

Fair wear.

349. (2) Fair wear—There is a great variety of defects which may be included under this head. In many cases they depend upon the material of the "A" tube.*

"Scoring" in R.M.L. guns.

350. "Scoring" is caused by the rush of gas out of the chamber and over the top of the projectile in R.M.L. guns where there is considerable windage. It takes the form of longitudinal furrows, some of which will generally

* The material of which the "A" tube is made has for some years past been stamped on the face of the muzzle, and it is also entered in the Memorandum of Examination.

Digitized by Google

increase more rapidly than others, and become deep irregular channels. All guns are liable to this kind of wear; in small pieces of ordnance it may be slight, but when heavy charges are used the surface of the metal is soon eaten away to a serious extent. In R.M.L. ordnance, which have enlarged chambers, the chief scoring will be found on the front slope of the chamber, and thence for two or three feet down the bore. In unchambered guns the deepest part will be over the seat of the projectile, and along the loading side of the grooves. 57 8 7762

Limit of scoring for gas-checks.

351. It is worthy of notice that scoring has never caused the destruction of a R.M.L. gun on service, though it must tend towards failure of the tube eventually. Guns have formerly exhibited an enormous amount of erosion, but since the introduction of gas-checks the furrows have not attained any very great size; and so long as a rifled muzzle-loading gun is serviceable for firing projectiles, it may be used with studded projectiles and Mark II gas-checks, or with studless projectiles and their gas-checks. 38437 Equip. 1608

Scoring in B.L. guns (unlined).

352. Scoring in B.L. guns is found chiefly on the front incline of the powder chamber, and thence for one or two feet down the bore. So long as the scoring continues to increase gradually in proportion to the number of rounds fired, it may be considered as of no great importance; no hard and fast rule can, however, be laid down respecting the amount of erosion that may be allowed to take place, and the inspecting officer must use his discretion as to when repair should be recommended, the shooting of the gun, &c., being taken into consideration. Should, however, sharp furrows or streaks be found to develop in the field of scoring or elsewhere they should be very closely watched, and if found to develop abnormally in depth or length, the gun should be provisionally condemned and impressions forwarded to the chief inspector, Woolwich, for sentence.

353. In the case of guns where the strength of the gun depends upon the integrity of the A tube, streaks of scoring of whatever length should be very closely watched, and a small impression taken and kept with the memorandum of examination of the gun for comparison at the next examination. Guns of this class should be examined after firing half the prescribed rounds laid down in their memorandums of examination. This rule should apply to all guns except the following:—

B.L. 8-inch Mark VI, 9·2-inch Marks VI and VII, 10-inch Marks III and IV, 12-inch Mark VII, 13·5 inch Marks III and IV, field, Q.F., and lined guns.

354. Should it be found that a streak is extending more rapidly than the rest of the scoring, or should at any time

Digitized by Google

57
8
7762

the slightest appearance of a crack be found at the bottom of the streak, or should the streak extend continuously from the slope of the powder chamber into the bore, the gun should be provisionally condemned.

Defects in the bore of lined guns.

Split liners.

355. As a liner is merely a provision by which the interior of the bore can be from time to time renewed, *lined* guns may continue to be fired in cases of emergency, although the liner or bush at the rear of the same is split.

356. The gun is safe under these conditions because, in calculating its strength, the material of the liner is not taken into account. Experience has shown, moreover, that firing with a split liner causes no injury to the body of the gun.

357. If the split extends over the obturator, or if the bush at that part is split, a slight escape of gas may be expected to the rear.

Turning of half liner.

358. A gun fitted with a half liner, or with one extending as far the "Alpha" tube, may continue to be fired nothwithstanding that the liner has turned so that the rifling at its forward part is no longer in accord with the rifling in advance of it—this irrespective of the amount of difference—because the result of such turning is merely to cause the copper of the driving band to be re-engraved. This process demands so comparatively slight an exercise of power, as to be practically inappreciable as regards stress on the gun, it is incapable of causing a retardation in the velocity of the shot, or of more than very slightly reducing the normal acceleration of that velocity, at this point. Certain heavy guns have the chamber and bore liners separate.

Bore liner.

359. When this construction is adopted "guttering" occurs at the joint at the rear end of the bore liner. This is of no importance for the reasons given when considering the question of split liners (*see* paragraph 356).

Endway movement of liners.

360. Small movement of a liner forward, or to the rear, is of no importance, provided that in the latter case the efficient closing of the breech be not interfered with, for the reason given with reference to split liners (*see* paragraph 356), viz., that a liner is not an integral part of the structure of a gun.

Flaws in liners.

361. Flaws in liners are not of importance for the reasons given in paragraph 356 unless they show signs of developing to a serious extent, in which case the gun should be repaired as opportunity occurs.

Erosion of the bore.

362. With respect to the safety of lined guns, erosion is obviously an unimportant matter, for the reasons given in paragraph 356.

Digitized by Google

57
8
7762

363. With respect to the shooting of the gun:—The inspecting officer will exercise his discretion as to when it is necessary to resort to augmenting strips, or when repair should be recommended.

Openings between hoops and bending of gun.

364. The bending of the gun and the openings between the external hoops are not necessarily indications of the gun being unsafe.

365. Openings amounting in the aggregate to one-fiftieth of an inch to every foot length of gun in front of the trunnions may occasionally be anticipated for the following reasons:—

366. In building up the gun the shrinking of the hoops on to the "A" tubes puts these hoops not only into circumferential, but into longitudinal tension, and thereby causes an endway compression of the "A" tube. Under the jar of firing, these stresses of tension and compression are relieved, with the result that the hoops contract lengthways, and that the "A" tube seeks to re-assert its original length. The result of such a condition of things is the opening between the hoops, and the relieving the gun of the stresses of compression or of tension, as the case may be, which it had to bear before the firing took place.

367. A shortening of the "A" tube of varying amounts also occurs during oil-hardening. This shortening, under the stress and vibration of firing, occasionally, disappears in whole, or in part, thus causing openings between the hoops.

368. The process of oil-hardening in some instances warps the "A" tube. The jar from firing sometimes causes the "A" tube, which has been turned and bored in this warped condition, to become unwarped, and a bent tube is the result.

369. In cases where the bending of the gun, and openings between the hoops continue, six-monthly reports are to be made.

General defects in the Bore.

Wearing of the grooves.

370. Wearing of the grooves may take place in all rifled guns, but more especially in R.M.L. ordnance, with which studded projectiles are used; it will generally be noticed in guns which have iron barrels, and those with steel tubes, which have a uniform twist in the rifling. Scoring will tend to obliterate very shallow grooves, but the result is rough and irregular. The wear from friction will present a different appearance, and it is of greater importance because the studs might at last "over-ride" or get shorn off in the bore.

Digitized by Google

57
8
7762

371. "Coil marks" and "defective welds" can only appear in guns which have a tube of coiled iron. The term coil-mark is applied to the lines which may be found running spirally round the surface of the bore, due to the manufacture of the "A" tube by coiling, where the weld has not been quite perfect. They are generally not very deep and consequently are of little importance. When, however, they happen to be large or serious in character, they are called "defective welds." This term is also applied to a defect at the junction of the different lengths, from imperfect work in the process of uniting together; in this case the flaw would run circumferentially Unless there is reason to believe that a defective weld is rapidly increasing, or some material change is observed from its state at a former inspection, the gun need not on this account be condemned. Speaking generally, the depth of a defect is of more importance than its extent, but should a defective weld run right round the bore, or even two-thirds of the way, the piece would be liable to break in two at this part, and it should then be recommended for exchange. Coil marks and defective welds.

372. "Specks," "spots," and "pin-holes" are terms applied to small cavities in iron barrels, which are generally produced by cinder or dirt in the iron, or by blisters, &c. They sometimes occur in clusters, and are usually disclosed to view after the surface has been removed by erosion. Specks, spots, and pin-holes.

373. Experience has proved that flaws and defective welds are of little importance in guns not exceeding the size of the 7-inch R.B.L. The importance depends in a measure on the position of the defect, one in rear of the trunnions, and especially in the powder chamber being more dangerous than one of the same nature and extent in the forward part of the bore, because the powder gas will act much more rapidly upon it, and if ragged it might hold a piece of ignited cartridge. Very few instances have occurred in which coil-marks have been the cause of an accident, or in which the defects have increased to any material extent after issue, unless such defects have been situated in the powder chamber, and for this reason no guns have been issued for many years past with any but trifling flaws in that part of the bore. Position as a point of importance.

374. "Longitudinal fissures" are peculiar to iron barrels, but only to those which have been made out of solid forged iron. They are caused by the erosion of gas along the lines of the forging, and may be due to defective welding When these fissures are fairly developed, they weaken the barrel (already too weak in a circumferential direction) and therefore they should always be regarded with suspicion. This however only applies to a few 20-pr. R.B.L. guns. Longitudinal fissures.

Digitized by Google

57
8
7762

Cracks.

375. Cracks may occur in iron or steel, but it may be said that they are almost restricted to steel tubes. Steel is free from most of the defects inherent to iron, and generally shows a perfectly clear surface at first, excepting tool marks. Cracks caused by fair wear usually take a longitudinal direction, and then they naturally follow (if they do not originate in) the driving edge of a groove. It is necessary to distinguish between streaks of scoring and cracks, as a crack is at all times sufficient to condemn any piece, although many rounds may sometimes be fired from it with safety, after failure of the tube. This has been proved by firing under precaution one or two guns in which the tube was split, but on service the gun should always be immediately exchanged.

Accidents.

376. (3) Accidental—In this class must be placed all cracks, dents, and abrasions caused by the premature explosion of a shell in the bore, as well as all injury from shot, splinters, &c.

Dents and abrasions.

377. Dents and abrasions are usually caused by the bursting of a shell in the bore. These are, as a rule, of little importance. In one or two instances muzzles have been blown off from this cause; but generally the only result is to cut up and graze the bore more or less. It is found that such injuries seldom interfere with the efficiency of the piece, and an artificer can generally file down any metal set up in the bore. The gun should, however, always be examined after a premature explosion in the bore; a R.M.L. by means of a lamp, and a B.L. by looking through it from the breech.

Further firing in case of doubt.

378. When the examiner is in doubt as to the nature or importance of any defect, and when circumstances permit, it is well to fire a few rounds and then take another impression; if, on comparing this with the first, the defect does not appear to have increased, the gun may be considered serviceable for another series of rounds.

Examination of Vent.

Examination of vent.

379. Besides examining the bore of a piece of ordnance, it is necessary especially to examine the vent-bush itself, and that part of the chamber or bore of the piece where it enters. For this purpose, in S.B. and R.M.L. pieces,

Gauging.

the vent channel is thoroughly cleared and scraped, and then gauged by means of a set of gauges issued for the purpose.

Choke.

380. It is not uncommon to find a choke where the metal has been set up near the bottom of the vent; this should be removed by a drill or rimer before the gauge is taken

Impressions of vents.

381. A clean impression of the bottom of the vent must also be taken. This will be taken with the improved instruments for taking impressions of bores, the plates for which are now fitted with ends to suit the chambers of

Digitized by Google

guns (*see* paragraph 338), or with the instrument provided among the tools for venting ordnance, if this instrument and the proper blocks are at hand.

R.B.L. guns.

382. R.B.L. guns are vented through the breech-block or vent-piece: the mode of examining the same is laid down in paragraph 391.

Ordnance serviceable after re-venting.

383. After re-venting, ordnance will be considered as serviceable for a fresh number of rounds.

Defects as to Vent, and Sentence.

Effects of firing on vents.

384. The effect of firing on a vent is seen either by a gradual increase to the channel of the vent itself, by an irregular wearing away of the bottom, by the metal of the vent setting up, and the gas forming a hollow ring round it, or by fissures or hair lines radiating into the metal of the bore from the edge of the vent bush.

Sentence.

385. Ordnance will be sentenced either for re-venting or condemnation, according to the state of their vents, as follows:—

S.B. converted guns.

(*a*) S.B. ordnance and converted rifled guns.—To be re-vented if 0·3-inch gauge passes down.

Other rifled ordnance.

(*b*) Other rifled ordnance, if 0·275-inch gauge passes down.

S.B. bushed ordnance.

(*c*) S.B. bushed ordnance.—The defects usually found round the vents of bushed pieces are the giving way of the iron round the bush, from the gas getting in between the two metals (*see* Fig. 1, page 84), and the fissures or hair lines which radiate in the iron from the edge of the vent-bush (*see* Fig. 2, page 84).

Ring worn round bush.

(*d*) The metal round a bush begins to give way almost immediately after a piece is vented, forming a hollow ring round it which gradually increases. So long as this wear is uniform, and the edges are not jagged, it is not of importance; and ordnance will not be re-vented or condemned for this cause, until the ring has become 0·1 inch deep, or 0·1 inch wide. If, however, the edges are ragged, or if one side has given way much more than the other, so as to be likely to hold a piece of unconsumed cartridge, the examiner must use his discretion as to sentencing the ordnance, it being impossible to lay down fixed rules for all cases.

Digitized by Google

Bushed Ordnance.—Fig. 1.

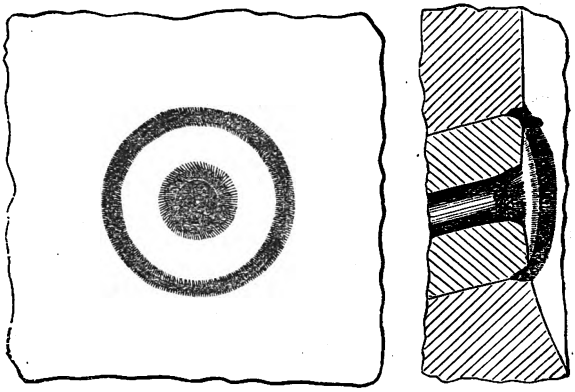

Fissures, or hair lines.

(*e*) Fissures, or hair lines, radiating in the iron from the edge of the bush, will be found in bushed ordnance. There will often be one on either side and a third to the front. The examiner will carefully trace the fine lines on the gutta-percha impressions, and if they extend more than one-tenth part of the circumference of the bore in any direction, measured from the original centre, he will provisionally condemn the piece. One-tenth may be taken as—

68-pr.	....	$2\frac{1}{2}$ inches.
32 „	....	2 „
24 „	....	$1\frac{3}{4}$ „

Bushed Ordnance.—Fig. 2.

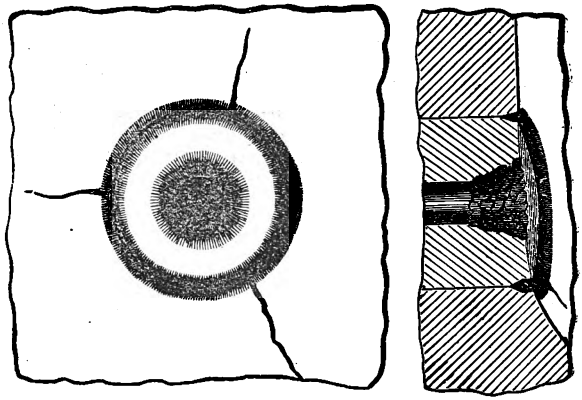

Digitized by Google

(*f*) R.M.L. ordnance. — Should the ring (Fig. 1 above), worn away round bottom of bush, be 0·075 inch wide, or 0·1 inch deep, or jagged and irregular, so as to be, in the opinion of the examiner, likely to retain a piece of cartridge, the gun will be condemned for re-bushing, and if possible with a cone bush. Much wear of the lower portion of the fire-channel in the vent will also necessitate the re-venting of the gun. The amount and nature of wear which should condemn a vent must be left to the judgment of the examiner. Generally speaking, if any sign of fissure of the copper is apparent, or if the thickness of the wall is much reduced in any part, the vent must be condemned. In case of hair lines radiating from the edge of the vent in steel-lined pieces, the gun must be provisionally condemned should the hair lines be 1 inch in length, unless when directly to the front or rear, when the limit of condemnation is smaller ($\frac{1}{2}$ inch) owing to that position being the worst for the development of a crack. The measurements are taken from the edge of the bush

Vents of R.M.L. ordnance.

386. In heavy ordnance with steel barrels, a so-called fissure frequently develops in front of the vent (caused apparently by the rush of gas through the vent-channel). This fissure partakes at first of the nature of a slight scoring. If not attended to, it may increase in depth to a crack. Such a fissure should therefore be filed out and an examiner must use his judgment as to when this operation is necessary, but in no case should such scoring be allowed to attain a depth of 0·01 inch.

Fissures in steel barrels.

387. Although a properly instructed examiner will generally be able, with the aid of the above rules, to sentence a vent either as serviceable for a further series of rounds (as laid down in paragraph 303), or for re-venting, yet many cases will arise in which it will be advisable for the vent to be sentenced as fit to fire some smaller number of rounds, and then to be further examined (*see* paragraph 306). Such cases must be left to the discretion of those whose duty it is to give sentence on the impressions taken.

Discretion as to sentence.

Examination of B.L. Fittings.

388. All removable fittings should be taken entirely apart and examined in order to ascertain that they are quite sound and in proper working order. If the gun is fitted with cup obturation, the copper ring and obturating cup should be carefully examined to see that neither has been cut by the escape of gas. In the case of guns with the De Bange obturation, the pad should be examined to see that the canvas covering is intact, and in proper order

Method of examination.

Digitized by Google

for use. If the pad is found very hard and dry, it should be soaked in a mixture of olive oil and tallow. The protecting discs should also be carefully examined, and if the tin be fused, or the steel rings eroded or broken, should be replaced by new discs.

Examination of R.B.L. Fittings.

Examination of breech-screw.

389. The breech-screw will be examined with the straight-edge, in order to ascertain that the face is quite flat and true; if it be not, it will be filed; the thread should be examined by tapping with a wood mallet, and should not be broken or burred, but a considerable portion may be removed if injured, without destroying the efficiency of the screw.

Lever, tappet, and keep pins.

390. The lever and tappet should be sound. The lever handles of naval guns are sometimes broken off, but the lever can still be used in this state, though not so conveniently. The keep-pins must be sound.

Vent-piece.

391. The vent-piece is the most important fitting, and should be perfectly sound, neither cracked nor bulged. The back and sides, when tested by the straight-edge, should be quite flat and true. The fracture of vent-pieces is frequently owing to the back not being true to the face of the screw. The copper ring on the vent-piece, as well as the breech bush at the end of the barrel, must be sufficiently high to prevent the action of the gas on any part of the iron. The angle face of the 7-inch vent-piece should be flat, and should work truly against the end of the barrel, and the nose should fit closely, but not too tightly, into its place. The vent channel should be in good order. If it is so much worn that a 0·3-inch gauge can pass through, the vent-piece should be returned for repair. A cavity frequently forms at an angle of the vent channel, but this (which should be examined with a probe) does not entail the immediate condemnation of the vent-piece, unless the examiner considers it dangerously large.

Cross-head.

392. The cross-head should not be loose, as instances have occurred of its being broken off while firing. In all cases before taking a vent-piece into use for practice, it will be advisable to test the soundness of the cross-head as well as that of the neck, by tapping with a hammer.

Breech-bush and vent-piece.

393. The bush of a breech-loading gun will be sentenced to be renewed, when it is found to be so much expanded that the gas could escape between it and the tin cup or vent-piece, and when it is not possible to remedy the same by facing.

Copper ring.

In order to prevent serious damage to gun and vent-piece especial attention should be paid, both before and during

Digitized by Google

practice, to the breech-bush in the gun and the copper ring on the face of the vent-piece. If at all dented they should be carefully faced before use. During practice the officer in charge should see that constant attention is paid to these points, and should stop practice with any gun or vent-piece in which eating away of the copper by the escape of gas begins to show itself. When this once sets up, a few rounds are often sufficient to damage permanently the gun or vent-piece.

Vent-pieces to be changed during practice.

394. During continuous practice with 40-pr. R.B.L. guns, the vent-pieces should be frequently changed (say at the end of each 10 or 15 rounds). The vent-piece not in use is thus allowed time to become thoroughly cool, and opportunity should then be taken to carefully examine it with reference to the state of the copper ring, &c. Instructions to this effect are contained in the Handbook for 40-pr. R.B.L. Guns.

Breech-blocks of 40-pr. side-closing gun.

395. The breech block of the 40-pr. side-closing R.B.L. screw gun should be treated in the same way as the vent-piece, which it resembles generally, except that it has no vent, the gun being radially vented.

Drill vent-pieces.

396. For the 40-pr. R.B.L. guns, a special vent-piece with a bronze face is issued for drill purposes, to save the wear on the service vent-piece. It should invariably be used when at drill.

38407
Equip.
1530

Examination of Q.F. Breech Fittings.

Instructions for removing and replacing the breech fittings of the 4·7-inch Q.F. gun.

397. In removing the breech fittings of 4·7-inch Q.F. guns, the following instructions will be observed :—

To Remove Fittings.

(*a*) Elevate the cam-lever, and unlock the breech by giving the lever a smart pull to the left as far as it will go, then swing open the breech.

(*b*) Withdraw the keep pin and washer of the hinge bolt carrier, and remove the hinge bolt; the breech-screw, with carrier and washer, can then be removed from the gun.

(*c*) Remove the keep pin of the contact breech-screw, and withdraw the contact from the end plate; the striker, together with the contact, can then be unscrewed by hand and withdrawn from the breech-screw.

(*d*) Remove the keep pin of the hinge bolt cam-lever, and withdraw the hinge bolt; the cam-lever can then be removed.

(*e*) Depress the spring of the axis pin for link, and withdraw the axis pin; the link can then be removed.

(*f*) Unscrew screws fixing brackets supporting link, and remove the brackets.

Digitized by Google

38407
Equip.
1530

(*g*) Withdraw the trigger-sear and give it one-third of a turn to the right. Unscrew the set-screw nut retaining striker half a turn, so as to clear the nut retaining striker, the latter can then be unscrewed by means of the "wrench A," and the striker holder, together with the nut and main spring, removed from the breech screw.

(*h*) Place the trigger-sear in the electric firing position, and remove the fixing screw. Withdraw the trigger-sear until the square shoulders are clear of the bracket, then unscrew to the left, and remove the two portions with spiral spring.

(*i*) Unscrew screw fixing breech screw, and remove the carrier.

(*j*) Unscrew screws fixing end plate breech screw, and remove the end plate.

(*k*) Unscrew screws fixing trigger bracket, and remove bracket with trigger and lanyard.

EXTRACTOR.

(*l*) Remove cover, and withdraw spiral spring and buffer. Take out the keep pin of the pin axis plate actuating, and remove the axis pin and actuating plate. Remove screw fixing lever, and withdraw the lever. Remove the screws fixing filling piece, when the extractor bolt and filling piece can be withdrawn from the interior of the gun.

(*m*) The fittings are replaced in the rev erse order.

57
Genl. No.
5205

Instructions for removing and replacing the breech fittings of 12-pr. Q.-F. gun.

397A. In removing the breech fittings of Q.-F. 12-pr. guns, the following instructions will be observed :—

TO REMOVE FITTINGS.

Striker.

(*a*) Withdraw the striker from the recess in the retaining nut, and turn the nut one-fourth of a turn to the right or left according to the position of the trigger; the striker with retaining nut can then be withdrawn to the rear.

Carrier and breech-screw.

(*b*) Unlock the breech, and swing the breech screw and carrier into the loading position by giving the lever breech mechanism a sharp pull from left to right. Withdraw the keep pin, and remove the washer of the carrier hinge bolt, and remove the hinge bolt; the breech-screw with carrier can then be taken from the gun.

Lever, breech mechanism.

(*c*) Withdraw the keep pins, and remove the nuts from the axis pin of the lever breech mechanism, and the link actuating breech screw, and remove the lever breech mechanism.

Digitized by Google

(*d*) Take out the screw-retaining axis pin, and axis pin of the link actuating, and remove the link. Link, actuating.

(*e*) Take out the screws fixing bracket, catch retaining, breech-screw, and slide out the bracket, taking care to press in the catch. Unscrew the guide screw, and the catch retaining, with spiral spring, can then be removed. Bracket, catch retaining breech-screw.

(*f*) Take out screw fixing breech-screw, and remove breech-screw from carrier. The sliding block, with brush, can then be withdrawn from carrier. Breech-screw and sliding block.

(*g*) Take out screw fixing safety top, and withdraw the two parts of the safety stop with spiral spring, one in an upward and one in a downward direction. Safety stop.

(*h*) The eye supporting cable can be withdrawn by a straight pull. Eye supporting cable.

(*i*) To remove the trigger, press the projecting end of the spiral spring from the recess in the retaining cap, the cap can then be unscrewed, and the trigger withdrawn from the striker. Trigger.

(*j*) Take out screws fixing, bracket supporting contact, and remove the bracket. Bracket, supporting contact.

(*k*) Remove the cover, and withdraw the spiral spring and buffer. Take out the keep pin of the axis pin, plate actuating, and remove the axis pin and plate actuating. Extractor.

Remove the screw fixing lever, and withdraw the lever. Remove the nut retaining extractor bolt, when the extractor bolt can be withdrawn from the gun.

(*l*) The fittings are replaced in the reverse order. To replace fittings.

398. In removing and replacing the breech fittings of quick-firing Nordenfelt 6-pr., Mark III guns, the following instructions will be observed :— Instructions for removing and replacing the breech fittings of Nordenfelt 6-pr. Mk. III.

To Remove Fittings.

(*a*) Before removing the fittings the drill-stop is placed in the "dismounting hole for mechanism."

(*b*) Open the breech by drawing back the breech mechanism lever, which can then be withdrawn, the hammer and drift being used if required, and the breech-block with wedge and fittings removed from underneath the breech-slot, care being taken to support the block when withdrawing the lever.

(*c*) The drill-stop is removed by placing the pin in the "dismounting hole for drill-stop," and inserting a screwdriver behind it. The extractor may then be removed.

(*d*) The bronze loading shield is attached by one fixing-screw and a dovetail. Remove the screw and tap the shield in an upward direction.

Digitized by Google

(*e*) The bracket trigger-piece is secured by two fixing screws.

(*f*) Unscrew the axis-pin from the right side of the wedge, to perform which the breech-block must be driven back into the cocked position, so as to admit of the lever of the axis-pin clearing the projecting stop on the block (this may be performed by smartly knocking the upper end of the wedge upon the floor or bench); the "action cam" can then be removed, and the breech-block slid from the wedge, the trigger lever falling out during the operation.

(*g*) With a hammer and drift remove the "main spring" from the breech-block from the left side, care being taken that the tappet lever trigger is in the cocked position, the firing-pin and tappet lever trigger can then be withdrawn.

To Assemble Gun.

(*h*) Replace the "firing-pin," "tappet lever" trigger, and "mainspring," in the order given, in the breech-block.

(*i*) The breech-block must then be replaced by forcing it smartly over the wedge into the cocked position, placing the trigger lever in position during the operation by pressing the projections into their seat by the breech-block.

(*j*) Replace the action-cam and axis-pin.

(*k*) Replace the bracket trigger-piece.

(*l*) Replace the extractor and drill stop, placing the pin of the drill-stop in the hole for dismounting mechanism.

(*m*) The breech-block, with wedge and fittings, should now be replaced from the underside of the breech-slot; insert the "breech mechanism lever" and place the "pin of the drill-stop" in the firing-hole.

In replacing the wedge and block care should be taken that the head of the lever of the axis-pin of the action-cam is placed under the stop on the breech block to prevent the block sliding back into the uncocked position. After the breech-block has been replaced in the gun, remove the lever of the axis-pin from under the stop.

(*n*) Replace the loading shield.

Instructions to be observed in removing

399. In removing and replacing the breech fittings of quick-firing Nordenfelt 3-pr. Mark I guns, the following instructions will be observed.

Digitized by Google

To Remove Fittings.

the breech fittings of Nordenfelt 3-pr. Mark I guns.

(*a*) The bracket trigger is attached by means of four fixing screws and a dovetail; remove the screws and tap the bracket in a downward direction.

(*b*) Before removing the breech mechanism the pin of the drill-stop is placed in the dismounting hole for mechanism.

(*c*) Open the breech by drawing back the breech mechanism lever, which may then be withdrawn and the breech-block with wedge and fittings removed from the bottom of the breech-slot, care being taken to support the block when withdrawing the lever.

(*d*) The drill-stop is removed by placing the pin in the dismounting hole for "drill-stop," when it can be withdrawn and the extractor also removed.

(*e*) Unscrew the axis-pin from the right side of the wedge, the action cam can then be removed and the breech-block slid from the wedge.

(*f*) Uncock by pressing the trigger lever. With a hammer and drift remove the main spring from the breech-block from the left side, the "firing-pin," "lever trigger," and tappet lever trigger may then be removed.

To Assemble Gun.

(*g*) Replace the firing pin, tappet lever trigger, trigger lever, and mainspring in the order given, placing the trigger lever between the two arms of the main spring before replacing the latter.

(*h*) The breech-block must then be replaced, forcing it smartly over the wedge until it is in the cocked position, the trigger lever being kept in its proper position by pressing the projections into their seat in the breech-block during the operation.

(*i*) Replace the action cam and axis-pin.

(*j*) Replace the bracket trigger.

(*k*) Replace the extractor and drill-stop, placing the pin of the drill-stop in the dismounting hole for, mechanism.

(*l*) The breech-block, with wedge and fittings should now be replaced from the underside of the breech-slot, the breech mechanism lever inserted, and the pin of the drill-stop placed in the firing-hole.

Instructions to be observed in removing and replacing the breech fittings of

400. In removing and replacing the breech fittings of quick-firing guns, Hotchkiss 6-pr. and 3-pr., the following instructions will be observed :—

(*a*) Unscrew the wedge-stop on the left of the breech with the aid of a tommy; the wedge with its fittings can then be withdrawn from underneath the breech-

Digitized by Google

Hotchkiss 6-pr. and 3-pr.

slot, and the extractor removed from the left side of the slot.

(*b*) The clamp for the tangent sight is secured in a recess in the gun by the spindle. In order to remove the clamp, the milled head (which is attached to the spindle) should be withdrawn and the clamp lifted in an upward direction.

(*c*) The trigger is held by a screw in the bronze trigger-guard, which is attached to the gun by three screws.

(*d*) The crank-handle is secured to its shaft by a fixing-screw, on removing which the handle and shaft can be withdrawn.

(*e*) The mainspring is removed from the wedge by pressing the spring down and pushing back the retaining cross-head, the rocking shaft is then withdrawn from the right side of the wedge by striking it on the left with a tommy ; the hammer with firing-pin can then be removed, also the trigger sear and its spring.

(*f*) By inserting a screwdriver under the firing-pin and raising the outer end, it can be struck out from one side of the hammer.

(*g*) The face-plate of the wedge is attached by two screws.

(*h*) The fittings are replaced in the reverse order.

Examination of S.B. B.L. Fittings.

Breech-screw.

401. The breech-screw of the 32-pr. S.B. B.L. gun will be examined with the gauge for this fitting. The inner edge of it is laid on the smooth portion of the screw and over the face ; thus any bulge or setting up is detected. The threads of the screw are gauged by the upper edge. Should the threads be set up, the screw would not be condemned unless found not to work readily in the gun. If the screw jams in working, the gauge enables the examiner to detect the defect, which may often be remedied by filing. On no account should any portion of the thread be cut away to remove a crack, &c., as is done in the case of R.B.L. breech-screws (*see* paragraph 389).

Obturating cup.

402. The obturating cup should be turned round when on the breech-screw, and the outer edge inspected for marks and lines indicative of gas in motion. Any such defect on the exterior of the lip would condemn the cup ; cracks in the steel should also be looked for. Care should be taken that the edge of the cup is kept uninjured and free from burrs ; should any burrs or notches be observed, the cup should be removed and replaced by a sound one. Abrasions on the edge of a cup can generally be removed

Digitized by Google

with a dead smooth file. The action of the cup depends on the convex form of the base upon which it rests. When the gun is fired, the flat underside of the cup is forced, by pressure of the gas, to take the form of the base, and the circumference is expanded against the ring of copper which surrounds it. If the underside of the cup should lose its flatness and take a permanent hollow form, it may be packed up by inserting a thin brass disc beneath it. The hollowing of the underside of a cup will manifest itself by a diminution of resistance to the tightening of the lever against the stop. In all reports the number of the cup should be stated.

To remove the cup.

403. When the gun is not in use the cup should be removed from the breech-screw, and kept oiled and free from rust. The cup may be removed as follows:—Unscrew the check nuts with the wrenches (*A* and *B*) issued with the gun, the cup and spindle can then be withdrawn. Reverse the operation in replacing the cup.

Lever.

404. The lever with its handle should be sound.

Copper obturating ring.

405. Gas marks on the obturating ring are detected by placing a light in the rear end of the chamber, and passing the top of the finger over the surface of the ring. The marks will show also on gutta-percha impressions.

Lever, retaining clip.

406. The retaining clip is fixed to the lever by a screw. If the spring be weak, the clip may be taken off and a new spring inserted.

Carrier.

407. If the carrier be found not to work correctly, it should be removed, and the under plate unscrewed. Two small bell crank levers will be found within, stamped "Lever A" and "Lever B"; their spindles may be unscrewed, and the flat spring below "Lever A," or the spiral spring round stop of "Lever B," may be replaced, as also may other damaged parts.

Catch for carrier.

408. If the catch for carrier is a fixture on the breech it should be inspected for soundness and proper working.

Examination of Exterior.

Cast-iron ordnance.

409. In examining the exterior of cast-iron ordnance, the points to pay attention to are the soundness of the trunnions and cascable loop.

Wrought-iron ordnance.

410. Very considerable defects may exist on the exterior of wrought-iron ordnance, without the strength being affected. Occasionally, on firing, one of the outer tubes develops a flaw running round the gun, due to the coil or tube having been in an undue state of tension. Such defects are, as a rule, unimportant, and are easily repaired when the gun passes through the Royal Gun Factory.

Defective welds.

411. Defective welds on the exterior, near the muzzle, are sometimes developed in the "B" tube.

Digitized by Google

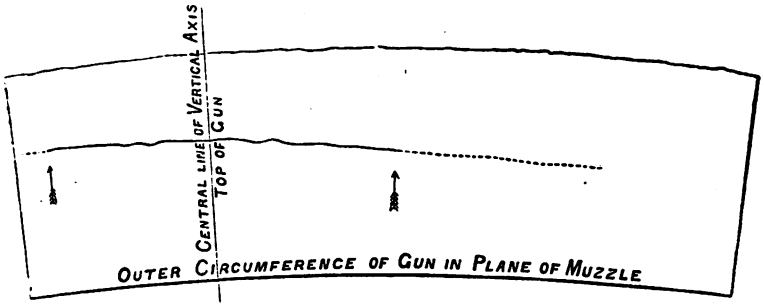

Example. **412.** The above sketch represents a defective weld in the exterior of the "B" tube of a 9-inch R.M.L. gun. The opening, after 7 rounds (2 full, 5 reduced), extended 30·5 inches round the chase at about 12 inches from the muzzle. The gun was then sent to the Royal Gun Factory for examination and repair. It was submitted to the test of firing 40 full rounds, and the crack then extended 16·5 inches further, but no other alteration took place.

Result. **413.** This result shows that defective welds near the muzzle are of no practical moment, and that no ordnance should be condemned on such grounds alone, although it should be exchanged when opportunity offers.

Shell bursting in bore. **414.** If it be found that a shell has burst in the bore, the exterior of the gun will be thoroughly scraped with old swords, and cleaned (with potash water, if necessary), in order to ascertain whether it is perfectly sound.

Shifting of coils. **415.** It also occasionally happens with wrought-iron ordnance that the outer coils shift on firing; if, on examination the shifting is found considerable, the ordnance will be provisionally condemned, but a slight shift, which is sometimes perceptible when the piece is first used, and which has gone no further afterwards, may be disregarded. Unless there be reason to suspect damage on the exterior, it will not be necessary to scrape the whole of the paint off the exterior whenever a gun is examined.

B.L. guns. **416.** For B.L guns the exterior should be carefully looked over in order to ensure that the metal is sound. Openings may appear between the hoops on the chase; these, however, if slight and uniform all round, may be considered unimportant, and should be hammered up.

Large defects. **417.** Large defects on the exterior will be noted on the "Memorandum of Examination" (*see* paragraph 321).

IV.—INSTRUCTIONS FOR THE CARE, PRESERVATION AND EXAMINATION OF MACHINE GUNS.

38407 Equip. 1456

418. Instructions for the care, preservation and examination of Machine Guns, are laid down at pages 64 to 92

Digitized by Google

of the "Instructions for Armourers, 1892," and arrangements for their examination and repair by armourer-serjeants will be made by officers commanding Royal Artillery, as directed in paragraph 150 of Part I.

V.—RULES FOR FURNISHING ANNUAL RETURNS OF ORDNANCE.

38407
Equip.
1530

Ordnance in A.O.D. charge.

419. A return on Army Form G 902 of all ordnance in charge of the Army Ordnance Department, will be furnished yearly on the 1st June to the War Office.

Annual return.

420. Returns of ordnance, on Army Forms G 869, G 872, and G 925, will be sent yearly, by officers of Royal Artillery in command of districts, as specified in the Queen's Regulations. These annual returns are forwarded to the War Office for report and record.

Descriptive marks.

421. It is necessary for the identification of ordnance that the descriptive marks should be accurately entered in this return.

Date of last examination.

422. The column headed "Date of last examination" will be filled in from the date of the last inspection, made by an inspecting officer, or other qualified person.

Condition of bore and sentence.

423. The "Condition of bore" and "Sentence" will be taken from the last report made by the inspecting officer, or other examiner conducting the periodical or special examinations ordered; but if the ordnance has not been examined, owing to only a few rounds having been fired from it, these columns may be left blank, unless the commanding officer should see cause to call special attention to the piece.

Number of rounds fired to be entered in return.

424. The "Number of rounds fired" at the date of making the return will be very carefully entered under the several headings; it is exceedingly important, for the sake of the record, that the number should be given correctly. The number of rounds fired with projectiles since the previous examination should also be given.

Also to be recorded from year to year.

425. The number of rounds fired with projectiles at the time of making the annual returns will be very carefully recorded from year to year.

Condition of fittings, and vents.

426. The columns regarding the condition of the fittings of the breech-loading guns, and the vents of muzzle-loading ordnance, will be filled in from the reports of the inspecting officer or other examiner.

Columns for "Remarks."

427. Particulars of any special defect on the exterior or other part of the ordnance will be noted in the column for "Remarks," if not entered in any other part of the return; as also any peculiar circumstance, such as the re-venting of a muzzle-loading gun, the bursting of a shell in the bore, the fracture of fittings, &c. Reference will be made, when necessary, to explanatory documents.

Digitized by Google

Ordnance not fired since previous return.

428. Ordnance which have not been fired since the previous return will be entered in the return; the columns headed "Condition of bore," "Sentence," "No. of rounds fired," and "Condition of fittings," need not be filled in, but the date when the piece was last fired will be entered in the column for "Remarks."

VI.—INSTRUCTIONS FOR REMOVING AND REPLACING AXIAL VENTS FOR R.M.L. GUNS.

To remove the axial vent.

429. To remove the axial vent of the 17·72-inch, 16-inch, and 12·5-inch, Mark II, R.M.L. guns, insert the cradle A, Fig. II, in the bore, take off the socket supporting the vent B, Fig. I, and remove the vent nut C, Fig. I, with the "wrench, nut, vent;" the key D, Fig. I, can then be taken out, and the vent-bolt E pushed forward on the cradle, which is withdrawn.

To insert the vent bolt.

430. Before inserting the vent-bolt, a copper washer F, Fig. I, is placed under the head, and the shank of acorn guide G, Fig. III, is inserted in the vent, which is then passed up the bore on the cradle, pushed into its seat, and secured with the key and nut, which is tightly screwed up.

Sockets supporting vent.

431. In 17·72-inch and 16-inch R.M.L. guns, the socket supporting vent is attached to the breech of the gun, but in the 12·5-inch Mark II it is attached to the interior of the shutter frame.

Care to be taken to prevent powder gas passing under the head of the axial vent.

432. Great care should be taken to prevent powder gas passing under the head of the axial vent between the vent bolt and the vent-hole. Before inserting the vent-bolt, the copper washer, which is placed under the head to prevent escape of gas, should be inspected, and exchanged if defective. The nut that secures the vent-bolt should be carefully tightened up before firing, and after the first round or two further tightened if necessary, as firing may tend to loosen it slightly. The escape of gas, if allowed, will cut through the copper washer and erode the gun, so that a new washer will no longer be effective in preventing erosion, which will increase every round, and eventually necessitate the vent-hole being bushed. The axial vent should be removed, examined, and replaced before and after each day's firing.

VII.—INSTRUCTIONS FOR RE-FILLING ELEVATING ARCS, TRAVERSING ARCS, AND YARD SCALE PLATES.

433. When the colouring matter in the graduations of elevating arcs, traversing arcs, and yard scale plates becomes removed by wear, &c., the graduations will be re-filled locally, according to the following instructions. The operation, in the case of arcs in charge of the Royal Artillery, will be carried out by regimental or armament artificers.

38407
Equip.
1530

Digitized by Google

ORDNANCE. R.M.L. 16 INCH. MARK I.

FIRING ARRANGEMENT

Fig.1.

Wyman & Sons, Lt.d, Lith. 8516. 7. 96

Digitized by Google

Digitized by Google

ORDNANCE. R.M.L. 16 INCH. MARK I.

DIAGRAM SHEWING REMOVAL OF VENT-AXIAL.

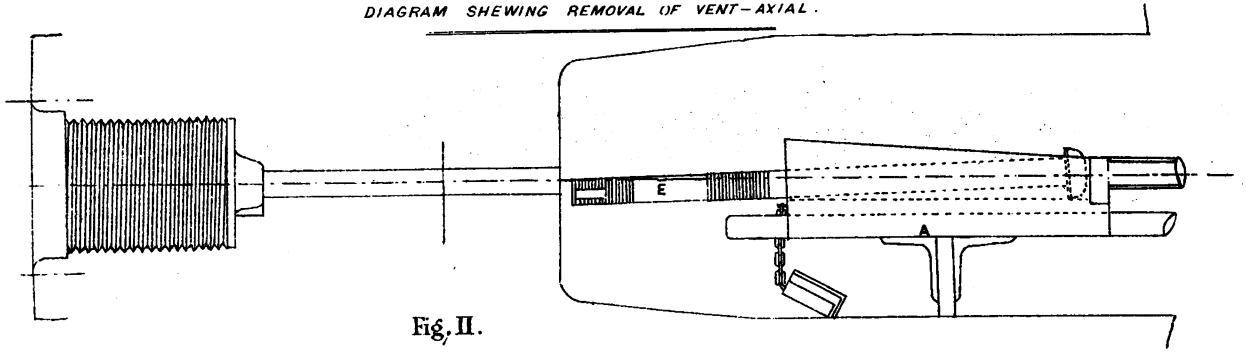

Fig. II.

DIAGRAM SHEWING INSERTION OF VENT-AXIAL.

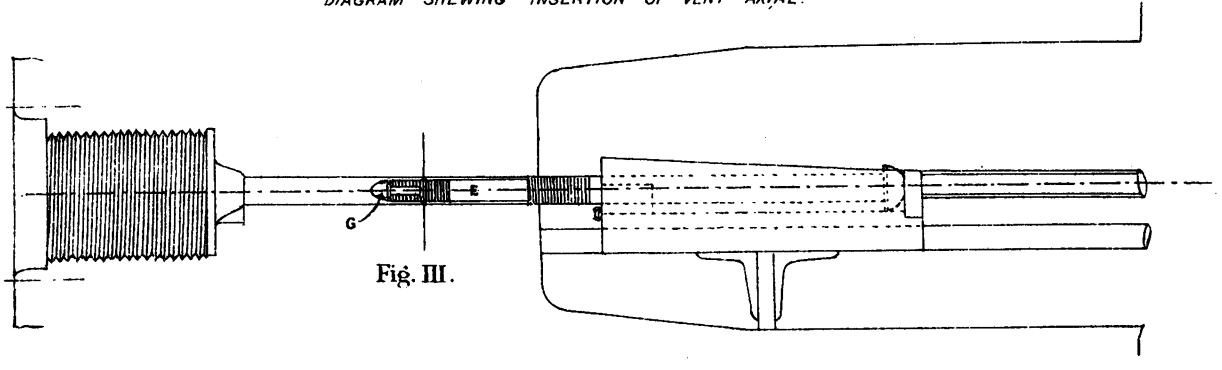

Fig. III.

Digitized by Google

Wyman & Sons, 8.5.96.

to face page 96.

Digitized by Google

1. Operation.

(*a.*) *Arcs, elevating.*

Remove the arc from the gun.

Clean the graduated surface with turpentine to remove any grease or oil.

Coat the surface with magnetic oxide paint.

When dry, coat the surface with the composition supplied (which consists of patent knotting that has been thickened to the consistency of thick paste by means of dry lampblack carefully worked into the knotting).

Clean off the surface with pumice stone and raw linseed oil.

The pumice stone used should be large, and have a flat surface.

(*b.*) *Arcs, traversing.*

Take up the segments required to be refilled.

Clean the surface with pumice stone and water, and carefully dry it.

Fill the marks with engraver's *black* wax, and the figures with engraver's *red* wax, both in a powdered state.

Heat the arc until the wax is melted, taking care it does not boil, and allow it to cool gradually.

When cold, rub off any superfluous wax with pumice stone and water, and replace the segments.

(*c.*) *Scale Plates.*

38407 Equip. 1530

Remove the scale plate from the index plate.

Clean the surface with pumice stone and water, and carefully dry it.

Fill in all the lines, figures, and letters, with engraver's *black* wax, excepting those which indicate 50 yards (the shortest lines) these should be filled with engraver's *red* wax, both being used in a powdered state.

Heat the plate until the wax is melted, taking care it does not boil, and allow it to cool gradually.

When cold, rub off any superfluous wax with pumice stone and water, and then refix the plate.

Stores in the following proportions will be required for this service, and will be issued on demand :—

2. Stores.

For 5 arcs, elevating.

Paint, magnetic oxide	$\frac{1}{8}$	lbs.
Composition	$\frac{1}{8}$	,,
Stone, pumice	1	,,
Oil, linseed, raw	$\frac{1}{4}$	pint.

For 5 segments of arcs, traversing.

Wax, engraver's red	$\frac{1}{2}$	lbs.
Wax, engraver's black	$\frac{1}{2}$	,,
Stone, pumice	2	,,

Digitized by Google

For 5 scale plates.

38407 Equip. 1530

Wax, engraver's	red ...	.... about 1 oz.
	black	.... „ 2 „
Stone, pumice	....	.... „ 8 „

VIII.—CARRIAGES, R.M.L. HEAVY GUNS.

Garrison sliding carriages.

434. Garrison sliding carriages for R.M.L. guns of 7-inch calibre and upwards are made of wrought iron, known as double-plate or single-plate.

Memorandum of examination

435. A "Memorandum of Examination," Army Form G 835, similar to that issued with guns, will be issued with each land service BL. and R.M.L. mounting with hydraulic buffers or hydro-pneumatic cylinders. This memorandum is intended to preserve a complete history of the mounting from the date of its issue from the Royal Arsenal to its final return into store. It is always to be kept with the mounting and returned with it to store. Annual reports of the entries made are to be sent to the War Office through the general officer commanding the district, on 1st April, on Army Form G 832. Where no entries have been made since the last return, a certificate to that effect will be furnished in lieu of the blank returns.

57 Chatham 3729

Alterations or repairs to be recorded.

436. Any alteration due to change of pattern, or any repairs to the mounting, with the dates thereof, must be recorded on this sheet.

Number of rounds fired to be recorded.

437. The number of rounds fired, including blank charges, will be entered by the officer in charge at the conclusion of each day's practice, so that an accurate record of the firing may always be kept.

Result of examination to be added.

438. The result of any examination while on service will be added by the officer or other examiner who performs the duty, and the rounds totalled up to each date.

If lost duplicate to be obtained.

439. If at any time this memorandum of examination be lost or damaged, a duplicate can be obtained from the chief inspector (Woolwich), by whom also inside sheets for continuation of the records will be supplied on application.

1. Double-Plate Carriages.

Nature of.

440. Double-plate carriages consist of iron frames, with a plate riveted on each side.

Gear.

441. These carriages differ with respect to their gear those first constructed, 7, 9, and 12-inch were fitted with the capstan-head elevating arrangement, which is now only retained for the 7-inch, while the 9*, 10, 11, 12 (25 ton), and 12·5* inch are fitted with worm-wheel elevating gear, the 10·4-inch with spur wheel frictional cone gear, and the 12-inch 35 tons with spur pinion elevating gear.

38407 Equip. 1530

* The 9-inch and 12·5-inch are now being fitted.

38407 Equip. 1530

Digitized by Google

442. Loose component parts of these carriages and their gear will be found in the General Lists of Component and Spare Parts, pages 544 to 577, and the following shows the method of attachment of capsquares and clip-plates :— Loose parts.

a. The capsquares are interchangeable on both sides of the carriage, and are secured by keys attached by a chain to each bracket. To withdraw the key it must be turned until the feather finds the slot-hole. Capsquares.

b. The clip-plates are fitted one on each side through the slots cut in the guides, and are secured each by two bolts through the bottom. Clip-plates.

2. Elevating Gear.

443. The capstan-head elevating gear is attached in the following manner :— Capstan-head gear.

(*a.*) In putting on the parts, the pinion with spindle, capstan, and clamp will fit on either bracket, but the pinion with spindle must be placed so that the clamp will jam by turning it to the rear. Putting on the parts.

(*b.*) The pinion spindle is placed through the bracket from the inside, the capstan placed upon the spindle outside the bracket, boss inwards, the feathers entering the feather-ways in the spindle, and the clamps placed on. These articles are placed similarly on each bracket. Method.

(*c.*) The elevating arc may be placed on, either before or after the gun is mounted, but it is more convenient to place it on after the gun is mounted; it is less likely to be damaged, and better out of the way. Elevating arc.

(*d.*) The top of each arc is marked "top," and should be placed accordingly. Marking.

(*e.*) The arc is pivoted to the patch on the gun by a screw, which is marked R or L (right or left), and when the screw is screwed home, a keep-pin is placed vertically through it and the patch. Pivoting.

444. For the 7-inch 6½ ton the elevating arcs are put on in the same way as shown above, and the remainder of the gear as follows :— Elevating arcs.

(*a.*) Pass spindle of steel pinion and bevel wheel through the bracket from the inside; place the jamming lever upon the spindle outside the bracket with screw face inwards; and secure by collar and nuts. Pinion bevel wheel, and jamming lever

(*b.*) Remove caps from brackets; place bevel pinion on the end of shaft, and secure it with collar and screw; place shaft in position from the rear, and secure the caps. Bevel pinion and shaft.

(*c.*) Place hand-wheel on the end of shaft, and secure by collar and nut. Hand wheel.

Digitized by Google

Worm-wheel gear.

445. The worm-wheel elevating gear is fitted to carriages for 9-inch to 12·5-inch guns, except the 12-inch 35 tons, and 10·4 inch (*see* paragraph 441). 38407 Equip. 1530

Component parts of.

(*a.*) It consists of a worm-spindle and worm-wheel placed on the inside of each bracket, and connected with the elevating arc by common toothed pinions.

Working.

(*b.*) The gear is worked by a hand-wheel fixed to the worm-spindle at the rear of the carriage; no clamps are needed to secure the gun from running down.

Only one side to be used at a time.

446. Elevating gear is fitted on both sides of the carriage, and both sets are used together; should, however, circumstances render it necessary or desirable to use either set singly, the side not in use must be thrown out of gear by turning a stud-key and raising a pawl, when the worm-spindle can be turned out of gear; the pawl is then replaced and secured. 38407 Equip. 1530

9 and 12-inch elevating gear.

447. The 9-inch and 12-inch elevating gear differs from that of the 10-inch in being provided with an intermediate pinion to throw the worm-wheel clear of the breech of the gun at high elevations.

Putting on elevating arcs.

448. The elevating arcs are put on in the same way as the arcs of the capstan-head elevating gear; the remainder of the gear as follows:—

Friction roller.

(*a.*) Pass spindle of friction roller through the bracket, and secure by nut and pin.

Pinions.

(*b.*) Pass spindles of pinions 1st, 2nd, and 3rd motion through the bracket, put on collars, and secure by nuts and pins.

Worm-wheel.

(*c.*) Place worm-wheel on 1st motion spindle, put on collar, and secure by nut. Care must be taken that the worm-wheels, which are right and left, are placed correctly in position, and the short boss of the wheel must be placed next to the pinion.

Worm-spindle bearings.

(*d.*) Remove caps of worm-spindle bearings, open the pawl, place the spindle in bearings, secure caps and pawl.

Hand-wheel.

(*e.*) Place hand-wheel on worm-spindle, put on collar, and secure by nut.

3. Running up Gear.

Fitting.

449. To fit the running up gear to the carriage:—

Front rollers.

(*a*) Place the front rollers in position by inserting the axles, and secure by keys.

Rear rollers.

(*b*) Place rear rollers on the axles, and rest them on the slide in rear of the carriage, raise the drop plates by removing the rear bolts of the two which secure them on each side, push the shaft with rollers evenly forward, keeping the eccentrics uppermost until the axles are fairly in the bearings, secure drop 57 Portsmouth 252

Digitized by Google

plates and lever sockets, and bolt on the socket to bracket for running back block, to form the centre bearing for the eccentric shaft.

IX.—CARRIAGES FOR MEDIUM GUNS.

450. The carriages are of wrought iron; "double plate" and "single plate." Nature of carriages.

1. Double-Plate Carriages.

451. The double-plate carriages are:—7-inch 82 cwt., 40-pr., and 20-pr. R.B.L. Double-plate carriages.

452. Loose component parts of these carriages and their gear will be found in the General Lists of Component and Spare Parts, pages 620 to 641. Loose parts.

453. The rollers will be placed in position by inserting the axles, and secured with nuts and keys before mounting the carriage on the slide. Fitting rollers.

454. The R.B.L. 7-inch is fitted with the same description of elevating and running-up gear, and the same method is adopted in putting it on as shown at paragraphs 448 and 449. Gear, R.B.L. 7-inch.

2. Elevating Gear.

455. The elevating gear for 40-pr. and 20-pr. is on the right side. Elevating gear.

456. Elevating arcs are put on in the same way as shown at (*c*) paragraph 443, and the remainder of the gear as follows:— Elevating arcs.

For R.B.L. 40-pr.

(*a*) Pass spindle of 2nd motion pinion through the bracket from the inside, place spur wheel on spindle outside the bracket, and secure by collar and screw. Pinions and wheels.

(*b*) Pass spindle of 1st motion pinion through the bracket from the outside, and secure it inside the bracket by collar and pin; place guard over lower part of spur wheel and pinion, and secure it by screws.

(*c*) Place hand-wheel on end of 1st motion spindle outside the bracket, and secure it by collar and nut. Hand-wheel.

(*d*) Place cramp in position in upper part of guard over spur wheel, and secure it with pin and key; place friction plates in position, and secure the upper part of guard by screws. Brake.

For R.B.L. 20-pr.

(*e*) Pass spindle of pinion through the bracket from the inside, place hand-wheel on spindle outside the bracket, and secure by collar and nut. Pinion and hand-wheel.

3. Hydraulic Buffers.

457. To connect the buffer draw out the piston rod about 10 inches, remove the connecting nut from the piston rod, and run the carriage forward, keeping the Connecting the buffer.

Digitized by Google

rod central until its end projects through the hole in front of slide, and screw on the connecting nut.

Precautions.

458. Before connecting the buffer to the slide the rod should be pushed in and out, to see that it works freely, and that the packing gland is not too tight.

Filling the cylinder.

459. The cylinder is filled in the same way as shown at paragraph 476, except that the depth is not required to be taken at the filling hole. The 40-pr. is filled with $1\frac{3}{8}$* gallons, the 20-pr. with $1\frac{1}{2}$* gallons of mineral oil; $1\frac{1}{4}$* pints is required to be drawn off for the 40- and 20-prs. Oil is withdrawn in the same way as shown at paragraph 476.

460. In cold climates, hydraulic buffers will be filled with service liquid composed of the following ingredients, and in the proportions shown :—

57
Nova Scotia
3916

Methylated spirits	....	....	7 gallons
Distilled water	....	....	$3\frac{1}{4}$ „
Mineral oil	....	....	$\frac{1}{4}$ „
Carbonate of soda	....	....	250 grains

In case of necessity this liquid may be used in buffers, anywhere, as a substitute for oil.

4. Compressor Gear.

E.O.C. Compressor gear.

461. The E.O.C. compressor gear is attached in the following manner :—

Putting on loose parts.

a. To put on the loose parts, the carriage, having been mounted, should be placed with the aperture in the bottom plate over the centre of the diagonal stays of the slide which serve to support the compressor plates.

Metal nuts and rocking levers.

b. Place the metal nuts, and secure the rocking levers in their respective positions, also secure the compressor plates in position at the bottom of the carriage.

Supporting bar.

c. When correctly placed, force the supporting bar into the rear slots, and secure it by the two stops.

Compressor screw.

d. Pass the compressor screw through the bearing in the right bracket of the carriage, and at the same time slip on the metal collar as the point of the screw is passed through the bracket.

Method of placing.

e. Press the screw in until the larger screw reaches the compressor nut; then one man on the outside of the carriage should turn the compressor screw from right to left until the point reaches the adjusting nut, the top end of both rocking levers being kept vertical; another man inside the carriage should turn the adjusting nut in the same direction as the screw is turned, but the nut should be turned about twice to the screw once : continue this operation until the shoulder of the screw bears on the outside of the bracket, then slide the collar up to the inside of the bracket, and place in the key.

* Estimated quantity.

Digitized by Google

f. Now correct the position of the rocking lever, turning the compressor screw so that the top part of the right rocking lever shall be vertical, and turning the adjusting nut so that the top part of the left rocking lever shall be vertical. Correcting rocking levers.

g. Place the adjusting shaft through the bearing on the left side of the carriage, the feathers in the nut entering the feather-ways in the shaft; put on the collar, and secure as in the right bracket. Adjusting shaft.

h. Put on the compressor and adjusting levers, the former vertical and the latter at about 45°, and key the adjusting lever. Compressor and adjusting levers.

5. Single-Plate Carriages.

462. The single-plate carriages are:—7-inch 82 cwt. R.B.L. and the 64-pr. 64 cwt. 6 ft. parapet, 64-pr. 64 cwt. 5 ft. 6 in. parapet, 64-pr. 71 cwt., 40-pr. R.M.L., and the 32-pr. S.B. B.L. Single-plate carriages.

463. Loose component parts of these carriages and their gear will be found in the General Lists of Component and Spare Parts, pages 620 to 641, and the following shows the method of attachment. Loose parts.

464. Elevating arcs are put on in the same way as shown at (*c*) paragraph 443, and the remainder of the gear as follows:— Elevating gear.

For 6 ft. parapet.

(*a*) The same as described for 7-inch 6½ ton.

For 5 ft. 6 in. parapet.

(*b*) Pass spindle of friction roller through the bracket from the inside, and secure by nut and pin. Friction roller.

(*c*) Pass spindle of 2nd motion pinion and spur wheel through the bracket from the inside, place the jamming lever upon the spindle outside the bracket with screw face inwards, and secure by collar and nuts. Pinion, spur wheel, and jamming lever.

(*d*) Pass spindle of 1st motion pinion through the bracket from the inside, place hand-wheel on spindle outside the bracket, and secure by collar and nut. Pinion and hand-wheel.

Carriages R.B.L. 7-inch, R.M.L. 64-pr. 5 ft. 6 in. parapet, and 64-pr. 71 and 58 cwt. are fitted with the same description of running-up gear as shown in paragraph 449. Running-up gear.

X.—SIEGE TRAVELLING CARRIAGES.

465. These carriages are used in garrison service.

1. Hydraulic Buffers.

466. The hydraulic buffer is fixed by a connecting bar to the trail of the carriage, and secured to a central pivot on a double-decked platform. Hydraulic buffers.

2. Elevating Gear.

467. The component parts of this gear will be found in the General List of Component and Spare Parts, pages 620 to 641. Elevating gear.

Digitized by Google

Alternative arrangement used in case of damage to elevating gear.

468. An alternative arrangement is supplied with each 6·3-inch, 6·6-inch, and 8-inch 70 cwt. howitzer carriage to be used in case of damage to the elevating gear, and for shifting the howitzer to or from the travelling trunnion holes.

Details of parts.

469. The following is a detail of the parts :—

	6·3-in.	6·6-in.	8-in. 46 cwt.	8-in. 70 cwt.
Beds, elevating and shifting	1	1	—	1
Coins carriage, No. 5	1	1	—	1
Coins hand No. 4	1	1	—	1
Coins hand ,, 7	1	1	—	1
Rollers, shifting No. 3	—	—	—	1
Rollers, shifting ,, 4	1	1	—	—

XI.—SLIDES, L.

1. Slides, L, for Double-Plate Carriages.

Traversing slides.

470. Traversing slides for R.M.L. guns of 7-inch calibre and upwards are made of wrought iron, and are constructed as "Casemate" and "Dwarf," the former always A pivot, the latter either A, C, or D.

Traversing gear.

471. Those for 9-inch and upwards are fitted with traversing gear, which is worked at the rear by one winch-handle, or at the side by a winch-handle at each end of a cross shaft. In the later manufacture of case-mate slides the gear is arranged so as to allow of the winch-handles working within the length of the slides.

471A. Several slides, 9-inch and upwards, have been modified to admit of their being traversed from a sunken way emplacement when mounted on a concrete drum, such slides are designated "7 ft. parapet 'C'." The traversing gear of those for the 12·5-inch is worked by two winch handles. 38407 Equip. 1637

Parts of slides.

472. Loose component parts for these slides and their gear will be found in the General List of Component and Spare Parts, pages 578 to 619.

To put on loose parts.

To put on these loose parts :—

Slide boards.

(*a*) Place slide board in position on the rear of slide, allowing the studs to fall into the holes in the top of the girders.

Side-arm brackets.

(*b*) Place side-arm brackets in the staples for the purpose on the side of the slide.

Front buffer.

(*c*) Secure front buffer to head of slide by bolts and nuts, place india-rubber rings on spindles pass spindles through, and secure by keys.

Rear buffers.

(*d*) Pass spindles of rear buffers through stops, and secure by keys.

2. Traversing and Running-Back Gear.

Fitting gear to slides. Caps.

473. To fit the gear to a slide—

(*a*) Remove the caps from all the brackets.

Digitized by Google

(*b*) Place the cross shafts opposite the brackets, the pinions being fixed; lift the whole into position, and secure the caps. Cross shafts.

(*c*) Place the collar and clutch pinion on the bollard shaft, insert the end of shaft in the socket of bracket, and secure in rear bracket by cap and collar; pass spur wheel and bollard on to the rear end of the shaft, and secure by keys. Collar and clutch.

(*d*) Pass the double-pinion on the spindle gudgeon, and secure by collar and key. Double pinion.

(*e*) Place the pinion on the winch-handle shaft, and the shaft in the bracket bearings, key on the pinion, and secure cap and collar. Winch-handle shaft.

(*f*) Remove the guide bracket, place clutch lever so that the studs rest in groove of pinion, pass pin through lever and bracket, put on collar, and secure by key, refix guide bracket. Clutch lever.

(*g*) Place the trucks in position, those with bevel wheels at the rear, gearing in the pinions of the cross shafts, insert axles, and secure by nuts. Trucks.

(*h*) Place the blocks for the running-back tackle in position, and secure by giving a quarter turn. Blocks.

(*i*) Place the cover over the double pinion, with bearings resting on winch-handle shaft, and secure by screws. Cover.

474. Care should be taken that the chains of R.M.L. 12·5-inch and 12-inch slides are adjusted to equalize the pull on the sprocket wheels, so as to avoid cross strains and reduce friction in running back. Adjustment of chains.

3. Hydraulic Buffer.

475. To secure the buffer on the slide :— Connecting the buffer to the slide and putting on loose parts.

(*a*) Place the buffer, with piston complete, on the front and rear supporting plates, with the cap taking a fair bearing against the rear transom, keeping the screw plug-hole at top, and the straight part of the cover parallel to the bottom of the carriage.

(*b*) Secure front and rear bands by bolts and nuts, inserting leather packings between bands and buffer. Front and rear bands.

(*c*) Place conical-pointed screw in position through the crown of front band to prevent the buffer from turning. Screw.

(*d*) Move the carriage to the rear sufficiently to enable a man to get at the bracket on the under side; remove the connecting nut from the piston rod, and draw the latter forward until its end projects through the hole in the bracket, keeping it central in the hole; screw on the connecting nut, and when quite tight take half a turn back to allow a slight play of the bracket between the two nuts. Connecting the buffer to the carriage.

Digitized by Google

Precautions.

(*e*) Before connecting it to the carriage, the rod should be pushed in and out to see that it works freely, and that the packing gland is not too tight.

Filling the cylinder.

476. To fill the cylinder, run the carriage up to the stops, take out the screw plug, and rest the gallon measure in the hole; turn off the cock and fill the measure with mineral oil* to the gallon mark, then turn the cock and allow the oil to flow into the cylinder, repeat the operation until the quantity required is run in. The quantity of oil used with the buffers of 7-inch 7-ton, 9-inch, 10-inch, 11-inch, and 12-inch 25-ton guns is 12 gallons, which, with the carriage run out, will give a depth at the filling-hole of about $4\frac{5}{8}$ inches of oil; this depth may be easily tested by a slip of wood. For the buffers of the 12-inch 35-ton 12·5-inch and 9-inch 7-feet parapet "C," Marks II. and III., the following quantities of oil are required :—

12-inch 35-ton	$11\frac{1}{2}$ gallons.
12·5-inch, 6-ft. recoil, casemate....	10 „
„ 7-ft. „ „	$11\frac{1}{4}$ „
„ 6-ft. „ small port	18 „
„ 7-ft. „ „	15 „
9-inch, 7-ft. parapet "C," Marks II. and III.	$45\frac{1}{2}$ quarts (about).

57 Portsmouth 2347

On these buffers a brass plate is attached giving directions for filling. The oil is withdrawn by means of the front cock, air being let into the cylinder at the same time by the removal of the rear plug.

XII.—SLIDES, L, FOR MEDIUM GUNS.

Running in and out gear.

477. Running in and out gear is on the left side for the 6 ft. parapet slides.

Component parts.

478. Loose component parts for these slides and their gear will be found in the General Lists of Component and Spare Parts, pages 654 to 663.

1. Hydraulic Buffers.

Circular hydraulic buffer.

479. The 64-pr. 64 cwt. 6 ft. parapet slide (No. 8) is fitted with a circular hydraulic buffer. Of these, but few have been made, and full details concerning them will be found in the handbook.

Wrought-iron caps.

480. The hydraulic buffers (except circular) are fitted with two wrought-iron caps.

Connecting the buffer to the slide and putting on loose parts.

481. The manner of securing the hydraulic buffer to the slide is the same as shown at paragraph 475 (*a* to *e*), with the following exception at (*a*) :—

For the iron slide 64-pr. 5 ft. 6 in. parapet—

Place the buffer with piston complete on the front and rear supporting plates, with the cap taking a fair

* *See* paragraph 460.

57 Nova Scotia 3916

Digitized by Google

bearing against the rear transom, keeping the screw plug-hole at top.

For the wood slides—

Place the buffer with piston complete on the centre and rear transom with the cap taking a fair bearing against the rear bracket, keeping the screw plug-hole at top.

482. The cylinder will be filled in the same way as shown at paragraph 476, except that the quantity of oil used is 5 gallons and the depth at filling-hole as follows :— Filling the cylinder.

R.B.L. 7-inch	$3\frac{3}{4}$ inches.
R.M.L. 64-pr. 5 ft. 6 in. parapet	$2\frac{3}{8}$ „

2. Compressor Gear.

483. To put these parts on— Compressor gear.

(*a*) Place compressor bars in position, with collars between them, by inserting pins, and secure by split keys. To put on the parts.

(*b*) Pass tripper on spindle, put on collar, and secure by key.

XIII.—BEDS FOR HOWITZERS.

484. There are two kinds of beds, one for the 8-inch 46 cwt., and one for either the 6·6-inch or the 6·3-inch howitzers. A detail of component parts for these Beds will be found in the General Lists of Component and Spare Parts, pages 620 to 641.

XIV.—B.L. GUN MOUNTINGS.

485. B.L. gun mountings are of various types, each with distinctive features requiring special attention, full instructions for which will be found in the handbooks treating of the respective services. For the erection, working, and preservation of disappearing carriages, *see* paragraphs 562 to 622. B.L. mountings.

486. The following table shows the quantity of oil† required for the buffers and pumps of B.L. mountings :— Oil for buffers and pumps.

Gun.	Mounting.	No. of Buffers.	Quantity. For Buffer.	Quantity. For Pump.
12-in.	Yoke mounting ...	2	$14\frac{1}{2}$ gallons	—
10-in.	Barbette, Mark III	2	$23\frac{1}{2}$ „	6 gallons.
„	„ „ II	2	25 „	6 „
„	„ „ I (C and D pivot).	2	*$18\frac{1}{2}$ „	—
9·2-in. ...	Barbette, Mark II	2	25 „	6 gallons.
„	„ „ I	1	* $9\frac{1}{2}$ „	—
8-in.	„ „ I	1	$2\frac{1}{2}$ „	—
6-in.	„ „ I	1	$11\frac{1}{2}$ quarts	—
„	V.C.P. „ I	2	$13\frac{1}{2}$ „	—
4·7-in., Q.F....	Garrison	1	* 5 „	—

* For buffer and tank. † *See* paragraph 460.

Digitized by Google

XV.—CARE AND PRESERVATION OF CARRIAGES AND SLIDES, L.

1. General Instructions.

Iron carriages and slides.

487. Iron and steel carriages and slides, L, of every description require special care to preserve them from the effects of the weather, and to keep them in working order; otherwise they will deteriorate owing to rust, and the working parts will become so corroded as to induce irregularity in action, and will be difficult to work. Particular attention will be paid to the following instructions, which have been framed to apply generally to all mountings. Forms G 907 9

Buffers and gear.

488. Detailed instructions with reference to buffers and gear of R.M.L. 12-inch and 12·5-inch, high angle and B.L. disappearing mountings, will be found in the handbooks.

Gear kept clean and in working order.

489. In batteries accessible to the public, where no permanent protection is possible, or in works where mountings are not frequently used, all detachable fittings and movable parts of the elevating and other gears will be removed and placed in store, where the bright parts of the ironwork will be well coated with Field's grease No. 3, to preserve them from rust. These parts will be thoroughly cleaned and placed in position at least once in three months, to see that they are in proper working order. All other gears should be worked once a week, to ensure their being in a working condition. 57 Liverpool 427

Paint rubbed off.

490. If the paint is rubbed off any part of the mounting, the place should be patched over as soon as possible to prevent rust.

Cleaning and lubricating.

491. A thorough cleaning and lubricating of all standing working parts must take place once a month. In this cleaning all clotted grease must be removed where visible, by scraping, and the parts wiped with an oily rag. Where mountings are much exposed and liable to accumulate dust or sand, they should not be left with much grease or oil upon them, but only sufficient to prevent rust, for which a very slight film will suffice.

Fresh lubricant, how applied.

492. Whenever and wherever fresh lubricant is applied the old should first be wiped or scraped off, and the parts well worked to distribute the fresh lubricant before leaving them.

Gear under slide.

493. The gear hidden under the slide can be examined as to condition by a man lying on his back while the slide is traversed above him.

Glassy substance forming between carriage and slides.

494. It has been found, especially in exposed positions, that a hard glassy cake of oil and sand, &c., will sometimes form between the carriage and slide, which is likely to escape observation, being of a semi-transparent nature, and which induces violent recoils from the very slippery surface it presents. Such a skin has to be hammered off;

Digitized by Google

its formation is best guarded against by leaving as little oil on the sliding surfaces as possible, when not in use.

When not in use position to be changed.

495. When not in use, the position of the carriage and slide will be frequently changed to prevent impressions on the rollers, trucks and racers, and to keep the sliding faces clear.

During practice oily cloth to be used.

496. During practice the top of the slides of mountings not on live rollers should be occasionally rubbed with a slightly oily cloth to prevent seizure.

Precautions before firing or drill.

497. Before firing, or drill, care should be taken that all nuts and screws are properly tightened up; that all working parts are in proper gear; and that all friction cones and brakes are accurately adjusted, and are not jammed. Particular attention should be paid to the clip plates, the bolts of which tend to stretch, and throw undue strain on the guide plates.

Replacing a nut or screw.

498. If a nut or screw be removed it should be slightly oiled before being replaced, and a few turns given to it by hand before using the spanner, to prevent damage by the threads crossing. A burr on the threads of a screw will prevent it being screwed home; the burr can be easily removed by means of a file. A hammer should never be used to tighten up screws or nuts.

Care when removing or adjusting gear.

499. Particular attention will be observed when removing or adjusting any gear not to indent or damage the component parts by rough usage. A hammer should never be used unless with a piece of wood or brass to transmit the blow.

Rollers and trucks.

500. Rollers and trucks will be removed, and the axles properly cleaned and greased before replacing. The front trucks are removed by running the carriage back and lifting the front of the slide by hydraulic jacks, sufficiently high to take the weight off the trucks; care will be taken to block up the slide before removing the axles. For the rear trucks, run the carriage up, place the jacks under the rear block plate, and proceed as for the front trucks. Particular care must be observed when replacing conical trucks that they are in the correct position, viz.:—with the smallest diameter towards the pivot.

Truck brackets.

501. The truck brackets of wood slides must be adjusted so that the trucks are in the right position with reference to the curve of racer, *i.e.*, with the axles truly radial, otherwise the flanges will bite the racer and cause stiffness in traversing.

Racers.

502. Racers should be scraped and cleaned, and well greased at the sides with Field's grease where the truck flanges bite, to render traversing easy. The inner flanges of the trucks and all traversing racks should also be cleaned and well greased. In mountings without traversing racks, the top of the racers should be kept free of grease.

Digitized by Google

Pivots. **503.** Care must be taken that the pivots of mountings do not cause the truck flanges to bear against the racers. Where an error in the position of the pivot or pivot plates appears to exist, it should be at once reported.

Friction gear. **504.** The clamping arrangements or friction cones of elevating gear, brake drums, and the discs of friction clutches, will be cleaned and slightly oiled to prevent seizing.

Differential brake gear. **505.** Differential brake gear will be regulated by the adjusting screws, until the tension of the brake bands is just sufficient to retain the carriage on recoil, and prevent it running out until the bands are slackened by the levers.

Jamming levers and friction cones. **506.** Jamming levers and friction cones of elevating gear will be tightened up by means of the adjusting nuts, so as to allow a slight slip in the gear on firing.

Compressor and preventor gears **507.** The plates and bars of the compressor and preventor gears will on no account be greased or oiled, but should be kept free from rust by scraping, as compression adjusted with a scale of rust between the plates may lead to a violent action after the first round.

Adjusting lever. **508.** The adjusting lever should be set up after each round, for the first three or four rounds, so that the removal of any scale or rust on the bars will not vary the results.

Replacing preventor gear. **509.** In replacing the preventor gear particular care must be taken to place the lever in its correct position to ensure proper working. For this purpose a note must be taken of the number on the toothed collar to which the arrow on the lever points when the lever is removed.

Regulating compressor gear. **510.** Compressor gear is regulated by setting up the adjusting lever until, by the exertion of one man, the compressor lever can be just forced past the stop on the arc.

Iron-pointed levers. **511.** Iron pointed levers and their sockets must never be oiled or greased, but simply cleaned to prevent rust.

Lubricating holes. **512.** In lubricating, the lubricating holes will be cleaned out with a wire and filled with oil, care being taken to replace the small screws, the heads of which must be kept bright so as to be readily seen. One list for each nature of mounting, showing positions of oil holes, and how access is obtained to them, is to be hung up in a safe and convenient place in each work, and none must be neglected. These lists can be obtained on application to the under secretary of state for war; the nature of the mounting being specified. After filling the oil holes the parts should be worked backwards and forwards until the oil shows on the shafting, fresh applications of oil being made if necessary.

57
Devonport
5120

Live rollers. **513.** Carriages with rollers permanently in action should have the roller axles removed, cleaned, and lubricated. The axles can be taken out one by one.

Toothed wheels. **514.** The teeth of all pinions and toothed wheels should be greased.

G.S. jacks. **515.** G. S. jacks should, when not in use, be placed in

Digitized by Google

71
1
5332

the "Frame, store, hydraulic jack," and frequently (at least once a quarter) released and pumped up to maintain a moderate pressure on the leather packings; on release, the jack should descend to its lowest point.

57
Cardiff
442

Hydraulic buffers.

516. The cylinders of hydraulic buffers should be emptied and cleaned out every 12 months; the fluid drawn off may then be filtered and used again if not too thick. The buffers should be carefully examined before firing or drill, to see that the cylinders contain the requisite quantity of fluid marked on the inscription plate; that there is no leakage at the glands; and that the piston rods are properly connected.

To remedy leakage.

517. If a buffer leaks at the gland, and tightening up the latter does not stop the leak, the packing will be renewed. Materials for packing are detailed in Appendix V. (page 229). The buffer will not be removed, but will be left filled and periodically examined (*see* paragraph 97.)

Oil drippings not to be used.

518. Any drippings of oil from the buffer, collected in the drip pans attached to the carriage or slide, should on no account be used on any part of the machinery of the mountings or on any of the gun fittings.

R.M.L. carriages and slides.

519. R.M.L. carriages and slides will be dismounted and the whole of the gear removed by armament artificers at the periodical painting, and all parts cleaned, keys adjusted, bolts and nuts tightened, lubricating holes thoroughly cleaned, the trunnion holes greased and all parts properly lubricated, and any slight defect made good, before reassembling the parts.

B.L. mountings.

520. B.L. mountings will require the same overhaul, but the period may be extended.

Broken parts.

521. Whenever any parts are found broken, defective, or deficient, which cannot be renewed by the artificers, fresh parts should be demanded at once. Any damage occurring at drill, or practice, should be at once reported with a view to its being made good without delay.

Marks, &c., to be quoted in reports.

522. In all correspondence and reports relating to carriages and slides, their exact natures, marks, and register numbers should be quoted.

38407
Equip.
1477

Report of examination.

523. The inspector of ordnance machinery reports quarterly in his district. In districts where no inspectors of ordnance machinery are appointed, arrangements will be made to detail an inspector from another district to make periodical inspections of the gun mountings. The reports on these inspections will be addressed to the officer commanding Royal Artillery of the district concerned, for transmission to the War Office.

Examination of mountings in permanent works.

524. When examining mountings in permanent works particular attention is to be paid to the accuracy of level of the racers—especially on sea fronts. It is necessary that there should be no alteration in elevation, as the

Digitized by Google

slide is traversed from side to side. To ascertain whether this condition holds good, a spirit level should be placed

(1) lengthways on the slide, and

(2) crosswise on the slide,

and the slide traversed from extreme right to extreme left and *vice versâ*; the bubble should remain stationary throughout, and the mounting bear on all its rollers continually.

Adjustment of degree scales.

525. The adjustment of the degree scales of index plates, traversing arcs, or elevation indicators, should also be checked. These should read at zero on the degree scale when the axis of the gun is horizontal. The horizontal position of the gun can be obtained by a spirit level resting on a straight edge in the bore or on the quadrant plane prepared on the breech of the gun.

Copy of instructions to be displayed.

526. A copy of these instructions attached to a board will be hung up in each fort or battery where there are iron carriages. Copies for this purpose, printed on Army Form G 907, can be obtained on demand.

2. Packing for Transport.

Packing fittings

527. Except the capsquares, friction roller, and centre bearing for the eccentric shaft, all the fittings, together with the metal rollers, are removed and packed in a case. The same case may also take fittings of the slide, including traversing gear. The kind of gear packed, the nature of gun for which the carriage and slide is intended, and the register number of each of the latter, will be painted upon the case.

Wood blocks to replace rollers and flanged feet.

528. Wood blocks are placed between the plates of the carriage in the position of the rollers, those in front secured by the roller axles, those in rear by wood pins. Similar blocks are placed in the flanged feet of the slide and retained by the truck axles.

Trucks.

529. The trucks, if fitted for gear, are packed in a case; if not so fitted, they remain loose.

Buffer.

530. The buffer is left in its position on the slide, a wood block being secured over the piston-rod to keep the piston run back and to protect the end of the rod.

Shafts, foot-boards, and side-steps.

531. The long shaft of the traversing gear is lashed beneath the slide; short shafts are packed in the case; foot-boards remain in position; side steps are lashed on.

Compressor bars.

532. If the slide is fitted with compressor bars, they remain in position and are secured by wooden blocks over them fitting between the sides of the slide, and so formed as to jam them all together.

3. Scraping.

Repairs.

533. Previous to being scraped and painted all carriages and slides will be examined, as directed in paragraph 272, and, if necessary, repaired.

Digitized by Google

534. Wrought-iron carriages and slides require a great deal of scraping and cleaning, especially if mounted in open works. Before proceeding to paint them they must be stripped of all their loose parts, and all the old unsound paint, rust, and corroded oil or grease must be thoroughly removed. Scraping and cleaning to be done well.

535. The implements to be used in scraping are old swords, triangular steel scrapers, and scrapers made from old files. Implement to be used.

536. Scraping consists in going lightly over the surface with the scrapers, removing all blisters and loose paint, and forming a smooth surface for the new coat of paint. Care will be taken not to break into the old coat where it is found to be sound. What is meant by scraping.

4. Painting.

537. In repainting carriages and slides care will be taken not to paint any bearings or gearing parts: for instance, soles of trucks, teeth of pinions and wheels, the upper surfaces of the slide on which the carriage slides, the sliding surfaces of the carriage, &c. The carriages and slides will be thoroughly dry when painted. Bearings or gearing parts not to be painted.

538. Racers, racks, soles of trucks, and pivots, will not be painted, but will be rubbed occasionally with an oiled wiper, to prevent rust. Pivot blocks will be painted at the same time as the slides. Racers, racks, &c.

539. The first coat or patching will be laid on lightly in those places which have been laid bare in the repairs, or by scraping. The stopping will be done after the first coat of paint has become set, as in the case of wood carriages. First coat.

540. The second coat will be given after the stopping has been completed. It will be applied lightly and carefully finished off. Second coat.

57 Gen. No. 2823

541. In hot climates the top surface of the shields of disappearing mountings will be painted white to keep the pit cool. Hot climates.

57 Portsmouth 2347

XVI.—INSTRUCTIONS FOR THE CARE AND PRESERVATION OF HIGH ANGLE, 9-INCH, MARK III CARRIAGE.

542. If the recoil cylinders leak at the ram glands, they must be tightened up; if at the rear cap, the cylinder must be tightened into the cap with spanner No. 123, Mark II. To renew the hydraulic packing at the ram gland, lay the gun level, blow off the air pressure by opening the levelling cocks, and empty the buffers by opening the drain cock; unscrew the glands, extract the defective packing, and replace by the new. Leak.

Digitized by Google

57
Ports
2964
57
Portsmouth
2347

543. The recoil cylinders will be emptied and cleaned out every 12 months, the liquid drawn off may then be filtered and used again if not too thick.

Mode of filling buffer.

544. To fill the buffer with the gun up and level, slacken the air screws marked AA at front of cylinder, and pump in about 15½ gallons of liquid at the filling cock C, closing the screws AA when the liquid flows from the openings. Pump in air until a pressure of 400 lbs. per square inch is obtained; close the filling cock C, and lay the gun at 20° elevation. Open the filling cock C and the plugs B, pump in liquid until it overflows at BB, close BB, and pump in air until a pressure of 465 lbs. per square inch is obtained.

Adjustment of valves.

545. The recoil valves are for regulating the recoil of the gun, and great care must be taken on all occasions before firing to see that they are properly set to the nominal lift of ·2 inch. An index plate graduated in 10 divisions (each division equal to $\frac{1}{100}$ of an inch lift) is fitted to the rear cap. A line is cut on the valve cover, which, when the valve is closed, points to zero on the index plate. To set the valve it must first be closed on its seating, and then turned two revolutions to "open" or ·2 of an inch.

Recoil.

546. The recoil measured on the ram should not exceed 21·5 inches for a full charge at extreme angles of elevation.

Leakage, how remedied.

547. If the adjusting arrangement for the recoil plugs, the filling cocks, or the air screws, leak, they must be tightened up; if this is not sufficient, the leathers of the filling cock and air screws, and the lead washer for the recoil plugs must be renewed; to do this, the pressure must be blown off and the liquid withdrawn.

Guides.

548. The guides must be kept free from rust and well oiled, when not in use they must be well greased.

Ball bearings lubricated.

549. The ball bearings must be lubricated with tallow, as oil will run away too quickly. When not in use the bearing screws should be removed and kept clean, and when in use they must be covered to prevent dust or grit getting in.

Adjustment.

550. When setting the gun on ball bearings, the adjustment should be arranged, working the elevating hand wheel at the same time.

Roller path, &c.

551. The roller paths (upper and lower), teeth of traversing rack, underside of clip ring and rollers, should be quite clean and free from burrs.

General Directions.

Examined weekly.

552. The mountings should be kept thoroughly clean, and carefully examined every week. It is most important that grit and dust should be prevented from entering the cylinders.

Digitized by Google

57
Portsmouth
2347

553. After the last round of practice, a well oiled twist of tow should be bound tightly round the rams close to the gland of the cylinders, and left there until the next practice when it should be carefully removed, also any dust that may be adhering. Any dust or grit found on the ram during the firing should be at once removed. Rams protected with oiled tow.

554. The efficiency of the mountings depends, to a large extent, on preserving the packing washers in good order. The cylinders should, therefore, be kept filled with the proper charge of liquid, and under the full working pressure. Preservation of packings.

555. Leakage of pressure is to be noted, and additional pressure pumped in, if necessary, at each weekly examination. Leakage of pressure.

556. All spare leathers should be kept in store, and rubbed occasionally with dubbing to prevent their becoming hard and brittle. Spare leathers.

557. The supply of spare leathers should never be allowed to run low.

558. The axles of rollers, and the bearings of the shafts of the rest of the gear will require periodical cleaning and lubricating in the manner laid down in Army Form G 907. Axles, &c., lubricated.

559. The general directions for Mark III mounting also apply to Marks I and II, but for further detail of care and preservation for Marks I and II, see Handbooks.

560. For description of "pump, air, double," "reservoir," "separator," "indicator," "pressure spring and gauge, dead-weight testing," see Handbooks for guns with which used.

561. The quantity of liquid required for charging the cylinders is as follows:— Quantity of liquid.

9-inch Mark I about 12 galls.
9 „ Marks II and III „ 15½ „

and is that laid down in paragraph 460.

XVII. — INSTRUCTIONS FOR THE ERECTION, WORKING, AND PRESERVATION OF DISAPPEARING CARRIAGES.

1. Erection and Working.

562. Before the erection of the mounting is commenced, the following points must be attended to:— Examination of racers and rollers before mounting.

(*a.*) The racer should be perfectly level.

(*b.*) The roller paths (upper and lower), teeth of traversing rack, underside of clip ring, and rollers should be quite clean, and free from burrs.

(*c.*) It should be seen that the roller ring has not been bent.

563. The rollers and axles must be oiled, placed in the roller ring, and the ring given two or three revolutions on the roller path, before putting on the mounting, to

Digitized by Google

ascertain whether it runs truly, and that every roller bears continually. Two to four men (according to the calibre of gun) should be able to move it freely.

Roller path.

564. The roller path on the underside of the mounting having been cleaned, oiled, and any burrs removed, the mounting should be lifted into position.

Traversing gear attached and tested.

565. The traversing gear should next be attached, and one or two revolutions made to see that the mounting traverses freely. The truth of the racer may be tested here by a spirit level placed on any part of the mounting. As the mounting is revolved, the bubble should remain stationary. The brackets for the pillars supporting the shield, and front and rear holding-down clips having been added, another revolution should be made to ascertain that the clips do not bind on the clip ring. Two men should traverse a 9·2-inch with ease. The chequered foot plates should then be placed in position, and the lever handle of the raising valve keyed on its shaft.

Composition of liquid in cylinder.

566. The liquid for charging the cylinder is composed of the ingredients, and in the proportions shown in paragraph 460, and no other than the authorised liquid should be employed. All cylinders will be issued empty.

38407
Equipt.
1530
71
1
3780

Quantity of liquid.

567. The following quantity of the liquid will be required:—

10-inch	Mark	II	....	....	....	206	gallons.
10	,,	,,	I	....	....	70	,,
9·2	,,	,,	II	....	....	153	,,
9·2	,,	,,	I	....	....	50	,,
6	,,	,,	IV	....	....	26	,,
6	,,	,,	III	....	....	26	,,
6	,,	,,	II and II*	....	....	12½	,,
6	,,	,,	I	....	....	14	,,

57
Jamaica
3911

Indicator attached.

568. Before filling, attach the indicator connection to the filling cock on the cylinder, and fix the indicator in its place, taking care that it is cut off by screwing up the valve of the connection, as otherwise the indicator may be injured by the pumping. It should stand within 15° of the vertical. Attach the copper pipe to the connection.

Mode of filling cylinder.

569. To fill the cylinder (1) open the inlet at the connection, the raising valve, and the plug at the top of the cylinder of the 6-inch, and the stop-cock to "blow off" of the 9·2-inch and 10-inch; (2) close the water-level cock, and pump liquid till it flows out at the top plug or stop-cock.† Close the top plug or stop-cock and raising valve, and pump liquid till it blows out in a spray

Forms
G 915
1

† NOTE.—In pumping liquid with the "Pump, air, double," the pump cisterns must be kept full, and the valve for liquid opened; the strokes must be *slow and steady*, otherwise air may also be drawn in. In pumping air the liquid valve is closed, and the strokes should be quick and jerky.

Digitized by Google

from the water-level cock—which should be opened every now and then to ascertain whether the liquid has risen sufficiently; (3) change the pump to "air." open the raising valve, pump in air till the elevator rises to the "up" position.

Forms G 915 1

In the "up" position two (pencil) marks should be made on the ram, one level with the top of the gland, and the other at a distance from it as follows :—

10-inch	mounting	I	....	46 inches.
9·2 „	„	I	....	42 „
6 „	„	II and II*	....	35 „
6 „	„	III and IV	....	36 „

The upper mark will show the "down" position, and should be used as the datum (so long as the gland is undisturbed), for measuring the recoils, pressure, and water level.

Forms G 915 1

Close the raising valve, and pump the elevator down to the buffer stops, thus seeing that the cylinder and pump are working correctly.

W orkin pressures.

570. Continue pumping in air until the following working pressures are obtained:—

		lb. per □"		lb. per □"
10-inch, Mark I	Gun up	800	Gun down	1,600
9·2 „ „ I		775		1,550
6 „ „ I		570		1,350
6 „ „ II to IV		590		1,250

Forms G 915 1

The elevator should not be let up with the full pressure behind it unless the gun is mounted.

571. For taking these pressures the elevator is "up" when it will rise no further with the raising valve open. Care should be taken not to allow the stops on the ram and cylinder (inside) to come into contact with force, or they may be burred, and the subsequent recoils and elevations affected. The raising valve should therefore be cut off gradually as the ram nears the end of its stroke; this is shown by the arrow heads on the elevator and bracket.

Cut-off chain.

572. It is advisable to adjust the cut-off chain before mounting the gun, though this can be done at any time, and it is adjusted before issue. It should be sufficiently slack to allow the elevator to come fully "up," but without much jerk. The completing of the closing of the valve should be done by hand before pumping down or firing.

Mounting gun and shield.

Forms G 915 1

573. The gun may now be mounted (first securing the elevator by the holding-down links), the elevating rods fixed in position, and the shield put on. The shield segments of 9·2 and 10-inch have lifting loops placed at the centre of gravity; they are turned with the nut on top for housing. The overlapping flanges of these segments

Digitized by Google

should be observed, as the segments must go on in a certain definite rotation.

Elevating arcs and pinions.

574. Particular care must be taken that the elevating arcs and pinions are put together correctly, as otherwise damage will occur. The distance between the centre of the trunnion of the crosshead and the centre of the pin of the elevating arc must be the same on both sides. The correct position of the elevating arcs and pinions for gearing together is indicated by scribed lines on the elevating shaft pinions and arcs, and the two pinions are stamped "Right" and "Left" in addition; the lines on either side should coincide in one position.

Graduations.

575. The degrees marked on the arc guides for quadrant elevation are graduated so as to be correct for the "up" position, and should be checked at zero and maximum elevation and depression with a long base clinometer on the quadrant plane of the gun. The graduations are only correct when the elevator is fully "up," and the gun should never be fired unless it is so. To ensure this, the cut-off chain should be sufficiently slack to allow a slight sound of contact between the stops in the cylinder to be audible to the No. at the raising lever.

Tightening of elevating gear.

576. The friction cone of the "equalising" gear should be tightened just sufficiently to prevent the elevating arcs running down of themselves when the gun is up. This will be arrived at by trial. If there is much slip of the elevating arc on firing, the cone or plates of the elevating gear should be tightened so that 95 lbs. weight hung at a distance of 12·5 inches from the centre of both handwheels of each mounting of the 9·2-inch and 10-inch Mark I and 48 lbs. at a distance of 15 inches from the centre of the handwheel of the 6-inch Marks I to IV should just cause the gear to slip. A slip of 3 or 4 inches of the arc should be allowed. Where the arrangement consists of alternate plates, care must be taken in putting them together that steel does not come against steel, and that the faces of the plates are free from burrs, &c.

Forms G 915 1

38407 Equip. 1572

Raising the gun.

577. Before raising the gun, clear away any covering plates from the shield. For the first time the gun should be put up slowly and carefully, and the cut-off gear re-adjusted for length if necessary. It is always necessary to make sure of the closing before firing, by pulling over the lever by hand when the gun is up.

Release of air in cylinder.

578. The liquid of the cylinder while in the air chambers becomes aërated to a certain extent, and when it passes into the inner cylinder the air is given off and collects at the top. This should be freed by loosening the plug on top of cylinder of the 6-inch, and turning the stop-cock of the 9·2-inch and 10-inch to "blow off" every now and

Forms G 915 1

Digitized by Google

then during the firing, otherwise the recoil may become excessive. The presence of too much air in the inner cylinder may be recognised by the ram "cushioning" at the end of its stroke, instead of coming to a dead stand.

579. In using the lowering pump, the pump handle (which is suspended from the shield when out of use) is put into working position and pinned there. Four or more men are required, according to the calibre of the gun. Care should be taken to see that the gun commences to descend as soon as pumping begins, as it sometimes happens that the gun remains up, owing to friction in the ram gland while the pump is drawing the supporting liquid from under the ram, in which case the gun suddenly falls with violence, and damage is done. If therefore the gun does not fall at each stroke, it should be hauled back with tackle*, pumping meanwhile being continued. In those mountings which have the suction pipes of the lowering pump entering the top of the cylinder, the pump will not as a rule begin to act until the stop-cock has been turned to "blow off" and any air at the top of the cylinder released. When the pumping down is finished, the pump handle should be removed. Lowering guns.

Forms G 915 1

Pumping down is generally made easier by attaching ropes to the handle on either side, on which the numbers may pull, instead of working direct on the handle.

580. If any leak is discovered, it should be dealt with before the gun is fired as described in the instructions for "Care and Preservation." If no leak is observable the firing may commence. Leak.

581. After first erecting, the firing must commence with a $\frac{1}{2}$ charge (with projectile), the recoil on the ram being carefully noted. Recoils on ram.

The recoils, measured on the ram, should not exceed :—

10-inch	I	$\frac{1}{2}$ charge	....	21 inches
		full „	....	45 „
9·2 „	I	$\frac{1}{2}$ charge	....	21 „
		full „	....	41 „
6 „	II	$\frac{1}{2}$ charge	....	20 „
		full „	....	35 „
6 „	III and IV	$\frac{1}{2}$ charge	....	23 „
		full „	....	36 „

582. If the recoil appears too great with the smaller charges, the valves must be adjusted as described below. As a rule the recoil with full charge may be short of the amount shown above, and care must be taken that the elevator does not come hard down upon the buffers when recoiling, as there is danger of the gun fouling the cross-head or front transom of the elevator. Different marks of gun have different outlines ; in mounting the gun for Adjusting valves fo recoil.

* On no account are jacks to be used for this purpose.

Digitized by Google

the first time therefore the clearances there should be looked to. The mountings are designed to bring the gun (with full recoil) to a constant elevation which is unaffected by the position of the elevating arcs, and the height of the buffers is intended to be so regulated as to give this position; but in practice these conditions are not always attainable, and the buffers should not be looked to as a guide. The "down" position as defined above by measurements on the ram, is the proper outside limit of recoil, and it should bring the elevating rods to their "dead centre." But even this condition is not always attained, and it should be borne in mind that it is the worst position of the elevating arcs when the gun is "down" (and cannot be turned on its trunnions with the elevating gear) that must be looked to in checking the clearances.

Forms G 915 1

Elevating band.

583. The position of the elevating band on the gun is of importance in connection with this (and also with reference to the accuracy of the graduations on the arc), and this position should be checked. The distance of the centre of the pivots from the centres of the trunnions should be as follows:—

Distance of pivot from trunnions.

		Perpendicular to Gun axis.	Parallel to Gun axis.
10-inch Mark I	mounting	17 inches	70 inches
9·2 „ „ I	„	15·5 „	65·5 „
6 „ „ II, II* & IV	„	11·28„	47 „

Forms G 915 1

2. Care and Preservation.

Adjustment of Recoil Valve or Valves. (Fig. 1.)

Alterations.

584. When the recoil obtained is not satisfactory, it is adjusted by altering the play of the recoil valve or valves. All valves are set before the mounting is issued. They should not be altered unless absolutely necessary. When once adjusted for a particular charge, mark of gun, and nature of liquid, any continuance of abnormal recoils will probably be due to incorrect air pressure, and the accuracy of the indicator or the liquid level must be suspected first; at the same time an alteration *may* have taken place in the condition of the valves, necessitating an altered setting; before an alteration is made under these circumstances, the valves should be carefully examined, and anything calling for remark reported.

Alteration in pressure.

585. No permanent alteration should be made in the pressure laid down, which should always be worked to, but care should be taken that the pressure indicator is giving the correct record. This can be tested by the dead-weight test gauge supplied. In case of emergency extra pressure may be added to check a tendency to excessive recoil, should such develop itself, and it is desirable to continue firing, but steps must be taken on

Forms G 915 1

Digitized by Google

CARRIAGE, GARRISON, B.L. DISAPPEARING.

6 INCH B L. MARKS II TO IV.

RECOIL VALVE.

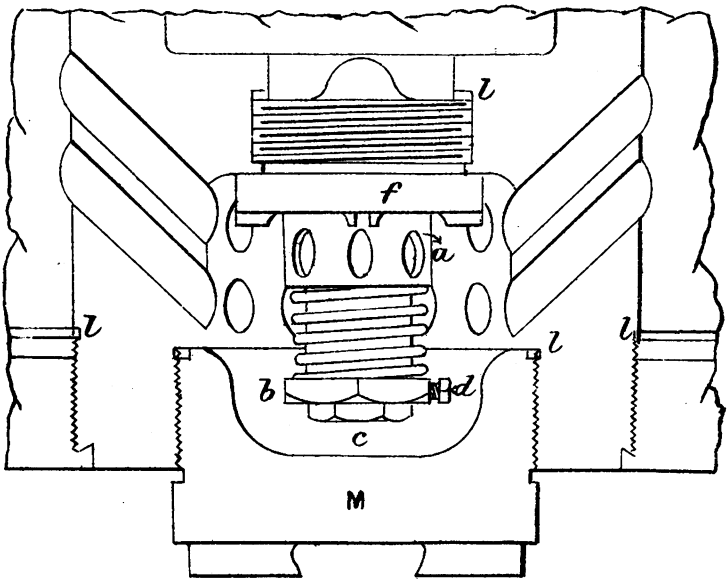

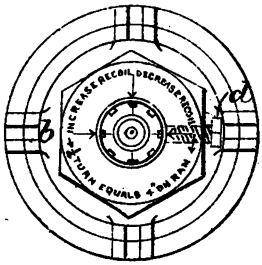

PLAN WITH "c" REMOVED.

Fig. I.

Digitized by Google

Wyman & Sons, L.th Lith 85187 96

Digitized by Google

Digitized by Google

CARRIAGE, GARRISON, B.L. DISAPPEARING.

6 INCH. B.L. MARKS II TO IV.

RAISING VALVE.

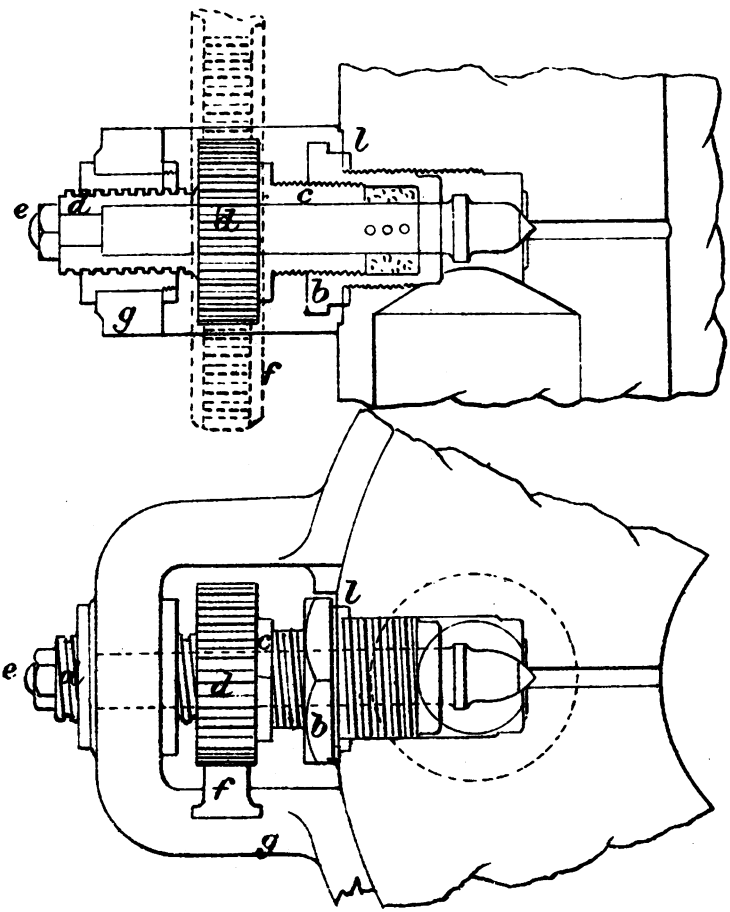

Fig. II.

l. Leather washers.

Digitized by Google

Wyman & Sons, Ltd. Lith. 8616.7.95

the first opportunity to enable the service pressure to be resorted to. Loss of liquid will affect the recoil, and the liquid level must always be maintained. No definite effect in checking the recoil need be expected by any change of pressure under 100 lb. per square inch.

Access to valves.

586. The recoil valves are situated inside the cylinder at the bottom, and to get at them the pressure must be let out at the filling plug or water level cock, and the bottom centre plug* removed, which bares the head of the valve.

Removal of valve.

Forms G 915 1

587. It is not necessary to remove the valve itself, except to renew the lead washers, or clear it of grit in case of a leak.

Adjustment of valves.

588. To adjust the valve or valves (Fig. I), unscrew the stop nut (*c*), and the keep screw (*d*), turn the nut (*b*) until the keep screw comes opposite to the next slot in the spindle, and screw in the keep screw and stop nut again.

Forms G 915 1

The spindle is divided into eight divisions or slots, each division altering the lift ·0104 inches. Detailed information as to the difference made in recoil is stamped on each valve, together with the amount of the normal lift of the valve with which it is issued. This is necessary as a datum, since the adjusting nut can be turned round till it comes off. If it becomes necessary to remove this nut, the opening allowed to the valve after resetting should be measured. The actual amount of lift given is best measured by filing down a slip of metal till it fits the gap left between *b* and *a* where the coils of the spring give access, and then measuring the thickness of the slip.

Firing after alterations.

589. After any alteration or adjustment of the recoil valves, the firing must commence with a ½ charge, as stated in paragraph 581.

Adjustment of raising Valve and repacking its Gland.

(Fig. II.)

Repacking gland of raising valve spindle.

590. The gland of the spindle of the raising valve can be repacked without blowing out the compressed air from the recoil cylinder. If, however, there is a leak from the outer chamber to the inner through the raising valve itself, the pressure must be let out before the valve spindle (*a*) or its seating can be looked to.

591. To repack the gland, fasten the elevator down by the clips, and take off the nut (*e*) on the end of the valve spindle. Remove the stop nut from the end of the rack (*f*), pull out the rack and remove the bracket (*g*) and toothed wheel (*d*) from the valve spindle. The gland nut (*c*) can now be unscrewed, and the gland repacked, care

* This is in the 6-inch, which has but one valve. The 9·2 inch and upwards have more grouped round the centre plug. With these all the valves must be altered together and set alike. Corresponding slots in the spindle are figured alike.

Digitized by Google

being taken not to disturb the gland box unless for the purpose of replacing the lead packing (*l*), when the pressure must be let out, and the gland box screwed up again before the packing of the gland commences. In doing this care should be taken not to use too much force, as the gland box is rather weak. In replacing the gland nut (*c*) it should not be more than a quarter of an inch from "home." Forms G 915 1

Replace the toothed pinion, bracket, and nut; pinch the top of the pinion round from left to right until it can be moved no longer (taking care that it is not bearing against the gland nut), which will show that the valve is bearing on its seating; then pinch it back 38* teeth from the right to left, drop in the rack, and screw in the stop at the end of it; connect up the link in the cut off shaft to the top of rack. Replace the cover of the bracket, release the holding down clips of the elevator, and let the gun rise carefully. When the gun is "up" readjust the cut-off chain.

Leakage.

Signs of leakage.

592. Leakage may be internal or external; if the former, it will probably show itself in a tendency of the gun to rise without opening the raising valve; if external, a dripping will generally betray its whereabouts.

Locality.

593. Internal leaks may occur at (1) the seat of the raising valve, (2) the recoil valve (generally from grit), (3) the lead joint of the recoil valve, (4) the lowering pump. Forms G 915 1

Loss of Pressure.

594. If there is loss of pressure with no sign of dripping, the most probable place is the water level cock; but the leak may be into the ram at the bottom plug. The gun must be skidded up to examine this, and the ram withdrawn and examined to ascertain if it contains water. This leak will only occur during firing, or when the weight of the gun is on the ram. Forms G 915 1

Removal of liquid.

595. If it is necessary to renew the lead joint of a recoil valve or bottom plug, or examine a recoil valve, the pressure must be let out, and the liquid drawn into pails through the "draw-off valve" and the tube supplied for this purpose. Forms G 915 1

Recoil ram gland.

596. If any considerable leakage occurs at the top of the cylinder, it should be stopped at once—if allowed to continue the recoils will soon become too great from loss of liquid. When the glands are in proper working order there should be no leak at all. If leakage occurs, the packing must be tightened, and if this does not stop the leak the packing must be renewed. Forms G 915 1

* With the 6-inch the correct amount for any nature can be ascertained by trial to suit the cut off chain.

Digitized by Google

Renewing hydraulic packing.

597. To renew the hydraulic packing, the gun must first be raised and skidded up; the safest plan is to place suitable skidding across the opening of the shield, and pump the gun on to it. A more expeditious method for the heavier natures, and one attended with less exposure, is to strut the cheeks of the elevator with skids placed against the buffer brackets, but this must be undertaken with every precaution to prevent the skids slipping, the gland or cylinder cover withdrawn and lashed up to the crosshead. Insert the new packing, taking great care to see that it is contained within the recess for holding it before finally screwing down the gland or cylinder cover. Care must also be taken to screw the cylinder cover of the 9·2-inch and 10-inch down evenly to prevent the rings or covers cross jamming.

Forms G 915 1

Rope packing.

598. The packing is the Service "hydraulic"; * it is woven square in section, with rubber core, and supplied by length. For use, it is cut into lengths so as to form rings (with the ends butting) which will just enter the gland box. Two lengths are required to form a packing, to be inserted one above the other so as to break joint. The packing should be well greased with hot tallow before use.

Lifting loops.

599. Lifting loops are supplied to raise the cylinder covers of the 9·2 and 10-inch, and the metal packing rings. The former are also available for the cap squares of the mountings.

Forms G 915 1

Detaching ram from crosshead.

600. When it is necessary to detach the ram from the crosshead, secure the cylinder by lashing to prevent it surging when free (or the pumping gear, &c., will be damaged). In the 6-inch Marks I and II, and in the 9·2 and 10-inch the cylinder is top-heavy; in the 6-inch Marks III and IV, the weight is below the trunnions; arrangements must be made accordingly.

Re-attaching ram to cross-head.

601. When the weight of the cylinder is properly taken by the lashing, &c., remove the nut on the top of the crosshead, the ram can then be pumped down by the lowering pump. To reattach the ram, open the raising valve gently, and the ram should then enter the crosshead again where it may be secured by the nut. Allow the gun to rise, and remove the skidding.

Forms G 915 1

Discovery of leakage.

602. As regards leakage at the ram gland, it should be observed that this should only occur while the gun is in motion, or with the weight resting on the ram. If it happens continuously while the gun is resting on the buffers, it will either be because the raising valve does not close, or because the recoil valve, valve seating, or lowering pump, leaks. If opening the top plug on

Forms G 915 1

* Asbestos packing should not be used, it is too friable.

Digitized by Google

forcing over the lever of the raising valve does not stop the leak at the gland, the fault may be with the recoil valve (or valves); in either case there will generally be a tendency for the gun to rise, and tightening up the ram gland above will of course not stop the internal leak, which should be seen to.

Testing ram gland, packing, and air plug.

603. When the recoil and raising valves are working properly, the best way to test the packing of the ram gland is to fasten the gun down by the holding down clips, and open the raising valve, when any escape will become apparent. The same test applies to the air plug in the top of the cylinder, which before firing should be screwed home, and be airtight. Without these precautions an escape of air at the top of the cylinder during firing is likely to be missed, and the pressure be lost unawares.

Lowering pump.

604. The lowering pump has a gland at each end, and a piston with packing. To pack the piston, the parallel link must be disconnected, and the upper guide bracket of pump rod removed. To renew the lead washer of the upper gland, the upper end of the piston rod must be unscrewed; in doing this, the rod should be held by the hexagon and the upper end turned, so that the piston may not be turned in the pump cylinder.

Forms G 915 1

Pump packings.

605. The pump packings can be attended to without blowing the air out of the recoil cylinder, provided the gun is down on the buffers, as there is then no pressure in the pump, the weight of the gun being taken by the buffers, and not by the recoil ram. In the 9·2-inch and 10-inch, where stop-cocks are fitted, these should be closed, and the pump removed if necessary, even if the gun be not down on the buffers. To make sure that the pressure is removed from the ram, open the air plug at the top of the cylinder. The pressure from the air chambers of the recoil cylinder tends to shut the delivery valves of the pump, so that pressure should not pass to the pump, except as with the ram gland, but the fact that these valves themselves may leak should not be lost sight of. Any leak from the pump or its connecting pipes should carry liquid with it.

Forms G 915 1

General Directions.

Care and preservation.

606. Constant attention should be paid to the care and preservation of these mountings, and officers having such in their charge should make themselves conversant with the mechanism and various details of the mountings.

Mountings worked weekly.

607. The gun is to be raised to firing position and pumped down again each week.

Cleanliness of cylinder, &c., essential.

608. The mounting should be kept thoroughly clean and carefully examined each week. It is most important that grit and dust should be prevented from entering the

Digitized by Google

cylinder. After pumping the gun down for the last time at drill or at weekly inspection, and after the last round of practice, a well-oiled twist of tow should be bound tightly round the ram close to the bouche of the cylinder, and left there till the next working, when it should be carefully removed with the dust adhering to it. Any grit or dust found on the ram during the firing should be at once removed.

Forms G 915 1

609. The efficiency of the mounting depends to a large extent on preserving the packings in good order. The cylinder should therefore be kept filled with the proper charge of liquid, and under the full working pressure laid down in paragraph 570, and the gun slightly raised so that the weight is taken by the ram and not by the buffers. Preservation of leathers.

610. Leakage of pressure is to be noted, and additional pressure pumped in, if required, at each weekly working. If the leakage exceeds 50 lb. during the week, the cause must be discovered and be remedied. Leakage of pressure.

57 Chatham 3202

611. The cylinders will be emptied and cleaned out every 12 months, and the amount of dirt or rust should be noted. The liquid may then be filtered and used again. Cylinders cleaned out.

612. All spare leathers should be kept in store and rubbed occasionally with dubbing to prevent their becoming hard and brittle. The supply of spare leathers should never be allowed to run low. Spare leathers.

Forms G 915 1

613. Lead washers will be made locally, for which strip lead is supplied. Lead washers.

614. To keep the traversing gear in working order, the most important point is to see that the lower roller path is kept perfectly clear of dirt and fragments If it has been well cleaned when first erected, there is very little chance of anything falling on it after it is closed in, if ordinary care is taken whenever the foot plates are removed. Lower roller path.

71 1 5491

614A. The joints of the footplates, on 6-inch mountings, will be made with putty to prevent water leaking through and rusting the racers. The quantity of putty per mounting for one application, allowed for this service, is 10 lbs. The putty will be renewed every six months. Joints of footplates of 6-inch mountings.

615. The axles of the rollers and the bearings of the shafts of the rest of the gear will require periodical cleaning and lubricating, in the manner laid down in Army Form G 915. Roller axles and shaft bearings.

616. The traversing and elevating gears are to be taken to pieces every six months by the armament artificers. Traversing and elevating gear.

617. The elevating gear should be tried to see that the equalising friction brake is working properly, which it will not do if oil gets on the drum. The friction cones or plates should be slightly oiled to prevent scoring. The gun trunnion bearings should be well oiled. Friction brake.

Digitized by Google

Bright parts.

618. The parts left bright at issue should be kept greased and not painted.

Position of lead and leather washers forming joints.

Forms G 915 1

619. The position of the lead and leather washers forming joints are :—

		Lead.	Leather.
Gland, raising valve		1	—
Plug, air		1	—
„ air chamber	each	1	—
„ centre 9·2-inch		1	—
Cover, recoil valves	each	1	—
Seating „ „	„	1	—
Stop-cock pump, lowering 9·2-inch and 10-inch		2	—
Valves, filling		—	1
„ draw off		1	—
Lowering pumps		5	—
„ connecting pipes	each	2	—

Position and size of packing.

620. The positions of hemp "hydraulic" packing and their sizes are :—

Lowering pump	2	size 3-inch square
Raising valve	1	„ „ „
Ram gland, 6-inch	1	„ „ „
„ 9·2 and 10-inch	1	„ „ „

Contact with liquid.

621. All of these washers and packings are in contact with liquid.

Metal joints holding pressure.

622. Metal joints required to hold pressure occur at :—(1) The water level cock. (2) The raising valve. (3) The recoil valves. (4) The filling cock. (5) Lowering pump valves. (6) Valve, draw-off. (7) Stop-cock to lowering pump 9·2-inch and 10-inch.

3. "Pump, Air, Double, Carriage, Garrison, Disappearing."*

623. The pump is intended to charge the recoil cylinders of disappearing garrison mountings with fluid and compressed air. For spare parts of pump, *see* page 676.

4. Reservoir and Separator.*

624. The reservoir is for keeping in reserve a supply of compressed air for recharging the cylinders of disappearing mountings.

5. "Indicator, Pressure Spring, Carriages, Garrison Disappearing."*

625. This indicator shows the air pressure per square inch in the recoil cylinders of disappearing mountings

6. "Gauge, Pressure, Dead Weight, Testing."*

626. This is used to test the accuracy of the indicator records.

* For instructions for use, &c., see handbooks for the guns with which they are used.

Digitized by Google

XVIII.—TURNTABLES FOR HEAVY GUNS, AND MACHINERY FOR MOUNTING AND WORKING HEAVY GUNS IN SEA FORTS.*

1. Turntables.

Special type of casemate.

627. In certain positions where it has been found necessary to give to heavy guns, protected by armour, an extended range of lateral fire, a special type of casemate has been provided.

Construction of casemate.

628. These casemates have curved armoured fronts with two gun ports in each, and the gun is mounted, on the service carriage and slide, on a large turntable, which is so constructed as to admit of the gun being trained through an arc of 60° at each port.

38407 Equipment. 1530

In charge of O.C.R.A.

629. The turntables will be in charge of the officer commanding Royal Artillery, who will have possession of detailed drawings of the same, and will be responsible that they are kept in good condition, and in thorough working order.

2. 50-ton hoisting gear for landing heavy guns at sea forts.

Description of 50-ton hoisting gear.

630. This gear consists of a pair of cantilever girders, a traveller and a hoisting crab. The girders, which are 42 feet 4 inches long, are placed parallel about 4 feet 5 inches apart, and project 25 feet beyond the face of the work. The outer ends are connected by a cross beam, and the inner ends are secured by long holding down bolts to girders embedded in the masonry. Rails are fitted on the top of the girders for a traveller which carries two pairs of pulleys for the hoisting chains, and is moved along the rails by means of an endless racking chain. The hoisting chains are two in number, and consist of a series of steel plates connected by steel pins. The front ends are secured to the cross beam by a compensating lever which equalises the strain on both. They pass over the pulleys of the traveller and then round sprocket wheels in the crab, and the loose ends drop down hawse pipes into a well in the masonry. The chains hang in bights between the pulleys of the traveller and support a pair of pulleys attached to a crane hook by which the gun is slung. By this arrangement the gun may be run in and out without altering its level.

The hoisting crab is fixed on the roof at the rear of the cantilevers. It consists of a combination of gearing and sprocket wheels, which is worked from a capstan turned by manual labour.

* For machinery connected with 17·72-inch and 16-inch R.M.L. guns, directions are embodied in the Handbook for those guns.

Digitized by Google

The capstan is manned by 40 men ; the diameter over the arms (of which there are 10) being 26 feet. The capstan head can be thrown in gear by suitable clutches either with the sprocket wheels over which the hoisting chains pass, or with another wheel which drives the racking chain.

Provision against accident to the gear is made by the use of controlling gear, which consists of a worm wheel keyed on the main shaft and geared into an endless screw which is turned by a hand wheel. To allow the hoisting machinery to move, this screw must be turned by an attendant. A similar arrangement is provided for the racking gear, and serves to hold the racking chain, when not in gear with the capstan, thus preventing any motion of the traveller.

3. 45-ton hoisting gear for landing heavy guns at sea forts.

Description of 45-ton hoisting gear.

631. The general arrangement of this gear is similar to that of the 50-ton already described.

The cantilever girders are 48 feet 11 inches long, and project about 23 feet from the face of the work.

4. Hoisting gear for carriages, &c., up to 20 tons.

Description of 20-ton hoisting gear.

632. The cantilever girders of this gear are the same as those used for the 45-ton hoisting gear, but the hoisting crab is worked by winch handles instead of from a capstan.

A four-wheeled traveller runs along the rails, and is racked backwards and forwards by a short link chain which passes round a sprocket wheel on the crab, and is put in and out of gear by means of a clutch.

The traveller is fitted to take two service hoisting tackles of 6-inch rope and 18-inch blocks the falls of which are led to bollards on the crab.

5. Controlling gear at Portland Breakwater fort.

Description of controlling gear.

633. This gear, which is similar to the controlling arrangement in the heavy hoisting gear, consists of a steel drum with worm wheel attached, mounted in a cast-iron frame, which is bolted to the masonry at the entrance of the fort. The drum is provided with a flexible steel-wire hawser $6\frac{1}{2}$ inches in circumference.

6. Instructions for the care and preservation of the hoisting gears.

Care and preservation of gear.

634. The wheels, chains, and all working parts of the above gears must be coated with Field's grease to prevent rust.

When mounted the gear must be worked at least once a month, so that the bearings can be thoroughly lubricated (with Rangoon oil) and the hoisting chains well oiled through holes in the plates made for the purpose.

Digitized by Google

Particular attention must be paid to this last operation, otherwise the pins may rust in the plates, and render the chains unfit for work.

The capstan bars of the heavy gears and the tackle and winch handles of the 20-ton gear, must be placed in store when not required for use.

Examinations of the gear should be made every six months, for purposes of cleaning, painting, and repair (if necessary) so that the whole may be preserved in good condition.

The gears will be in charge of the officer commanding Royal Artillery, who will have possession of detailed drawings of the same, and will be responsible that the foregoing instructions are properly carried out.

7. Arrangement for lifting 43-ton guns from the lower to the upper tiers of the Spithead forts.

Description of 43-ton gun lifting arrangement.

635. This apparatus consists of a main lifting screw 13 feet 6 inches long, a pair of upper links 8 feet 9 inches long, two pairs of lower links 5 feet 8 inches long, two trunnion shackles, four connecting pins, and two spherical nuts. All these articles are of steel.

The shackles are placed on the trunnions and attached to the lower links, which are brought together over the gun, and connected by the upper links to the main screws.

The screw passes through the roof of the work, and is suspended by the spherical nuts from two steel cross heads, the lower of which bears on a strong timber framing fixed on the top of the fort, and the upper upon two 30-ton hydraulic jacks.

A pair of iron girders, 28 feet 6 inches long, are supported on a level with the upper tier, by four iron pillars. Steel rails are fitted on the top of the girders, on which a trolley runs for carrying the gun.

The trolley consists of a steel casting, 5 feet 10 inches long, 8 feet 10 inches wide, and 12 inches deep, fitted with four steel rollers, 1 foot 8 inches diameter and 8·75 inches wide. The trucks run on 4-inch steel axles, and are grooved to suit the rails.

When the gun is lifted the requisite height, the trolley is run under it, and both can then be moved by ordinary tackle.

This apparatus is sufficiently strong to lift a weight of 50 tons.

8. Instructions for the care and preservation of the Lifting Arrangement.

Care and preservation of gear.

636. This apparatus, when not in use, must be placed in Store, and all bright parts well coated with Field's grease.

The hydraulic jacks must be pumped up in the "Frame, store, hydraulic jack" to keep them in working order.

Digitized by Google

When the apparatus is required for use, all superfluous grease must be removed, but the nuts and screw must be well lubricated with Rangoon oil, and the hydraulic jacks tested before lifting the gun.

The lifting arrangement will be in charge of the senior ordnance store officer, Portsmouth, who will have possession of detailed drawings of the same, and who will be responsible that the foregoing instructions are properly carried out. 57 Ports. 2202

XIX.—ROPE MANTLETS.

Necessity for soaking in chloride of calcium.

637. As mantlets are liable to take fire by the flash of discharge of the gun, or by sparks being drawn in during recoil, it becomes necessary (not only to prevent injury to the mantlet itself, but also to guard against the more serious danger of ammunition being ignited by a smouldering fire) to apply to them a saturated solution of chloride of calcium for the purpose of rendering them fireproof.

Mode of application of chloride of calcium.

638. Mantlets which can be readily removed from their supports may be soaked in a shallow trough, but those which are fixtures must be brushed over. In either case the mantlet should be perfectly dry before the treatment. Care should be taken to lead off the salt drip that may come away from the wetted mantlet.

Frequency of application.

639. The time during which one wetting will remain effective will of course depend mainly on the state of the weather and the amount of exposure to which the mantlet is subjected. The condition of the rope-work may be readily ascertained by applying a light to its loose fibres, or by applying the tongue and noticing whether the salt can be tasted.

Chloride of calcium only to be applied in certain cases during peace.

640. As the chloride of calcium makes the rope-work somewhat unpleasant for handling, is destructive to clothing, and also promotes rust in ironwork, it should be applied in peace time only to the mantlets of those guns which are liable to fire more than one round during a practice, and even in their case only to the parts which are immediately exposed to the flash of discharge. In war time, however, all rope mantlet-work must be kept thoroughly damp with the solution.

Cases not to be opened till necessary.

641. The cases containing the chloride of calcium should not be opened until necessary, and when opened, but not emptied, should be again closed as completely as possible from the air and kept in a dry place.

Mantlet bars to be kept clean, &c.

642. The mantlet bars will be kept perfectly clean and smooth and free from rust, and before using any mantlet, even for ordinary exercise, grease will be freely laid on the bars wherever the moving thimbles pass (Field's grease* is allowed for this purpose, under paragraph 229).

* Price's composite grease will be used at all stations abroad except Halifax and St. Lucia.

Digitized by Google

643. The mantlets will be worked backwards and forwards at least once a week, to see that they move freely. Mantlets to be worked.

644. On no account should rope mantlets be placed in a store, or otherwise stacked, in a wet condition. Care should be taken when conveying mantlets to or from a work by boat or other means, that they are kept dry, and no more should be moved at a time than could be dried on arrival at their destination, should any get wet through accident. Calm dry days should be selected for moving mantlets. Mantlets to be kept dry

57
Ceylon
718

645. The foregoing instructions, except those contained in paragraph 642 and 643, will generally apply to the rope mantlet doors referred to in paragraph 99.

XX.—HYDRAULIC LIFTING JACK, TANGYE'S PATTERN.

1. Care of the Jack.

38407
Equip
1530

646. Hydraulic jacks will be filled* with a fluid composed of the ingredients, and in the proportions shown in paragraph 460. Fluid for filling jacks.

647. In filling the jack, the fluid will be poured through the filter supplied for the purpose. Filter to be used.

648. The jack, when once filled, will be kept constantly so, whether in use or in store: it will, however, be emptied and washed out once every twelve months, and filled as above directed; the liquid taken out of the jack will then be filtered and used again if not too thick. Always to be filled.

71
1
5332

649. A moderate pressure must be constantly maintained on the leather packings of hydraulic jacks, to preserve them in good condition and prevent leakage. With this object jacks in store must be pumped up in the "Frame, store, hydraulic jack," sufficiently to maintain a moderate pressure on the packings, special blocks being supplied for the rear roller jacks of 35 and 38-ton carriages. These jacks must be lashed to the frame to prevent their falling in the event of the pressure going off (*see* also paragraph 515). Pressure kept up.

71
1
5332

650. When a rear roller jack is in use as part of the carriage, the latter must be run back until it is in contact with the rear stops, and secured in that position by skidding placed between the front of the platform and the front transom of the carriage. The jack must then be pumped up sufficiently to throw the carriage on its rollers, and pumped up from time to time to keep the carriage in that position. Care of rear roller jacks.

2. Preparation for Transport.

651. The lowering screw-plug is loosened to allow of the lowering of the cylinder over the ram, by which Preparation for transport.

* The capacities of the several jacks are: Rear roller, 7½ ton, 4 pints Tangye's, 22½ ton, 3½ pints; 15 ton, 3½ pints; 7½ ton, 2 pints.

Digitized by Google

means the fluid is collected in the reservoir; the air screw-plug is then tightly screwed by means of a screw-driver on the end of the tommy, and the jack is ready for transport.

3. Instructions to be Observed in Raising or Lowering a Load.

Action of jack.

652. The air screw-plug is loosened to allow of the entrance of air, and the lowering screw-plug is tightened; the lever is shipped and worked up and down, its action on the pump being as follows:—The lever acts upon the crank, through the spindle, and by its means raises and lowers the plunger; in the up-stroke a vacuum is created in the pump, and the pressure of the air on the fluid in the reservoir forces it through the inlet valve; at the down stroke the inlet valve closes and the outlet one opens, and allows of the fluid being forced past it on the top of the ram, thus raising the cylinder, and with it the load on the cap.

To lower.

653. To lower, the screw-plug is loosened, which allows the fluid in the cylinder to pass through the passage to the reservoir.

To "lower" in the latest patterns.

654. Jacks of the latest pattern have the lowering valve placed at the bottom of the pump. To "lower," the lever must be drawn partially off the spindle, when it can be forced down as far as possible past the stop on the side of the jack, to allow the fluid under the ram to pass back to the cistern.

4. Mode of Taking Out the Pump.

Taking out the pump.

655. Unscrew the cap, empty the fluid out of the reservoir, loosen the crank set-screw, take out the packing gland and leather, the spindle, crank, and plunger. With the spanner (which fits the top of pump) unscrew the pump and remove it. Use the forked end of the spanner to unscrew the pump screw-plug, for getting at the outlet valve, when the spring and valve can be taken out.

5. Parts Liable to Get out of Order.

Parts liable to get out of order.

656. The parts most likely to get out of order are the leather packings; those of the air screw-plug, crank spindle, lowering screw-plug, and ram would cause the jack to leak externally; any disorder in them can easily be detected, and the packing replaced with new; those of the plunger and outlet valve would injure the lifting power, and would necessitate the taking to pieces of the jack and its careful examination.

Leather packing.

657. To get at the leather packing of the ram release the feather, which will allow of the removal of the ram.

Ram.

658. By standing unused a long time the ram is liable, from rusting, to set fast in the cylinder; to prevent this and other defects the jack should be examined and worked at regular intervals.

Digitized by Google

659. The gauze wire covering placed over the inlet valve is to prevent the ingress of dirt; this valve, having a metallic seating, is little liable to derangement. Gauze wire.

XXI.—HYDRAULIC LIFTING JACK, G.S. PATTERN.

1. Care of the Jack.

39407 Equip. 1530

660. Hydraulic jacks will be filled* with a fluid composed of the ingredients, and in the proportions shown in paragraph 460. Fluid for filling jacks.

661. Having the ram quite down, the fluid will be poured in through the hole for the air screw-plug, until the reservoir is full, and the air screw-plug replaced. To fill the jack.

662. In filling the jack the fluid will be poured through the filter supplied for the purpose. Filter to be used.

663. The jack, when once filled, will be kept so whether in use or in store; it will, however, be emptied and washed out once every twelve months, and filled as above directed; the liquid taken out of the jack will then be filtered and used again if not too thick. Always kept filled.

71 1 5332

664. If not in actual use the jack will be "pumped up" in the "Frame, store, hydraulic jack," to keep the packings in good order (*see* paragraph 515). To be "pumped up" in store.

2. Preparation for Transport.

665. Should the jack not be in the owest position the lever is put in the socket with the shoulder upwards, and pressed down to its fullest extent, by which means the fluid is collected in the reservoir; the air screw-plug is then tightly screwed down by a screwdriver on the end of the lever. Preparation for transport.

3. Instructions to be Observed in Raising or Lowering a Load.

666. The air screw-plug is loosened to allow of the entrance of air, the lever is shipped with the shoulder downwards, and worked up and down, its action on the pump being as follows:—The lever acts upon the crank through the spindle, and by its means raises and lowers the plunger; in the up-stroke a vacuum is created in the pump, and the pressure of the air on the fluid in the reservoir forces it through the inlet valve; at the down-stroke the inlet valve closes, and the outlet one opens and allows of the fluid being forced past it on to the bottom of the ram, thus raising the cylinder, and with it the load. To "raise" the load

667. To "lower," the lever is shipped in the socket with the shoulder upwards, and then pressed downwards to its full extent, this allows the fluid in the cylinder to pass through the passages to the reservoir. To "lower" the load

* The capacities of the G.S. jacks are: 30 tons, 6 pints; 20 tons, 4½ pints; 10 tons, 2½ pints.

Digitized by Google

4. Parts Liable to Get out of Order.

Parts liable to get out of order.

668. The parts most likely to get out of order are the leather packings. Any disarrangement of those of the air screw-plug, crank spindle, ram, and cup leather at the base of the main cylinder, would cause the jack to leak internally: any disorder in them can easily be detected, and the packing replaced with new. Defects in the packing of the plunger would injure the lifting power, and would necessitate the taking to pieces of the jack, and its careful examination.

To remove leather packings.

669. To get at the leather packing of the ram, or at the outlet valve, unscrew the base of the jack, remove the cup leather in the base of the cylinder and unscrew the packing ring from the end of the pump, when the leather can be removed. To get at the leather packing of the plunger or at the inlet valve, empty the reservoir and unscrew it, the inlet valve can then be removed by unscrewing the cap on the end of the plunger.

5. Precautions to be Observed in Working the Jacks.

Precautions to be observed in working the jack.

670. These jacks may be used standing, or at an angle, only the head should be a little higher than the base. They should not be lowered fast or suddenly checked with a heavy load.

To miss a stroke.

671. Sometimes it happens that a full stroke of the lever would raise the load too high, then raise the lever a little and push it down slowly, by which means a stroke will be missed.

To clear the inlet valve.

672. In the case of the inlet valve sticking on its seat, strike the lever a few sharp blows up and down with a piece of wood, and this will jar the valve and remove the difficulty.

XXII.—PROJECTILES.

1. Scraping and Examining Projectiles.

Shot runs and trestles.

673. Shot runs and trestles are to be supplied to all working parties employed in cleaning shell or shot. If shot runs are not obtainable, suitable materials, such as strong wooden planks, &c, will be supplied in order that the work may be properly carried on.

Examining interior.

674. The shell or shot will be placed on the run and the plugs or corks removed from the shells, and the interior examined by the eye in the first place to ascertain if they contain any powder, and also searched with a copper scraper, or in the case of Shrapnel shells, with a copper wire; shells containing powder will be at once carefully removed and dealt with under the instructions for the examinations of filled shells.

Rifled Shrapnel.

675. Rifled Shrapnel shells, before painting, will be examined to see if the fuze socket is secure; in the earlier

Digitized by Google

patterns of shells it has sometimes become loose, allowing the resin to work through into the socket; also at the junction of the head and body, to see that the head is secure. Any shell found defective will be put on one side for the decision of the commanding officer.

Lead-coated projectiles.

676. Lead-coated projectiles will be carefully examined as to the attachment of the lead coating; in very bad cases the eye will detect a loose coat and in doubtful cases tapping with a hammer will detect a loose place, as a peculiar dull sound is given out. If blisters appear on the surface they should be pricked, and the lead hammered down. The high ring gauge should be passed over the projectiles and the lead, if set up, can be filed down. Any doubtful cases will be set aside for the decision of the commanding officer.

Moorsom fuze-hole.

677. Any shell having the obsolete Moorsom gauge fuze-hole (which can be readily known by the large plug with a shoulder and cylindrical body) will be put on one side for conversion to G.S. gauge.

Scraping the exterior.

678. The shell or shot will be scraped with the swords provided for the purpose until quite free from paint or rust, care being taken not to injure the studs of the R.M.L. projectiles, or the lead coating of the R.B.L. projectiles.

Interior.

679. The interiors of smooth-bore common shells will be scraped with a copper scraper and freed from rust; the interior of rifled shells being lacquered, they will not be scraped, but simply inverted to ensure their being free from water, and to shake out any loose dirt, &c.

Leather collars.

680. The leather collars on the fuze-hole plugs will be examined, and if necessary replaced by new ones.

Rivet holes.

681. The rivet holes for the bottoms of spherical shells will be examined, and if necessary cleaned out and re-waxed.

Fuze-holes.

682. The fuze-holes of all rifled shells, and the loading-holes of diaphragm Shrapnel shells, will be thoroughly cleaned; the fuze-hole plugs and loading-hole plugs for diaphragm Shrapnel shells, also metal fuzes of filled shells and adapters of empty shells will be smeared with the lubricant detailed for that purpose in the Table at page 50, and then screwed home into the shells.

73
12
4803

The mixture is to be applied to the threads of the fuze, plug, or adapter with a brush, in sufficient quantity to cover them, care being taken that it does not extend over the bottom (*see* paragraph 458, Magazine Regulations, 1894). The adapters of filled shells are to be coated with red lead.

57
Dover
2539

683. At each annual inspection, all G.S. and R.B.L. field service plugs and metal fuzes of filled shells, and adapters of empty shells, will be removed, relubricated,

Digitized by Google

as in paragraph 682, and then screwed tightly home. The plugs and recesses will then be well painted with the same colour as the tip of the shell. Shells which are stored on their bases will not be removed for this operation. (For quantity of paint and time and working pay for this service, see Table L, page 184.)

Fractured Palliser projectiles.

684. Model "B," designed to illustrate the extent of the fracture of Palliser projectiles, will be issued by the ordnance store department, for the guidance of inspectors of warlike stores in the examination of Palliser projectiles. Any Palliser projectiles that may be found with their points broken to a greater extent than is shown in model "B" will only be used for practice, and will be retained at stations for that purpose, if so required. If not required they will be sent to the Royal Arsenal, Woolwich. Projectiles with their points broken similarly to, or to a less extent than is shown in model "B," will be considered serviceable.

2. Painting and Piling Projectiles.*

Two coats of paint to be given.

686. The shell or shot will be painted with two coats of paint, the second coat will not be given until the first coat has thoroughly set. The red rings, red tips, white tips, or white rings on shell should be painted with one coat only; the blue tips of segment and ring shell, however, require two coats. Tarpaulins will be supplied for placing over the projectiles after they have received the first coat.

57
Gen. No.
5114
63
Gibraltar
1137

Portions to be painted.

687. The paint will be applied over the whole of the exterior iron surface, including the portion inside the fuze-hole as far as the metal bouche; the upper surface and key-hole of the metal plug, and the projecting socket in those shells which have it, will also be painted. In the case of lead-coated projectiles the painting should extend at least half an inch over the junction of the iron and lead both at the base and shoulder. Projectiles fitted with gas-checks will have their gas-checks removed before being painted.

Gauging.

688. Previous, and subsequent, to painting, the whole of the projectiles will be gauged with the proper gauges by the non-commissioned officer in charge of the party, and all that do not gauge properly will be put to one side, and the circumstances reported to the commanding officer.

Time and workingpay, and quantity of paint.

689. The time and working pay allowed for scraping, cleaning, and painting, together with the quantity of paint required, is given in Table K, pages 181 to 183. The quantity of paint for marking is given in Part 1, page 141.

* See also Regulations for Magazines, Ammunition Stores, Laboratories, &c., 1894.

Digitized by Google

Filled shells to be repainted where necessary.

690. Filled shells should not require repainting after being placed in the shell store, but if, from any cause, they are found in such a state that repainting appears necessary, a report will be made to the general officer commanding at the station, who will give the necessary authority for the shells to be repainted under the officer of the staff for the inspection of warlike stores, or other qualified officer.

Shells to be examined before filling.

691. All shells to be filled will be examined, and, if not in a proper condition as regards painting, will be painted before being filled and placed in store.

Paint for marking.

692. If the date, or the red bands denoting filled, &c., should become illegible or peel off, they may be renewed without emptying the shell.

Shells sentenced for practice.

693. Projectiles sentenced for practice only will have all marks obliterated with black paint, except the red ring denoting "filled," the white rings denoting steel and armour piercing, the blue tip denoting segment or ring, and the red tip for Shrapnel. They will then be painted round the centre of the body with a yellow band $\frac{1}{2}$-inch wide.

63 Gibraltar 1137

Mode of piling projectiles.

694. The bases of all piles should be firm and level, and formed of stone, concrete, or other hard material. Projectiles should never be piled on wood, sand, mud, or loose shingle, even when garlands are used. Unserviceable shell or shot form an excellent base, and iron rails with turned up ends are sometimes used for piling elongated projectiles. When neither of these means are available, medium wood scotches will be allowed for scotching up the ends of piles of elongated projectiles. Spherical shells will be piled with their fuze-holes downwards. Projectiles for rifled ordnance should be piled on their sides, special care being taken not to injure the lead-coating, studs, gas-checks, or driving bands. In the case of B.L., Q.F. 4·7-inch and upwards, and R.M.L. studded projectiles, boards about $\frac{3}{4}$-inch or $\frac{5}{8}$-inch thick should be placed for the bottom layer to rest upon. Rifled Shrapnel shells will on no account be placed on their bases when stored in the open air, as it is impossible to dry these shells thoroughly when water has once entered them. For the storage of filled shells, *see* Regulations for Magazines, Ammunition Stores, &c., 1894, Section XII, paragraphs 499 to 502.

57 Beverley 84

Care must be taken not to burr the studs of projectiles when stacking. Studded projectiles should never be rolled on the ground or on stone floors; the planks supplied for this purpose will invariably be used.

63 Gibraltar 1137

695. For the various paints used for painting shells, and their ingredients, *see* Regulations for Magazines, Ammunition Stores, Laboratories, &c., 1894, paragraph 480.

Digitized by Google

XXIII.—WINCHES AND CHAINS FITTED IN SHELL LIFTS.

1. Testing.

Shell-lifting apparatus to be tested annually.

696. It being desirable that all winches and chains fitted in shell lifts in forts and batteries should be periodically subjected to a working trial, officers commanding Royal Artillery districts will arrange that every shell-lifting apparatus in their districts be tested annually with a weight equal to 1½ times the greatest weight the apparatus will have to lift under service conditions.

Member of R.E. to be present.

697. The trials should be conducted in the presence of a member of the Royal Engineer department, who will inspect the apparatus before and after trial, and note and signs of weakness which may have been disclosed.

2. Preservation.

Parts not painted to be oiled.

698. All those parts of the apparatus which are not painted should be oiled at least once every year to preserve them from rust.

Digitized by Google

Digitized by Google

XXIV.—TABLES OF TOOLS, TIME, WORKING PAY, AND

TABLE A.—List of Tools required for the Cleaning, Examination,

Tools.	Nature. B.L. 18·5-inch	12-inch.	10-inch.	9·2-inch.	8-inch.	6-inch.	5-inch.	4-inch.	20-pr.	12-pr.	R.B.L. 7-inch.	40-pr.	40-pr. side closing	20-pr.	12- and 9-pr.	R.M.L. 17·72-inch.	16-inch.	12·5-inch.
Woolwich Store Charge, No. 2.																		
Stoves, Soyer's	*a*	*a*	*a*	*a*	*a*	...	...	...	...	...	...	...	...	...	...	*a*	*a*	*a*
Woolwich Store Charge, No. 7.																		
Compasses, wing, 10-inch	*a*	*a*	*a*	*a*	*a*	*a*	*a*	...	*a*	*a*	*a*	*a*	*a*	*a*	*a*	*a*	*a*	*a*
Woolwich Store Charge, No. 8.																		
Knives, putty	...	...	...	...	...	...	...	...	...	...	...	...	...	...	...	...	...	...
Straight-edges, steel	*a*	*a*	*a*	*a*	*a*	*a*	*a*	*a*	*a*	*a*	*a*	*a*	*a*	*a*	*a*	*a*	*a*	*a*
Woolwich Store Charge, No. 10.																		
Braces, smiths	...	...	...	...	...	...	...	...	...	...	...	...	*a*	...	...	*a*	*a*	*a*
,, ,, Rimers, vent { long ...	...	...	...	...	...	...	...	...	...	...	...	...	...	...	...	*a*	*a*	*a*
,, ,, Rimers, vent { short ...	...	...	...	...	...	...	...	...	...	...	...	...	*a*	...	...	...	...	...
Brushes, gun, soft, small	...	...	...	...	...	...	...	...	...	...	...	...	...	...	...	...	...	...
Gauges, vent { 24-inch ... ... sets	*a*	*a*	*a*	*a*	...	*a*	...	...	...	...	...	...	...	...	...	*a*	*a*	*a*
Gauges, vent { 15-inch	...	...	...	...	...	...	*a*	...	...	...	...	...	*a*	...	...	...	...	...
Gauges, vent { 4-inch	...	...	...	...	...	...	...	...	*a*	*a*	...	...	...	...	...	...	...	...
Holders, brush { No. 1	...	...	...	...	...	...	...	...	...	...	...	...	...	...	...	...	...	...
Holders, brush { No. 2	...	...	*a*	*a*	*a*	*a*	*a*	...	...	...	*a*	*a*	*a*	...	...	...	...	...
Holders, brush { No. 3	*a*	*a*	...	...	...	...	...	...	...	...	...	...	...	...	...	...	...	*a*
Holders, brush { No. 4	...	...	...	...	...	...	...	...	*a*	*a*	...	...	...	*a*	*a*	...	..	..
Holders, brush { No. 5	...	...	...	...	...	...	...	...	...	...	...	...	...	...	...	...	*a*	...
Lamps, examining bore { large ...	*a*	*a*	*a*	*a*	*a*	*a*	*a*	...	...	...	*a*	...	...	...	...	*a*	*a*	*a*
Lamps, examining bore { small ...	..	...	...	...	...	...	...	...	*a*	*a*	...	*a*	*a*	*a*	*a*	...	...	...
Scrapers, ordnance { exterior ...	*a*	*a*	*a*	*a*	*a*	*a*	*a*	*a*	*a*	*a*	*a*	*a*	*a*	*a*	*a*	*a*	*a*	*a*
Scrapers, ordnance { vent, half round ...	...	...	...	...	...	...	...	...	...	...	...	...	*a*	...	...	...	...	*a*
Searchers { chisel-ended	...	...	...	...	...	...	...	...	.	*a*	*a*	*a*	*a*	*a*	*a*	...	...	...
Searchers { pointed	...	*a*	*a*	*a*	*a*	*a*	*a*	*a*	*a*	*a*	...	...	...	...	...	*a*	*a*	*a*
Stoves, lamp	...	...	...	...	...	*a*	*a*	*a*	*a*	*a*	*a*	*a*	*a*	*a*	*a*	...	...	...

a Common.

Digitized by Google

MATERIALS FOR SCRAPING AND PAINTING ORDNANCE, &c.

Painting and Lacquering of the various natures of Rifled Ordnance.

Nature.																								Remarks.
R.M.L.																R.M.L. jointed.			Quick-firing.				
12-inch.	11-inch.	10·4-inch.	10-inch.	9-inch.	8-in. howitzer.	7-inch.	6·6-inch and howitzer.	80-pr., and 64-pr. 71 and 58 cwt.	6·3-in. howitzer and 64-pr. 64 cwt.	40-pr.	25-pr.	16-pr.	13-pr.	9-pr.	7-pr.	4-in. howitzer.	15-pr.	2·5-inch.	4·7-inch.	12-pr.	6-pr.	3-pr.		
a	*a*	*a*	*a*	*a*	...	...	...	...	...	...	...	...	...	...	...	...	...	...	...	...	...	...		
a	*a*	*a*	*a*	*a*	*a*	*a*	*a*	*a*	*a*	*a*	*a*	*a*	*a*	*a*	*a*	...	...	...	...	*a*	...	...		
...	...	...	...	...	...	...	...	...	...	...	...	...	...	...	...	...	...	...	...	...	...	...		1 per 10 or less wood carriage.
a	*a*	*a*	*a*	*a*	*a*	*a*	*a*	*a*	*a*	*a*	*a*	*a*	*a*	*a*	*a*	...	...	...	...	*a*	...	...		
a	*a*	*a*	*a*	*a*	*a*	*a*	*a*	*a*	*a*	*a*	*a*	*a*	*a*	*a*	*a*	...	...	...	...	...	...	...		
a	*a*	*a*	*a*	*a*	...	...	...	...	...	...	...	...	...	...	...	...	...	...	...	...	...	...		
...	...	...	...	...	*a*	*a*	*a*	*a*	*a*	*a*	*a*	*a*	*a*	*a*	*a*	...	...	...	...	1	...	...		
...	...	...	...	...	...	...	...	...	...	...	...	...	...	...	...	...	...	...	...	...	...	...		
a	*a*	*a*	*a*	*a*	*a*	*a*	...	...	...	...	...	...	*a*	...	...	...	...	...	...	...	...	...		
...	...	...	...	...	...	...	*a*	*a*	*a*	*a*	*a*	*a*	,,	*a*	*a*	...	...	...	...	...	...	...		
...	...	...	...	...	...	...	...	...	...	...	...	...	...	...	...	...	...	...	...	...	...	...		
...	...	...	*a*	*a*	*a*	*a*	*a*	*a*	*a*	*a*	*a*	*a*	*a*	*a*	*a*	...	...	...	...	...	...	...		For end of bore.
...	...	...	*a*	*a*	*a*	*a*	*a*	*a*	*a*	*a*	...	...	...	...	...	...	...	...	...	...	...	...		
a	*a*	*a*	...	...	...	...	...	...	...	...	...	...	...	...	...	...	...	...	...	...	...	...		
...	...	...	...	...	...	...	...	...	...	...	*a*	*a*	*a*	*a*	*a*	...	...	...	...	*a*	...	...		
...	...	...	...	...	...	...	...	...	...	...	...	...	...	...	...	...	...	...	...	...	...	...		
a	*a*	*a*	*a*	*a*	*a*	*a*	*a*	*a*	...	...	...	...	...	...	...	...	...	...	...	...	...	...		
...	...	...	...	...	...	...	...	...	...	*a*	*a*	*a*	*a*	*a*	*a*	...	...	...	...	*a*	...	...		
a	*a*	*a*	*a*	*a*	*a*	*a*	*a*	*a*	*a*	*a*	*a*	*a*	*a*	*a*	*a*	...	...	...	...	*a*	...	...		*Mark I gun only.
a	*a*	...	*a*	*a*	*a*	*a*	*a*	*a*	*a*	*a*	*a*	*a*	*a*	*a*	*a*	...	...	...	...	...	...	...		
...	...	...	...	...	...	...	...	...	...	...	...	...	...	...	...	...	...	...	...	...	...	...		
a	*a*	*a*	*a*	*a*	*a*	*a*	*a*	*a*	*a*	*a*	*a*	*a*	*a*	*a*	*a*	...	...	...	...	*a*	...	...		
...	...	...	...	...	*a*	*a*	*a*	*a*	*a*	*a*	*a*	*a*	*a*	*a*	*a*	...	...	...	...	*a*	...	...		

a Common.

Digitized by Google

TABLE A.—

TOOLS.	Nature.																		
	B.L.										R.B.L.					R.M.L.			
	13·5-inch.	12-inch.	10-inch.	9·2-inch.	8-inch.	6-inch.	5-inch.	4-inch.	20-pr.	12-pr.	7-inch.	40-pr.	40-pr. side closing.	20-pr.	12- and 9-pr.	17·72-inch.	16-inch.	12·5-inch.
Woolwich Store Charge, No. 17.																		
Bits, vent { 36-inch	*a*	*a*	*a*	*a*	...	...	...	...	...	...	...	...	...	...	...	*a*	*a*	**a*
20 inch	...	...	...	...	*a*	*a*	*a*	...	...	...	...	...	...	...	...	...	...	...
Rods, vent { 36-inch	*a*	*a*	*a*	*a*	...	...	...	...	...	...	...	...	...	...	...	*a*	*a*	*a*
20-inch	...	...	...	...	*a*	*a*	*a*	...	...	...	...	...	...	...	...	...	...	...
Woolwich Store Charge, No. 18.																		
Brushes, piasaba { B.L., bore	1	1	1	1	1	1	1	...	1	1	...	...	...	...	...	...	...	...
R.B.L.	...	...	...	...	...	...	...	...	...	...	1	*a*	*a*	1	1	...	...	...
R.M.L.	...	...	...	...	...	...	...	...	...	...	...	...	...	...	...	1	1	1
Woolwich Store Charge, No. 22.																		
Bits, vent, Armstrong	...	...	...	...	...	...	...	...	...	...	*a*	*a*	...	*a*	*a*	...	...	...
Woolwich Store Charge, No. 25.																		
Brushes, paint { ground, 000	...	...	...	...	...	...	...	...	...	...	...	...	...	...	...	...	...	...
unground, 000 ...	...	...	...	...	...	...	...	...	...	...	...	...	...	...	...	...	...	...
sash tool, No. 8 ...	...	...	...	...	...	...	...	...	...	...	...	...	...	...	...	...	...	...
Woolwich Store Charge, No. 29.																		
Instruments, taking impressions, bore { No. 1	...	...	...	...	...	*a*	...	...	...	...	*a*	...	...	...	...	...	...	*a*
No. 2	...	...	...	...	...	...	...	...	*a*	...	...	...	...	*a*	*a*	...	...	...
No. 3	...	...	...	...	...	...	*a*	*a*	...	...	...	*a*	*a*	...	...	...	...	...
No. 4	...	*a*	*a*	*a*	*a*	...	...	...	...	...	...	...	...	...	...	...	...	...
No. 5	...	...	...	...	...	...	...	...	...	...	...	...	...	...	...	...	...	...
No. 6	...	...	...	...	...	...	...	...	...	...	...	...	...	...	...	...	...	...
No. 7	1	...	...	...	...	...	...	...	...	...	...	...	...	...	...	...	...	...
No. 8	...	...	...	...	...	...	...	...	...	...	...	...	...	...	...	...	...	...
No. 9	...	...	...	...	...	...	...	...	...	...	...	...	...	...	...	*a*	*a*	...
Blocks, adjusting { No. 4 { bore	...	...	*a*	*a*	...	...	...	...	...	...	...	...	...	...	...	...	...	...
chamber ...	...	*a*	*a*	*a*	*a*	...	...	...	...	...	...	...	...	...	...	...	...	...
No. 7 { bore ...	1	...	...	...	...	...	...	...	...	...	...	...	...	...	...	...	...	...
chamber ...	1	...	...	...	...	...	...	...	...	...	...	...	...	...	...	...	...	...
No. 9 { bore ...	...	...	...	...	...	...	...	...	...	...	...	...	...	...	...	*a*	*a*	...
chamber ...	...	...	...	...	...	...	...	...	...	...	...	...	...	...	...	*a*	*a*	...
Clamps, special	...	...	...	...	...	...	...	...	...	...	...	...	...	...	...	*a*	*a*	...

a Common.

Digitized by Google

continued.

Nature.																												Remarks.
R.M.L.																			R.M.L. jointed.			Quick firing.						
12-inch.	11-inch.	10·4-inch.	10-inch.	9-inch.	8-in. howitzer.	7-inch.	6·6-inch and howitzer.	80-pr., and 64-pr. 71 and 58 cwt.	6·3-in. howitzer and 64-pr. 64 cwt.	40-pr.	25-pr.	16-pr.	13-pr.	9-pr.	7-pr.	4-in. howitzer.	15-pr.	2·5-inch.	4·7-inch.	12-pr.	6-pr.	3-pr.						
...	...	...	...	...	...	...	...	...	...	...	...	...	...	...	...	...	...	...	...	...	...	...						
...	...	*a*	...	...	...	...	...	...	...	...	...	...	...	...	...	...	...	...	...	...	...	...						*Mark II gun only.
...	...	*a*	...	...	...	...	...	...	...	...	...	...	...	...	...	...	...	...	...	...	...	...						
...	...	...	...	...	...	...	...	...	...	...	...	...	...	...	...	...	...	...	...	...	...	...						
*1	1	1	1	1	1	1	1	*a*	*a*	1	1	1	1	1	1	...	...	...	...	...	...	...						*1 for { 35-ton. / 25 „ } Gen. No. 57 / 4935
...	...	...	...	...	...	...	...	...	...	...	...	...	...	...	...	...	...	...	...	...	...	...						
...	...	...	...	...	...	...	...	...	...	...	...	...	...	...	...	...	...	...	...	...	...	...						Issued as required for painting or lacquering.
...	...	...	...	...	...	...	...	...	...	...	...	...	...	...	...	...	...	...	...	...	...	...						
...	...	...	...	...	...	...	...	...	...	...	...	...	...	...	...	...	...	...	...	...	...	...						
a	*a*	...	*a*	*a*	*a*	*a*	*a*	*a*	*a*	...	...	*a*	*a*	*a*	*a*	...	*a*	...	...	*a*	...	...						
...	...	...	...	...	...	...	...	...	...	*a*	*a*	...	...	...	...	*a*	...	...	*a*	...	...	...						
...	...	*a*	...	...	...	...	...	...	...	...	...	...	...	...	...	...	...	...	...	...	1	...						
...	...	...	...	...	...	...	...	...	...	...	...	...	...	...	...	...	...	1	...	...	...	1						
...	...	...	...	...	...	...	...	...	...	...	...	...	...	...	...	...	...	...	...	...	...	...						
...	...	*a*	...	...	...	...	...	...	...	...	...	...	...	...	...	...	...	...	...	...	...	...						
...	...	...	...	...	...	...	...	...	...	...	...	...	...	...	...	...	...	...	...	...	...	...						
...	...	...	...	...	...	...	...	...	...	...	...	...	...	...	...	...	...	...	...	...	...	...						
...	...	...	...	...	...	...	...	...	...	...	...	...	...	...	...	...	...	...	...	...	...	...						

a Common.

Digitized by Google

TABLE A.—

TOOLS.	Nature. B.L. 13·5 inch.	12-inch.	10-inch.	9·2-inch.	8-inch.	6-inch.	5-inch.	4-inch.	20-pr.	12-pr.	R.B.L. 7-inch.	40-pr.	40-pr. side closing.	20-pr.	12- and 9-pr.	R.M.L. 17·72-inch.	16-inch.	12·5-inch.
Woolwich Store Charge, No. 29—continued.																		
Instruments, taking impressions, bore—*continued.* — blocks, adjusting No. 7	‖1	...	...	...	...	...	...	...	...	...	...	...	...	...	...	...	...	...
Discs — guide — bore — No. 1	...	...	...	...	...	1	...	...	...	...	1	...	...	...	...	...	...	2
Discs — guide — bore — No. 4	...	...	2	2	2	2	...	...	...	...	...	...	...	...	...	...	...	...
Discs — guide — bore — No. 7	...	3	...	...	...	...	...	...	...	...	...	...	...	...	...	...	...	...
Discs — guide — bore — No. 9	...	...	...	...	...	...	...	...	...	...	...	...	...	...	...	2	2	...
Discs — chamber — No. 4	...	...	1	1	1	1	...	...	...	...	...	...	...	...	...	...	...	...
Discs — chamber — No. 7	...	‖1	...	...	...	...	...	...	...	...	...	...	...	...	...	...	...	...
Discs — chamber — No. 9	...	...	...	...	...	...	...	...	...	...	...	...	...	...	...	2	2	...
Discs — supporting, No. 7	...	‖1	...	...	...	...	...	...	...	...	...	...	...	...	...	...	...	...
Pieces, lengthening, No. 1, 4 feet	...	...	...	...	...	...	...	...	...	...	...	...	...	...	...	...	...	*a*
Plates, bore — No. 1	...	...	...	...	...	1	...	...	...	...	*1	...	...	...	...	...	...	1
Plates, bore — No. 2	...	...	...	...	...	...	...	...	*1	*1	...	...	...	*1	*1	...	...	...
Plates, bore — No. 3	...	...	...	...	...	...	1	1	...	...	*1	1	...	...	...	...	...	...
Plates, bore — No. 4	...	1	1	1	1	...	...	...	...	...	...	...	...	...	...	...	...	...
Plates, bore — No. 7	...	1	...	...	...	...	...	...	...	...	...	...	...	...	...	...	...	...
Plates, bore — No. 9	...	...	...	...	...	...	...	...	...	...	...	...	...	...	...	1	1	...
Plates, chamber — No. 1	...	...	...	...	...	†1	...	...	...	...	...	...	...	...	...	...	...	*1
Plates, chamber — No. 2	...	...	...	...	...	...	...	...	1	1	...	...	...	...	...	...	...	...
Plates, chamber — No. 3	...	...	...	...	...	...	1	1	...	...	...	...	...	...	...	...	...	...
Plates, chamber — No. 4	...	1	1	1	1	...	...	...	...	...	...	...	...	...	...	...	...	...
Plates, chamber — No. 7	1	...	...	...	...	...	...	...	...	...	...	...	...	...	...	...	...	...
Plates, chamber — No. 9	...	...	...	...	...	...	...	...	...	...	...	...	...	...	...	1	1	...
Wrenches, No. 9 — clamp	...	...	...	...	...	...	...	...	...	...	...	...	...	...	...	1	1	...
Wrenches, No. 9 — disc guide	...	...	...	...	...	...	...	...	...	...	...	...	...	...	...	1	1	...
Wrenches, No. 9 — feed spindle	...	...	...	...	...	...	...	...	...	...	...	...	...	...	...	1	1	...
Instruments, taking impressions, vents — No. 1	...	...	...	...	...	...	...	...	...	...	...	...	...	...	...	...	...	*a*
Instruments, taking impressions, vents — No. 2	...	...	...	...	...	...	...	...	...	...	...	...	...	...	...	...	...	...
Instruments, taking impressions, vents — Blocks, adjusting, No. 1, R.M.L.	...	...	...	...	...	...	...	...	...	...	...	...	...	...	...	...	...	1
Instruments, taking impressions, vents — Blocks, adjusting, No. 2, R.M.L.	...	...	...	...	...	...	...	...	...	...	...	...	...	...	...	...	...	...
Instruments, taking impressions, vents — Plates, No. 1, A	...	...	...	...	...	...	...	...	...	...	...	...	...	...	...	...	...	*a*
Instruments, taking impressions, vents — Plates, No. 1, B	...	...	...	...	...	...	...	...	...	...	...	...	...	...	...	...	...	...
Instruments, taking impressions, vents — Plates, No. 1, C	...	...	...	...	...	...	...	...	...	...	...	...	...	...	...	...	...	...
Micrometers, 24-inch*	*a*	*a*	*a*	*a*	*a*	*a*	...	...	...	...	...	...	...	...	...	...	...	...
Mirrors, examining guns	...	...	...	...	...	...	...	...	...	...	...	...	...	...	...	*a*	*a*	*a*

a Common.

‖ Stamped A. ‡ Stamped B. } Refer to 13·5-inch B.L. only.

Digitized by Google

continued.

Nature.																												Remarks.
R.M.L.																			R.M.L. jointed.			Quick firing.						
12-inch.	11-inch.	10·4-inch.	10-inch.	9-inch.	8-in. howitzer.	7-inch.	6·6-inch and howitzer.	80-pr., and 64-pr. 71 and 58 cwt.	6·3-in. howitzer and 64-pr. 64-cwt.	40-pr.	25-pr.	16-pr.	13-pr.	9-pr.	7-pr.	4-in. howitzer.	15-pr.	2·5-inch.	4·7-inch.	12-pr.	6-pr.	3-pr.						
...	...	...	...	...	...	...	...			...	...	...	...	...	...	...	...	...	...	...	...	...						
1	1	...	1	1	1	1	1		1	...	...	...	...	...	...	...	...	...	...	...	...	...						
...	...	†2	...	...	...	...	...	...	...	...	...	...	...	...	...	...	...	...	...	...	...	...						
...	...	...	...	...	...	...	...	...	...	...	...	...	...	...	...	...	...	...	...	...	...	...						
...	...	§1	...	...	...	...	...	...	...	...	...	...	...	...	...	...	...	...	...	...	...	...						
...	...	...	...	...	...	...	...	...	...	...	...	...	...	...	...	...	...	...	...	...	...	...						
...	...	...	...	...	...	...	...	...	...	...	...	...	...	...	...	...	...	...	...	...	...	...						
...	...	...	...	...	...	...	...	...	...	...	...	...	...	...	...	...	...	...	...	...	...	...						
*a	...	...	...	...	...	...	...	...	...	...	...	...	...	...	...	...	...	...	...	...	...	...	*35-ton gun only.					
1	1	...	1	1	1	*1	*1	1	*1	...	...	...	...	...	...	...	...	...	...	...	...	...	*One pattern.					
...	...	...	...	...	...	...	...	...	...	...	...	*1	*1	*1	*1	...	*1	...	...	*1	...	...	*One pattern.					
...	...	...	...	...	...	...	...	...	...	*1	*1	...	...	...	...	*1	...	...	1	...	...	...	*One pattern.					
...	...	1	...	...	...	...	...	...	...	...	...	...	...	...	...	...	...	...	...	...	...	...						
...	...	...	...	...	...	...	...	...	...	...	...	...	...	...	...	...	...	...	...	...	...	...						
...	...	...	...	...	...	...	...	...	...	...	...	...	...	...	...	...	...	...	...	...	...	...						
...	...	...	...	...	...	...	...	...	...	...	...	...	...	...	...	...	...	...	...	...	...	...						
																							*Mark II gun only.					
																							†Identical patterns for Marks IV and VI guns. Separate pattern for Mark V guns.					
...	...	...	...	...	...	...	...	...	...	...	...	...	...	...	...	...	...	...	...	1	...	...						
...	...	...	...	...	...	...	...	...	...	...	...	...	...	...	...	...	...	...	1	...	...	...						
...	...	1	...	...	...	...	...	...	...	...	...	...	...	...	...	...	...	...	...	...	...	...						
...	...	...	...	...	...	...	...	...	...	...	...	...	...	...	...	...	...	...	...	...	...	...						
...	...	...	...	...	...	...	...	...	...	...	...	...	...	...	...	...	...	...	...	...	...	...						
...	...	...	...	...	...	...	...	...	...	...	...	...	...	...	...	...	...	...	...	...	...	...						
...	...	...	...	...	...	...	...	...	...	...	...	...	...	...	...	...	...	...	...	...	...	...						
*a	*a	...	*a	a	...	a	...	a	†a	...	...	...	...	...	...	...	...	...	...	...	...	...	*With lengthening piece. †Mark I. gun only.					
...	...	...	...	...	...	...	a	...	*a	a	a	a	a	a		...	...	...	...	...	...	...	*Howitzer only.					
1	1	...	1	1	*1	1	...	1	1	...	...	...	...	...	...	...	...	...	...	...	...	...	* Gun only. [howitzer.					
...	...	...	...	...	*1	...	†1	...	‡1	1	1	1	...	...	...	...	...	...	...	...	...	...	*1 for each nature of †1 for howitzer and 1 for ‡Howitzer only. [gun.					
a	a	...	a	a	a	a	...	...	...	...	...	...	...	...	...	...	...	...	...	...	...	...	*Mark I gun only.					
...	...	...	...	...	...	...	...	...	*1	...	...	...	...	...	...	...	...	...	...	...	...	...	*Gun only.					
...	...	...	...	...	...	...	...	1	...	...	...	...	...	...	...	...	...	...	...	...	...	...						
...	...	...	...	...	...	...	...	...	...	...	...	...	...	...	...	...	...	...	...	...	...	...	*When specially allowed for measuring discs of protecting pads, cup, obturating, &c., of the larger natures of guns.					
a	a	a	a	a	a	a	a	a	a	a	a	...	...	...	...	...	...	...	...	...	...	...						

† Stamped bore.
§ Stamped chamber. } Refer to 10·4-inch R.M.L. only.

Digitized by Google

TABLE B.—List of Tools required for the Cleaning, Examination, Bronze

Tools.	Nature. 8-inch and 68-pr.	32-pr.	24-pr.	12-pr.	9-pr.	32-pr. S.B. B.L.
Woolwich Store Charge, No. 10.						
Braces, smiths	*a*	*a*	*a*	*a*	*a*	*a*
Braces, smiths — Drills, vent	*a*	*a*	*a*	*a*	*a*	*a*
Braces, smiths — Rimers, vent, short	*a*	*a*	*a*	*a*	*a*	*a*
Brushes ... — gun, hard, S.B.	1	*a*	1	1	1	*a*
Brushes ... — gun, soft — large	1	...	...	...	...	...
Brushes ... — gun, soft — small	...	*a*	*a*	*a*	*a*	*a*
Gauges, vent, 15-inch ... ... sets	*a*	*a*	*a*	*a*	*a*	...
Holders, brush — No. 1	*a*	*a*	*a*	*a*	*a*	...
Holders, brush — No. 2	*a*	*a*	*a*	*a*	*a*	*a*
Holders, brush — No. 4	...	...	...	...	...	...
Lamps, examining bore, small	*a*	*a*	*a*	*a*	*a*	*a*
Scrapers, ordnance — bore — round — crown	*a*	*a*	*a*	*a*	*a*	...
Scrapers, ordnance — bore — round — half round	*a*	*a*	*a*	*a*	*a*	*a*
Scrapers, ordnance — bore — round — round ... ... pairs	1	*a*	1	1	1	*a*
Scrapers, ordnance — bore — round — Holders	1	1*	1	1		*
Scrapers, ordnance — bore — round — Tongs	*a*	*a*	*a*	*a*	*a*	*a*
Scrapers, ordnance — bore — round — Wrenches	*a*	*a*	*a*	*a*	*a*	*a*
Scrapers, ordnance — bore — chamber — medium	*a*	*a*	...	...	...	...
Scrapers, ordnance — bore — chamber — small	...	*a*	*a*	*a*	...	...
Scrapers, ordnance — bore — exterior	*a*	*a*	*a*	*a*	*a*	*a*
Scrapers, ordnance — bore — vent — half round	*a*	*a*	*a*	*a*	*a*	*a*
Scrapers, ordnance — bore — vent — spring	*a*	*a*	*a*	*a*	*a*	*a*
Scrapers, ordnance — bore — pointed	*a*	*a*	*a*	*a*	*a*	*a*
Searchers — spring — 8 prongs	*a*	*a*	...	...	...	*a*
Searchers — spring — 6 prongs	...	...	*a*	...	...	...
Searchers — spring — 4 prongs	...	..	...	*a*	*a*	...
Searchers — spring — Wrenches	*a*	*a*	*a*	*a*	*a*	*a*
Stoves, lamp	*a*	*a*	*a*	*a*	*a*	*a*
Woolwich Store Charge, No. 25.						
Brushes, paint — ground, 000	...	...	...	...	...	...
Brushes, paint — unground, 000	...	...	...	...	...	...
Brushes, paint — sash tool, No. 8	...	...	...	...	...	...
Woolwich Store Charge, No. 29.						
Instruments, taking impressions, vents, No. 1	*a*	*a*	*a*	*a*	*c*	...
Instruments, taking impressions, vents — Blocks, adjusting, No. 1, S.B.	*d*1	1	1	1	*c*	...
Instruments, taking impressions, vents — Plates, No. 1, B. ...	*a*	*a*	*a*	*a*	*c*	...

Digitized by Google

Painting and Lacquering of the various natures of Cast-iron and Ordnance.

	Remarks.
	a. Common to all. One only of each required whatever the nature or number of guns to be cleaned or examined.
..... For end of bore	for lacquering only.
	For end of bore.
	Used for scraping any part left untouched by the round scraper.
	Used to scrape from the sides of the bore all lacquer and rust. The semi-circular scrapers are to be carefully ground to a sharp and even edge, to correspond exactly with the curve of the bore, and then fixed to the plates of the spring, which is attached to the stave. The instrument is to be inserted, and screwed out until the scrapers bear evenly and tightly against the sides of the bore; it is then to be worked up and down the whole length of the bore, being at the same time turned gradually round, until the bore is perfectly clean and smooth. This operation requires the united strength of three or four men. The Superintendent of the party is to see that the scrapers are re-sharpened as soon as they become blunt, and that they are kept screwed out tightly against the sides of the bore during the whole of the operation.
	*Also S.B., B.L. 32-pr.
	For holding round scrapers during grinding.
	For fixing screws of scrapers, and expanding screws of holders.
	Only required for ordnance with Gomer chambers.
	Old swords, numbers according to requirements.
	For searcher points.
	For softening gutta percha.
	Issued as required for painting or lacquering.
	c. The instrument, etc., is too large for these guns; a piece of wood is used.
	d. One block for each nature.

Digitized by Google

TABLE C.

Quantities of Paint and Lacquer for Rifled Ordnance.

Description.		Quantities of Magnetic Oxide, each Coat.*		Quantities of Lacquer for Bores, one Coat.	
		lbs.	ozs.	lbs.	ozs.
Ordnance, B.L.	13·5-inch	7	8	4	12
	12 ,,	5	14	3	0
	10 ,,	6	0	4	0
	9·2 ,,	6	0	3	8
	8 ,,	5	0	2	0
	6 ,,	3	0	1	8
	5 ,,	1	8	0	12
	4 ,,	1	0	0	12
Ordnance, R.B.L.	7-inch 82 cwt.	1	8	0	6
	7-inch 72 ,,	1	8	0	5
	40-pr. 35 ,,	1	0	0	4
	40-pr. 32 ,,				
	20 ,, 16 ,,	0	12	0	4
	12 ,,	0	7½	0	2
	9 ,,	0	6	0	1¾
Ordnance, R.M.L.	17·72-inch	7	8	5	8
	16 ,,	5	0	4	8
	12·5 ,,	4	12	0	14
	12 ,, 35-ton	4	8	0	13
	12 ,, 25 ,,	3	4	0	12
	11 ,,	3	4	0	11
	10·4 ,,	5	0	4	8
	10 ,,	2	12	0	9
	9 ,,	2	0	0	8
	8-inch howitzer 70-cwt.	1	4	0	8
	8-inch howitzer 46 ,,	0	14	0	5
	7 ,, 7 tons	1	0	0	6
	7 ,, 6½ ,,				
	6·6 ,,	1	4	0	8
	6·6 ,, howitzer	0	14	0	6
	6·3 ,, ,,	0	12	0	4

57
Gen. No.
3450

* At certain stations the guns (and works) will be painted to harmonize with the surroundings of the work. Paint of various colours will therefore be required, and will be allowed in the proportions herein laid down for magnetic oxide, except in the case of French grey, light brown, and stone-colour paints (which are heavier than magnetic oxide), of which 25 per cent. more will be allowed where such is used. French grey consists of the following ingredients:—

57
I. of Wight
886

	lbs.	ozs.
Lead, white, ground	7	0
Driers, patent	0	9
Black, lamp, ground	0	3
Red, Venetian	0	0½
Oil, linseed, raw	2	4
Turpentine	0	4
Yellow ochre, stone ground	0	4½

,,
1001

Digitized by Google

TABLE C—*continued.*

	Description.		Quantities of Magnetic Oxide, each Coat.*	Quantities of Lacquer for Bores, one Coat.
			lbs. ozs.	lbs. ozs.
38407 Equip. 1537	Ordnance, R.M.L.	80-pr.	1 4	0 8
		64 ,, 71 cwt.	1 2	0 6
		64 ,, 64 ,, ...		
		64 ,, 58 ,, ...		
		40 ,, ...	0 14	0 4
		25 ,, ...	0 12	0 3
57 Gen. No. 3450		16 ,, ...	0 7	0 2
		15 ,, ...		
		13 ,, ...		
		9 ,, ...	0 6	0 1¼
		7 ,, (150 and 200 lbs.)	0 4	0 1¼
		4-inch howitzer	0 7	0 2
		2·5 ,, ...	0 6	0 2
57 Colchester 3301	Ordnance, Q.F. ...	4·7-inch	1 8	0 12
		12-pr.	0 10	0 4
		6-pr.	0 6	0 2
		3 ,, ...	0 5	0 1½

* See foot-note on previous page.

Digitized by Google

TABLE D.

Quantities of Paint and Lacquer for the Exterior and Bores of S.B. Ordnance.

Description.				Quantities of Magnetic Oxide, each Coat.		Quantities of Lacquer for Bores, one Coat.	
				lbs.	ozs.	lbs.	ozs.
Ordnance, S.B.	Carronades	32-pr.		0	6	0	3
		24 ,,		0	6	0	3
		18 ,,		0	4	0	2
		12 ,,		0	4	0	2
	Guns	8-inch	65 cwt.	1	0	0	6
			60 ,,	1	0	0	6
			54 ,,	0	14	0	5
		68-pr.	112 ,,	1	8	0	10
			95 ,,	1	4	0	8
			63 ,,	1	2	0	6
			58 ,,	1	2	0	6
			56 ,,	1	2	0	6
			50 ,,	1	0	0	6
			48 *or* 50 cwt.	1	0	0	5
		32 ,,	45 cwt.	1	0	0	5
			42* ,,	0	12	0	5
			40 ,,	0	12	0	5
			39 ,,	0	12	0	5
			32 ,,	0	10	0	4
			25 ,,	0	8	0	4
		24 ,,	50 ,,	1	0	0	4
			48 ,,	1	0	0	4
			20 ,,	0	8	0	3
		12 ,,	34 ,,	0	12	0	3
			33 ,,	0	12	0	3
			32 ,,	0	8	0	2
		9 ,,	28 ,,	0	10	0	3
			24 ,,	0	8	0	2
	Howitzers	8-inch		0	8	0	3

* Also 32-pr. S.B. B.L. guns.

Digitized by Google

TABLE E.

Table showing the Time and Working Pay allowed for Scraping, Cleaning, and Painting the different natures of Iron Ordnance.

	Description.	Scraping* and Cleaning Exterior and Interior.		Painting Exterior and Interior, one Coat.	
		Time for.	Amount.	Time for.	Amount.
38407 Equip. 1537		H. M.	s. d.	H. M.	s. d.
	13·5-inch	60 0	5 0	24 0	3 0
	12-inch	56 0	4 8	24 0	3 0
	10 ,, ...	36 0	3 0	15 0	1 10½
Ordnance, B.L.	9·2 ,, ...	36 0	3 0	11 30	1 5¼
	8 ,, ...	24 0	2 0	6 30	0 9½
	6 ,, ...	15 0	1 3	3 0	0 4½
	5 ,, ...	5 0	0 5	2 0	0 3
	4 ,, ...	5 0	0 5	2 0	0 3
	7-inch { 82 cwt. ... / 72 ,, ... }	10 0	0 10	1 30	0 2¼
Ordnance, R.B.L.	40-pr. { 35 ,, ... / 32 ,, ... }	5 0	0 5	1 0	0 1½
57 Gen. No. 3450	20 ,, 16 cwt.	3 0	0 3	0 30	0 0¾
	12 ,, ...	2 0	0 2	0 30	0 0¾
	9 ,, ...	2 0	0 2	0 30	0 0¾
	17·72-inch	40 0	3 4	8 30	1 0¾
	16 ,, ...	36 0	3 0	8 0	1 0
	12·5 ,, ...	26 0	2 2	4 0	0 6
	12 ,, { 35 tons ... / 25 ,, ... }	24 0	2 0	4 0	0 6
	11 ,, ...	20 0	1 8	3 0	0 4½
	10·4 ,, ...	36 0	3 0	11 30	1 5¾
	10 ,, ...	18 0	1 6	2 30	0 3¾
	9 ,, ...	15 0	1 3	2 0	0 3
	8-inch { 70 cwt. ... / howitzer { 46 ,, ... }	8 0	0 8	1 30	0 2¼
		7 0	0 7	1 0	0 1½
	7-inch { 7 tons ... / 6½ ,, ... }	12 0	1 0	2 0	0 3
Ordnance, R.M.L.	6·6 ,, howitzer	6 0	0 6	1 0	0 1½
38407 Equip. 1537	6·3 ,, ,, ...	5 0	0 5	0 45	0 1¼
	80-pr. ... ... { 6·6-inch gun	10 0	0 10	2 0	0 3
	64-pr. { 71 cwt. ... / 64 ,, ... / 58 ,, ... }	8 0	0 8	1 30	0 2¼
	40 ,, ...	6 0	0 6	1 0	0 1½
	25 ,, ...	4 0	0 4	1 0	0 1½
57 Gen. No. 3450	16 ,, ... / 15 ,, ... / 13 ,, ... / 9 ,, ...	2 0	0 2	0 30	0 0¾
	7 ,, 150 and 200 lb. ...	1 30	0 1½	0 30	0 0¾
	4-inch howitzer ... / 2·5-inch	2 0	0 2	0 30	0 0¾
57 Colchester 3301	4·7-inch	5 0	0 5	2 0	0 3
Ordnance, Q.F.	12-pr.	3 0	0 3	1 45	0 2¼
	6 ,, ...	2 0	0 2	0 30	0 0¾
	3 ,, ...	1 45	0 1¾	0 30	0 0¾

* The bores of rifled ordnance will not be scraped.

Digitized by Google

TABLE E—*continued.*

Description.			Scraping and Cleaning Exterior and Interior.		Painting Exterior and Interior, one Coat.	
			Time for.	Amount.	Time for.	Amount.
			H. M.	*s. d.*	H. M.	*s. d.*
Ordnance, S.B.	Carronades	32-pr.	4 0	0 4	0 45	0 1¼
		24 ,,				
		18 ,,				
		12 ,,	3 0	0 3	0 30	0 0¾
	Guns	8-inch 65 cwt.	8 0	0 8	1 30	0 2½
		8-inch 60 ,,				
		8-inch 54 ,,				
		68-pr. 112 ,,	10 0	0 10	1 30	0 2½
		68-pr. 95 ,,				
		63 ,,	8 0	0 8	1 30	0 2¼
		58 ,,				
		56 ,,				
		50 ,,				
		48 *or* 50 cwt.				
		32 pr. 45 cwt.	7 0	0 7	1 15	0 2
		42† ,,				
		40 ,,				
		39 ,,				
		32 ,,	6 0	0 6	1 0	0 1½
		25 ,,				
		24 ,, 50 ,,	7 0	0 7	1 15	0 2
		24 ,, 48 ,,				
		24 ,, 20 ,,				
		12 ,, 34 ,,	6 0	0 6	1 0	0 1½
		12 ,, 33 ,,				
		12 ,, 22 ,,				
		9 ,, 28 ,,	4 0	0 4	0 45	0 1¼
		9 ,, 24 ,,				
	Howitzers	8 ,,	4 0	0 4	0 45	0 1¼

† Also 32-pr. S.B.B.L. guns.

Digitized by Google

TABLE F.

The following Table gives the Quantity of Paint, &c., required for one of each of the following Carriages and Slides, L. for one Coat.

	Description.			Paint prepared, magnetic oxide.*	Putty.	Remarks.
				lb. oz.	lb. oz.	
57 Portsmouth 2753	**Blocks**, pivot, No. 31, with radial arms, curbs, and racer			8 0	0 4	For 9-inch R.M.L., 7 ft. parapet "C," Mark III.
Carriages, garrison	B.L. ...	12-in.		6 0	0 12	
		6-in. V.C.P. Mk. I.		1 8	—	
	R.B.L. ...	7-in. Moncrieff ...		14 0	1 8	With slide, L.
		40-pr. common ...		2 0	0 4	¾ gill of boiled linseed oil for coins.
	R.M.L. ...	17·72-in.		10 0	1 0	
		16-in.		6 8	1 0	Turret.
		12·5-in.	casemate or dwarf, also converted small port	5 8	0 12	With hydraulic buffer.
			casemate or dwarf O.P.	4 12	0 12	Without hydraulic buffer.
			small port, 7-ft. recoil	6 0	0 12	With hydraulic buffers.
			small port, 6-ft. recoil	5 8	0 12	Without hydraulic buffers.
		12-in. 35 tons ...		4 12	0 12	
		11-in. (and 12-in. 25 tons)		4 0	0 12	
		10·4-in....		7 0	0 12	
		10-in.	casemate, low casemate or dwarf	3 0	0 12	
38407 Equip. 1442			small port...	4 0	0 12	
			7 ft. parapet "C"	3 12	0 12	
,, 1442		9-in.	casement or dwarf	2 12	0 8	¾ gill of boiled linseed oil for coins.
			Moncrieff ...	24 0	4 0	With slide.
			8 ft. parapet	3 0	0 8	
			Mark II. ...	3 0	0 8	

* At certain stations the guns, carriages, and slides (and works) will be painted to harmonize with the surroundings of the work. Paint of various colours will therefore be required, and will be allowed in the proportions herein laid down for magnetic oxide, except in the case of French grey, light brown, and stone-colour paints (which are heavier than magnetic oxide), of which 25 per cent. more will be allowed where such is used. French grey consists of the following ingredients:—

57 I. of Wight 886

	lbs.	ozs.
Lead, white, ground...	7	0
Driers, patent	0	9
Black, lamp, ground...	0	3
Red, Venetian	0	0½
Oil, linseed, raw	2	4
Turpentine	0	4
Yellow ochre, stone ground	0	4½

Digitized by Google

TABLE F—*continued.*

Description.				Paint prepared, magnetic oxide.*	Putty.	Remarks.
				lb. oz.	lb. oz.	
Carriages, garrison	R.M.L.	High Angle	9-in. Mk. I.	57 0	1 0	Complete with racer.
			9-in. Mk. II.	41 0	1 0	Complete with pivot.
			9-in. & 10-in. Mk. III.	37 0	1 0	Complete with racers.
		7-in.	casemate or dwarf	2 8	0 8	¾ gill of boiled linseed oil for coins.
			Moncrieff	14 0	2 0	With slide, L.
		64-pr.	71 cwt. and 64 cwt. common No. 1,	2 0	0 6	¾ gill of boiled linseed oil for coins.
			58 cwt. common No. 2			
			58 cwt. Moncrieff.	12 0	1 8	With slide, L.
	barbette, B.L.	10-in.	9·2-in.... ...	12 0	1 8	
		8-in.		12 0	1 0	
		6-in.		12 0	1 0	
	disappearing, B.L.	10-in.†	9·2-in.†...	50 0	1 12	
				50 0	1 12	
		6-in.†		30 0	1 8	With shield.
				17 0	1 0	Without shield.
Carriages, garrison, sliding, medium		No. 1 (R.B.L. 7-in.)...		3 4	0 8	
		No. 4 (R.B.L. 40-pr.)		3 8	0 8	With hydraulic buffer.
		No. 5 (R.B.L. 20-pr.)		2 8	0 8	
		No. 6 (S.B.B.L 32-pr.)		3 8	0 8	
		No. 7 (R.M.L. 7-in. 6½ tons 6-ft. parapet)		3 8	0 8	
		No. 8 (R.M.L. 64-pr. 64 cwt. Mark III, 6-ft. parapet)		3 0	0 8	For circular buffer.
		No. 9 (R.M.L. 64-pr. 64-cwt., 5-ft. 6-in. parapet)		3 0	0 8	
		No. 14 (R.M.L. 40-pr.)		3 8	0 4	
	B.L. ...	12-in.		11 0	1 4	
		6-in. V.C.P. Mk. I, with shield and pivot		12 8	0 4	
		17·72-in.		32 0	1 8	With hydraulic buffer.
		16-in.		58 0	4 0	Turret, with hydraulic buffers.
Slides, L.	R.M.L. ...	12·5-in.	casemate (with traversinggear)	7 12	1 2	With hydraulic buffer.
			casemate (with traversinggear)	7 0	1 2	Without hydraulic buffer.
			dwarf (with traversing gear)	8 12	1 2	With hydraulic buffer and pivot block.

57 Portsmouth 2347

57 Gen. No. 2823

* See footnote * on page 153.

† Where white paint is used, as laid down in paragraph 541, 33 lbs. of white paint and 30 lbs. of magnetic oxide will be issued for 10-inch and 9·2-inch, and 10 lbs. of white paint and 24 lbs. of magnetic oxide for 6-inch B.L. mountings.

Digitized by Google

TABLE F—*continued.*

Description.				Paint prepared, magnetic oxide.*	Putty.	Remarks.
				lb. oz.	lb. oz.	
			dwarf (with traversing gear)	8 0	1 2	With pivot block and without hydraulic buffer.
			small port, 7-ft. recoil	7 12	1 2	Without hydraulic buffers.
			small port, 6-ft. recoil	8 4	1 2	With hydraulic buffers.
38407 Equipt. 1537		12·5-in.	7-ft. parapet "C" converted casemate, Mark III, special converted dwarf "C"	12 0	1 2	
			converted small port	12 4	1 2	With hydraulic buffer.
		12-in. 35 tons, dwarf "C" (with traversing gear)		8 12	1 2	With hydraulic buffer and pivot block.
Slides, L., R.M.L. ...		11-in. (and 12-in. 25 tons)	casemate (with traversing gear)	7 0	1 2	With hydraulic buffer.
			dwarf (with traversing gear)	8 8	1 2	With hydraulic buffer and pivot block.
			7-ft. parapet, "C" (with traversing gear)	12 8	1 4	With hydraulic buffers.
		10·4-in. (with traversing gear)		19 0	1 0	With pivot block.
		10-in.	casemate (with traversing gear)	6 8	1 0	With hydraulic buffer.
			dwarf (with traversing gear)	8 8	1 2	With hydraulic buffer and pivot block.
			small port (with traversing gear)	6 8	1 0	With hydraulic buffer.
			7-ft. parapet "C" (with traversing gear)	12 8	1 4	With hydraulic buffers.
57 Portsmouth 2347		9-in.	7-ft. parapet "C" (with traversing gear)	Mk. I 11 0	1 4	With hydraulic buffers.
				,, II & III 13 0	1 4	

* See footnote * on page 153.

Digitized by Google

TABLE F—*continued.*

Description.				Paint prepared, magnetic oxide.*	Putty.	Remarks.
				lb. oz.	lb. oz.	
Slides, L.	R.M.L.	9-in.	8-ft. parapet (with traversing gear)	15 0	1 4	With hydraulic buffer.
			casemate (with traversing gear)	5 12	1 0	With hydraulic buffer.
			dwarf (with traversing gear)	7 10	1 2	With hydraulic buffer and pivot blocks.
		7-in.	casemate	3 8	1 0	With hydraulic buffer.
			dwarf	4 2	1 0	With hydraulic buffer and pivot blocks.
	barbette, B.L.	10-in.	Mk. I†	19 0	1 0	With pivot block
			,, II & III†	40 0	1 12	
		9·2-in.	,, I†	19 0	1 0	
			,, II†	40 0	1 12	
		8-in.		19 0	1 0	
		6-in.		21 0	1 3	
	medium	Nos. 1 to 3 (R.B.L. 7-in.)		5 0	0 8	
		No. 4 (R.B.L. 40-pr.)		4 0	0 8	
		No. 5 (R.B.L. 20-pr.)		3 0	0 8	
		No. 6 (S.B.B.L. 32-pr.)		4 0	0 8	
		No. 7 (R.M.L. 7-in. 6½ tons)		5 8	0 12	
		No. 8 (R.M.L. 64-pr. 64 cwt. Mark III 6-ft. parapet)		4 0	0 12	With circular buffer and pivot block.
		No. 9 (R.M.L. 64-pr. 64 cwt., 5-ft. 6-in. parapet)		4 0	0 1½	With hydraulic buffer and pivot block.
		No. 10 (R.M.L. 40-pr.)		4 8	0 4	With hydraulic buffer.
Yokes, B.L. 12-in. ...				5 8	0 8	

38407
Equip.
1442

* See footnote * on page 153. † With traversing gear.

Digitized by Google

(EQ. E.)

TABLE G.

The following Table gives the Time and Working Pay for Scraping, Cleaning, and Painting one of each of the following Carriages and Slides, L.

Description.	Scraping and Cleaning.		Painting.				Remarks.
			Priming, or first Coat.		Stopping, and second Coat.		
	Time for.	Amount.	Time for.	Amount.	Time for.	Amount.	
	H. M.	s. d.	H. M.	s. d.	H. M.	s. d.	
Blocks, pivot, No. 31, with radial arms, curbs and racer.	3 0	0 3	4 0	0 6	4 0	0 6	For 9-inch, R.M.L., 7 ft. parapet, "C," Mark III.
Carriages, garrison — B.L. 12-inch	12 0	1 0	8 0	1 0	11 0	1 4½	
6-inch V.C.P., Mark I...	1 30	0 1½	2 0	0 3	2 0	0 3	
R.B.L. — 7-inch Moncrieff	24 0	2 0	21 0	2 7½	23 0	2 10½	
R.B.L. — 40-pr. common, No. 2	3 0	0 3	3 0	0 4½	3 0	0 4½	
R.M.L. — 17·72-inch	12 0	1 0	11 0	1 4½	12 0	1 6	
R.M.L. — 16-inch (turret)	14 0	1 2	10 0	1 3	12 0	1 6	
R.M.L. — 12·5 ,, casemate or dwarf* ...	13 0	1 1	9 0	1 1½	12 0	1 6	With hydraulic buffer.
R.M.L. — 12·5 ,, ,, ,, O.P.	12 0	1 0	8 0	1 0	11 0	1 4½	Without hydraulic buffer.
R.M.L. — 12·5 ,, small port 7 ft. recoil ...	15 0	1 3	10 0	1 3	13 30	1 8½	With hydraulic buffers.
R.M.L. — 12·5 ,, small port 6 ,, ,, ...	14 0	1 2	9 0	1 1½	12 30	1 6¾	Without hydraulic buffers.
R.M.L. — 12 ,, 35 tons	12 0	1 0	8 0	1 0	11 0	1 4½	
R.M.L. — 11 ,, (and 12-in. 25 tons)							
R.M.L. — 10·4 ,, barbette	11 0	0 11	8 0	1 0	10 0	1 3	
R.M.L. — 10 ,, casemate, low... ,, or dwarf	11 0	0 11	7 30	0 11¼	10 0	1 3	
R.M.L. — 10 ,, small port	12 0	1 0	8 0	1 0	11 0	1 4½	
R.M.L. — 9-inch 7 ft. parapet "C" ...	13 0	1 1	10 0	1 3	12 0	1 6	
R.M.L. — 9-inch casemate or dwarf ...	10 0	0 10	7 0	0 10	9 0	1 1½	
R.M.L. — 9-inch Moncrieff	70 0	5 10	50 0	6 3	60 0	7 6	
R.M.L. — 9-inch Mark II	11 0	0 11	8 0	1 0	10 0	1 3	

* Also converted small port.

57 Portsmouth 2753
38407 Equip. 1442
L 2
Digitized by Google

TABLE G—*continued.*

Description.	Scraping and Cleaning.		Painting.				Remarks.
			Priming, or first Coat.		Stopping, and second Coat.		
	Time for.	Amount.	Time for.	Amount.	Time for.	Amount.	
	H. M.	s. d.	H. M.	s. d.	H. M.	s. d.	
Carriages, garrison — R.M.L. — High angle — 9-inch, Mark I ...	36 0	3 0	45 0	5 7½	48 0	6 0	Including racer.
57 — 9-inch, Mark II ...	33 0	2 9	40 0	5 0	42 0	5 3	Including pivot
Portsmouth — 9-inch and 10-inch, Mark III.	29 0	2 5	36 0	4 6	38 0	4 9	Including racer.
2347 — 7-inch — casemate or dwarf ...	10 0	0 10	7 0	0 10	9 0	1 1½	
38407 Equip 1537 — Moncrieff	40 0	3 4	30 0	3 9	36 0	4 6	
R.M.L. 32-pr. ... — 71 cwt. and 64 cwt., common, No. 1	3 0	0 3	3 0	0 4½	3 0	0 4½	
58 cwt., common, No. 2							
58-cwt. Moncrieff ...	32 0	2 8	25 0	3 1½	30 0	3 9	
B.L. barbette ... — 10-inch — Mark I ...	14 0	1 2	10 0	1 3	13 0	1 7½	
38407 Equip. 1537 — Mark II and III.	14 0	1 2	10 0	1 3	12 0	1 6	
9·2-inch — Mark I, Ia, and Ib	14 0	1 2	10 0	1 3	13 0	1 7½	
Mark II ...	14 0	1 2	10 0	1 3	12 0	1 6	
8-inch	14 0	1 2	10 0	1 3	13 0	1 7½	
6-inch	14 0	1 2	10 0	1 3	13 0	1 7½	
B.L. disappearing — 10-inch ... ... — 9·2-inch... ...	50 0	4 2	43 0	5 4½	48 0	6 0	
6-inch	42 0	3 6	34 0	4 3	40 0	5 0	With shield.
	28 0	2 4	22 0	2 9	26 0	3 3	Without shield.
sliding, medium — No. 1 (R.B.L. 7-inch)	10 0	0 10	7 0	0 10½	9 0	1 1½	
,, 4 (R.B.L. 40-pr.)	8 0	0 8	5 30	0 8½	7 0	0 10½	
,, 5 (,, 20 ,,)	6 30	0 6½	4 0	0 6	5 0	0 7½	With hydraulic buffer.
,, 6 (S.B. B.L. 32-pr.)	3 30	0 3½	3 30	0 5½	4 0	0 6	

Digitized by Google

Carriages, garrison, sliding, medium	No. 7 (R.M.L. 7-inch 6½ tons, 6 ft. parapet).		9	0	0	9	7	0	0	10½	8		1	0	With hydraulic buffer.
	,, 8 (R.M.L. 64-pr. 64 cwt. Mark III gun, 6ft. parapet).		10	0	0	10	7	0	0	10½	9	0	1	1½	For circular buffer.
	,, 9 (R.M.L. 64-pr. 64 cwt., 5 ft. 6 in. parapet).		9	0	0	9	6	0	0	9	8	0	1	0	
	,, 14 (R.M.L. 40-pr.)		5	0	0	5	4	0	0	6	4	30	0	6¾	
Slides, L. — B.L.	12-inch		22	0	1	10	15	0	1	10½	20	0	2	6	
	6-inch V.C.P., Mark I, with shield and pivot		10	30	0	10½	12	0	1	6	13	0	1	7½	
Slides, L. — R.M.L.	17·72-inch		36	0	3	0	33	0	4	1½	36	0	4	6	
	16-inch (turret)		154	0	12	10	119	0	14	10½	139	0	17	4½	With hydraulic buffer.
	12·5-in.	casemate (with traversing gear)	16	0	1	4	10	0	1	3	15	0	1	10½	With hydraulic buffer.
		,, ,,	15	0	1	3	10	0	1	3	13	30	1	8¼	Without hydraulic buffer.
		dwarf (with traversing gear)	18	0	1	6	11	0	1	4½	16	0	2	0	With hydraulic buffer and pivot block.
		,, ,,	17	0	1	5	10	0	1	3	15	0	1	10½	With pivot block, but without hydraulic buffer.
		small port — 7 feet recoil (with traversing gear)	17	0	1	5	11	0	1	4½	16	0	2	0	Without hydraulic buffers.
		small port — 6 feet recoil (with traversing gear)	18	0	1	6	12	0	1	6	17	0	2	1½	With hydraulic buffers.
		7-ft. parapet "C" converted — casemate, Mark III, special dwarf "C"	19	0	1	7	16	0	2	0	19	0	2	4½	
		converted small port	19	0	1	7	16	0	2	0	19	0	2	4½	With hydraulic buffer.
	12-inch 35 tons, dwarf "C" (with traversing gear)		18	0	1	6	11	0	1	4½	16	0	2	0	With hydraulic buffer and pivot block.
	11-inch and 12-inch 25 tons ...	casemate (with traversing gear)	16	0	1	4	10	0	1	3	15	0	1	10½	With hydraulic buffer.
		dwarf ... (with traversing gear)	18	0	1	6	11	0	1	4½	16	0	2	0	With hydraulic buffer and pivot block.
		7 ft. parapet, C" (with traversing gear)	19	0	1	7	16	0	2	0	19	0	2	4½	With hydraulic buffer.

38407
Equip.
1537

Digitized by Google

TABLE G—*continued.*

Description.	Scraping and Cleaning. Time for.	Scraping and Cleaning. Amount.	Painting. Priming, or first Coat. Time for.	Painting. Priming, or first Coat. Amount.	Painting. Stopping, and second Coat. Time for.	Painting. Stopping, and second Coat. Amount.	Remarks.
	H. M.	*s.* *d.*	H. M.	*s.* *d.*	H. M.	*s.* *d.*	
Slides, L. R.M.L. 10-inch 10·4-inch barbette... ...	20 0	1 8	15 0	1 10½	18 0	2 3	With pivot block.
R.M.L. 10-inch casemate ...	13 0	1 1	9 0	1 1½	12 0	1 6	With hydraulic buffer.
R.M.L. 10-inch dwarf ...	14 0	1 2	10 0	1 3	13 0	1 7½	With hydraulic buffer and pivot block.
R.M.L. 10-inch small port ...	15 0	1 3	10 0	1 3	13 30	1 8½	With hydraulic buffer.
R.M.L. 7 ft. parapet "O"	19 0	1 7	16 0	2 0	19 0	2 4½	
R.M.L. 9-inch casemate ...	12 0	1 0	8 0	1 0	11 0	1 4½	With hydraulic buffer.
R.M.L. 9-inch dwarf	14 0	1 2	10 0	1 3	13 0	1 7½	With hydraulic buffer and pivot block.
R.M.L. 9-inch 7 ft. parapet "O" Mk. I	17 0	1 5	14 0	1 9	17 0	2 1½	
R.M.L. 9-inch 7 ft. parapet "O" ,, II &III	19 0	1 7	16 0	2 0	19 0	2 4½	
B.L barbette 10-inch Mark I ...	20 0	1 8	15 0	1 10½	18 0	2 3	With pivot block.
B.L barbette 10-inch ,, II & III	48 0	4 0	40 0	5 0	44 0	5 6	With pivot block.
B.L barbette 9·2-inch ,, I ...	20 0	1 8	15 0	1 10½	18 0	2 3	With pivot block.
B.L barbette 9·2-inch ,, II ...	48 0	4 0	40 0	5 0	44 0	5 6	With pivot block.
B.L barbette 8-inch	20 0	1 8	15 0	1 10½	18 0	2 3	With pivot block.
B.L barbette 6-inch	24 0	2 0	17 0	2 1½	20 0	2 6	With pivot block.
R.M.L. 7-inch casemate	12 0	1 0	8 0	1 0	11 0	1 4½	With hydraulic buffer.
R.M.L. 7-inch dwarf	12 0	1 0	9 0	1 1½	12 0	1 6	With hydraulic buffer and pivot block.
medium Nos. 1 to 3 (R.B.L. 7-inch) ...	11 0	0 11	8 0	1 0	10 0	1 3	
medium No. 4 (R.B.L. 40-pr.)	8 30	0 8½	6 0	0 9	7 30	0 11¼	
medium ,, 5 (,, 20 ,,)	4 30	0 4½	3 30	0 5¼	4 0	0 6	
medium ,, 6 (S.B. B.L. 32-pr.)	3 0	0 3	3 0	0 4½	3 30	0 5¼	
medium ,, 7 (R.M.L. 7-inch 6½ tons) ...	12 0	1 0	10 0	1 3	11 0	1 4½	
medium ,, 8 (R.M.L. 64-pr. 64 cwt. Mk. III gun, 6 ft. parapet)	12 0	1 0	9 0	1 1½	11 0	1 4½	With circular buffer and pivot block.
medium ,, 9 (R.M.L. 64-pr. 64 cwt., 5 ft. 6 in. parapet)	11 0	0 11	8 0	1 0	10 0	1 3	With hydraulic buffer and pivot block.
medium ,, 10 (R.M.L. 40-pr.)	6 0	0 6	5 0	0 7½	5 30	0 8¼	With hydraulic buffer.
Yokes, B.L. 12-inch	9 0	0 9	8 0	1 0	10 0	1 3	

57
Portsmouth
2347
38407
Equip.
1442
38407
Equip.
1537

Digitized by Google

TABLE H.

57
G. No.
5228

Quantity of Paint, &c., required for Painting one of each of the following Articles with one Coat.

Description.	Paint prepared.								Putty.		Remarks.
	Lead Colour.		Magnetic Oxide.		Stone Colour.		Red.				
	lbs.	ozs.	lbs.	ozs.	lbs.	ozs.	lbs.	ozs.	lbs.	ozs.	
Woolwich Store Charge, No. 2.											
57 Dover 5912 **Buckets**, water, G.S., leather	—	4	—	—	—	—	—	—	—	—	
Drivers, pile, Swiss	—	8	—	—	—	—	—	—	0	1	
57 Jamaica 3657 **Posts**, picket { 8 feet	0	12	—	—	—	—	—	—	—	—	
{ 6 ,, ...	0	4	—	—	—	—	—	—	—	—	
{ 5 ,, ...											
Woolwich Store Charge, No. 4.											
Carts { low, projectile	6	0	—	—	—	—	—	—	0	10	
{ shot	12	0	—	—	—	—	—	—	0	8	
{ sling	9	0	—	—	—	—	—	—	1	2	
{ trench	—	8	—	—	—	—	3	12	1	12	
Drugs ... { gun { 25 tons	21	8	—	—	—	—	—	—	0	4	With brake and movable bolster.
{ gun { 5 ,, ...	7	8	0	12	—	—	—	—	2	4	
{ large	8	8	0	12	—	—	—	—	1	0	
{ medium	4	0	0	6	—	—	—	—	1	0	
{ small	3	0	0	6	—	—	—	—	0	8	
Limbers, wagon, sling { 12 tons	3	8	—	—	—	—	—	—	0	8	
{ 7 ,, ...	2	8	—	—	—	—	—	—	0	12	
{ 6 ,, ...	4	8	—	—	—	—	—	—	0	4	
Wagons, sling (without limber) { 12 tons ...	10	0	—	—	—	—	—	—	0	8	
{ 7 ,, ...	6	0	—	—	—	—	—	—	0	8	
{ 6 ,, ...	10	8	—	—	—	—	—	—	1	8	

Digitized by Google

TABLE H—*continued.*

	Description.	Paint prepared.								Putty.		Remarks
		Lead Colour.		Magnetic Oxide.		Stone Colour.		Red.				
8407 Equip. 1537	*Woolwich Store Charge, No.* 10.	lbs.	ozs.	lbs.	ozs.	lbs.	ozs	lbs.	ozs.	lbs.	ozs.	
	Apparatus, lifting guns, hydraulic... ... / *Hurst* pattern ...	—	—	0	8	—	—	—	—	—	—	
		21	0	—	—	—	—	—	—	1	8	
	Crabs, hoisting guns 50 tons	5	8	4	8	—	—	—	—	0	12	
	25 ,, ...	4	0	3	0	—	—	—	—	0	12	
	Frames cover, ordnance, large ($16\frac{1}{2}$ ft. × 8 ft.).	1	12	—	—	—	—	—	—	0	4	
	iron, roller one horse	4	8	2	0	—	—	—	—	0	8	
	two ,, ...	6	0	2	12	—	—	—	—	0	12	
	store, hydraulic jack	—	—	0	12	—	—	—	—	—	—	
	Jacks, lifting ... hydraulic, G.S. 30 tons ..	—	—	0	6	—	—	—	—	—	—	
	hydraulic, G.S. 20 ,, ...	—	—	0	4	—	—	—	—	—	—	
	hydraulic, G.S. 10 ,, ...	—	—	0	4	—	—	—	—	—	—	
	hydraulic, Tangye's $22\frac{1}{2}$,, ...	—	—	0	4	—	—	—	—	—	—	
	hydraulic, Tangye's 15 ,, ...	—	—	0	4	—	—	—	—	—	—	
	hydraulic, Tangye's $7\frac{1}{2}$,, ...	—	—	0	4	—	—	—	—	—	—	
	screw, Clerk's	0	4	—	—	—	—	—	—	—	—	
	Magazines, portable	2	12	—	—	—	—	—	—	0	4	
	Woolwich Store Charge, No. 20.											
38407 Equip. 1537	**Cases**, powder, metal-lined, whole	—	—	—	—	7	8	—	—	1	0	Per 10 cases.

Digitized by Google

Description.	Paint prepared.				Putty.		Remarks.
	Lead Colour.*		Magnetic Oxide.*				
	lbs.	ozs.	lbs.	ozs.	lbs.	ozs.	
Woolwich Store Charge, No. 12.							
30 Artillery 3082 **Spars**, steel, sheer, length 45 feet, mean circumference 35½ inches (two to a set) ... ... set	—	—	14	0	—	—	
Shoes, for above, 2 feet 6 inches square							
Timber, spars for sheers, 70 feet (2 to a set) .. .. sets	3	8	—	—	3	8	
Woolwich Store Charge, No. 13.							
Bars, splinter, limber, field, R.B.L., 20-pr.	0	6	—	—	0	1	¼ gill of raw linseed oil for side arms to each carriage.
Carriages, field (without limber) B.L. 15-pr.	5	12	—	—	0	8	
Carriages, field (without limber) B.L. 12 ,, ...	5	12	—	—	0	8	
Carriages, field (without limber) R.B.L. 20 ,, ...	7	12	—	—	0	12	
Carriages, field (without limber) R.B.L. 12 ,, ...	7	4	—	—	0	12	
Carriages, field (without limber) R.B.L. 9 ,, ...	6	8	—	—	0	12	
Carriages, R.M.L. 16 ,, ...	5	8	—	—	0	8	
Carriages, R.M.L. 13 ,, ...	5	4	—	—	0	8	
Carriages, R.M.L. 9 ,, ...	5	8	—	—	0	8	
Carriages, R.M.L. 7 ,, 200-lbs. Colonial... ...	4	0	—	—	0	8	
Carriages, R.M.L. 2·5-inch	2	8	—	—	0	4	
Carriages, field machine gun, Infantry Nordenfelt, 3-barrel, also Gardner, 2-barrel	6	0	—	—	0	6	
Carriages, field machine gun, Infantry Maxim, ·303-inch, and ·45-inch ...	3	8	—	—	0	4	¼ gill of raw linseed oil for side arms to each carriage.
Carriages, Q.F. 3-pr. travelling	4	8	—	—	0	4	

* See footnote * on page 153.

Digitized by Google

TABLE H—*continued.*

Description.	Paint prepared. Lead Colour.* lbs.	Paint prepared. Lead Colour.* ozs.	Paint prepared. Magnetic Oxide.* lbs.	Paint prepared. Magnetic Oxide.* ozs.	Putty. lbs.	Putty. ozs.	Remarks.
Woolwich Store Charge, No. 13—continued.							
Limbers field B.L. 15-pr.	5	8	—	—	0	8	
Limbers field B.L. 12 ,,							
Limbers field R.B.L. 20 ,,	6	8	—	—	0	12	
Limbers field R.B.L. 12 ,,							
Limbers field R.B.L. 9 ,,							
Limbers R.M.L. 16 ,,	6	4	—	—	0	12	
Limbers R.M.L. 13 ,, †	6	8	—	—	0	12	
Limbers R.M.L. 9 ,,	6	4	—	—	0	12	
Limbers R.M.L. 7 ,, 200-lbs. Colonial	6	0	—	—	0	8	
Limbers 2·5-inch	2	12	—	—	0	4	
Limbers Q.F., 3-pr. travelling	5	4	—	—	0	6	
Limbers wagon, forge, R.A. Mark I and I**	6	4	—	—	0	12	
Limbers wagon, forge, R.A. ,, II and II*							
Limbers wagon, forge, R.A. ,, III*	5	8	—	—	0	8	
Limbers wagon, store, R.A. ,, I and I*	6	4	—	—	0	12	
Limbers wagon, store, R.A. ,, II*	5	8	—	—	0	8	
Poles, wagons, and limbers	0	5	—	—	0	1	
Wagons ammunition and store, R.A.	16	0	—	—	2	0	
Wagons ammunition (without limbers) B.L. 15-pr.	6	8	—	—	0	8	
Wagons ammunition (without limbers) B.L. 12 ,,							
Wagons ammunition (without limbers) R.B.L. 20 ,,	9	4	—	—	1	0	
Wagons ammunition (without limbers) R.B.L. 12 ,,							
Wagons ammunition (without limbers) R.B.L. 9 ,,							
Wagons ammunition (without limbers) R.M.L. 16 ,,	7	12	—	—	0	12	
Wagons ammunition (without limbers) R.M.L. 13 ,, †	7	8	—	—	0	12	
Wagons ammunition (without limbers) R.M.L. 9 ,,	7	12	—	—	0	12	
Wagons ammunition (without limbers) R.M.L. 7 ,, 200 lbs. Colonial	7	0	—	—	0	12	
Wagons Artillery	15	0	—	—	2	0	

Digitized by Google

Wagons forge, R.A.	Mark I	4	4	—	—	0	12	
	,, I*	8	12	—	—	0	12	
	,, II	8	8	—	—	1	4	
	,, III	7	12	—	—	0	12	
store, R.A.	,, I	8	8	—	—	1	0	
	,, II							
	Woolwich Store Charge, No. 14.							
Axletrees, transporting slides, L, R.M.L.	bed, howitzer, R.M.L.	3	12	0	4	0	6	Including the wheels.
	11-inch (also 12-inch 25 tons)	4	0	—	—	0	6	,, ,,
	10-inch							
	9 ,,							
	7 ,,							
	slides, L, medium, wood	2	8	—	—	0	4	,, ,,
Barrows, projectile ...	Nos. 1 to 6	—	—	0	8	—	—	
	Nos. 10 and 11	0	12	—	—	0	2	
	road	1	8	—	—	0	1	
	shingle	2	0	—	—	0	4	
38407 Equip. 1537 **Bars,** splinter, limber, siege, wood		0	6	—	—	0	1	
Beds, howitzer, R.M.L.		—	—	3	12	0	4	
Buckets, sponge, garrison		0	4	—	—	—	—	
Capstans, crab		4	0	—	—	0	8	
Carriages, R.M.L. 25-pr., with top over-bank		7	0	—	—	0	12	¼ gill of raw linseed oil for side arms to each carriage.
Carriages, garrison: R.B.L. 40-pr., wood		5	0	0	8	0	12	
common converted non-recoil		6	4	0	8	0	12	
R.M.L., 64-pr., 58-cwt., depression, iron		—	—	2	0	0	6	
S.B.... 10-inch howitzer dwarf		5	0	—	—	0	12	
S.B.... 10-inch howitzer rear chock		5	0	0	4	0	12	
S.B.... 8-inch 65-cwt. common (also 60-cwt.)		5	0	0	8	0	12	
S.B.... 8-inch 65, 60, and 54-cwt., rear chock		5	0	0	4	0	12	
S.B.... 8-inch 54-cwt., dwarf		5	0	—	—	0	12	
S.B.... 8-inch howi'zer dwarf		4	4	—	—	0	12	
S.B.... 8-inch howi'zer rear chock		5	0	0	4	0	12	

* See footnote * on page 153.

† 6 ozs. lamp black paint in addition for trays.

Digitized by Google

TABLE H—*continued.*

Description.	Paint prepared.				Putty.		Remarks.
	Lead Colour.*		Magnetic Oxide*.				
Woolwich Store Charge, No. 14—continued.	lbs.	ozs.	lbs.	ozs.	lbs.	ozs.	
Carriages, garrison ... S.B. ... 32-pr. ... 63-cwt. ... common ...	5	0	0	8	0	12	
63-cwt. ... dwarf	5	0	—	—	0	12	
58 or 56-cwt., common, wood	5	0	0	8	0	12	
56-cwt., common, cast-iron	—	—	2	0	—	—	
50 or 45-cwt., common ...	5	0	0	8	0	12	
50-cwt., dwarf	5	0	—	—	0	12	
24-pr., 50-cwt. common iron ...	—	—	1	12	—	—	
24-pr., 50-cwt. common wood ...	5	0	0	8	0	12	
24-pr., 50-cwt. dwarf	5	0	—	—	0	12	
18-pr., 42 cwt. common iron ...	—	—	1	12	—	—	
18-pr., 42 cwt. common wood ...	4	4	0	8	0	12	
18-pr., 42 cwt. dwarf	4	4	—	—	0	12	
12-pr., 34 cwt.	—	—	1	8	—	—	
9 ,, 28 ,, ...							
6 ,, 23 ,, ...	—	—	1	4	—	—	
sliding, medium No. 2							
,, 3							
,, 10	4	8	—	—	0	4	
,, 11							
,, 12							
,, 13							
,, 15							
,, 16	6	12	—	—	1	0	
,, 17							
,, 18	6	0	—	—	1	0	

Digitized by Google

57	Carriages, garrison ...	sliding,	No. 19	4									
Gibraltar			,, 20										
5083		medium	,, 21										
			,, 22	6	8	—	—	1	0				
			,, 23										
			,, 24		12	—	—	1	0				
			,, 25	5									
57			... ...		0	—	—	0	12				
Colchester			4·7-inch, with shield and pivot plate	—	—	7	0	0	4				
3301	Carriages ...	garrison, Q.F.	12-pr., with shield and pedestal ...	—	—	5	0	—	—				
57		Q.F., recoil, 6-pr., embrasure and cone ...		—	—	1	12	—	—				
Portsmouth		R.B.L.	6-ft. parapet	9	—	—	—	0	12				
1763		40-pr.	wood	11	0	—	—	1	8				
			8-inch, 70 cwt. howitzer ...	8	12	—	—	1	0				
	Carriages, siege (without limber)	R.M.L.	8 ,, 46 ,, ...										
			6·6 ,, gun howitzer	8	4	—	—	1	0				
			6·3 ,, ...	7	4	—	—	1	0				
			64-pr., wood	6	12	—	—	0	12				
			40 ,, with top over bank...	9	12	—	—	1	0				
			25 ,, ...	7	0	—	—	0	12				
38407		S.B. ...	32-pr., 50 cwt.... ,, ...	15	8	—	—	2	0	¼ gill of raw linseed oil for side arms to each carriage.			
Equip.			24 ,, 50 ,, ...	15	0	—	—	2	0				
1537			18 ,, ...	17	0	—	—	2	0				
	Carriages, travelling (without limber)	B.L. ...	5-inch 6 ft. parapet	8	12	—	—	0	12				
57			4 ,, ...										
Portsmouth	Carriages, transporting guns up inclines			—	—	6	0	0	12	For 12·5-inch guns.			
2715	Chain, ammunition, life			—	—	20	0	0	8				
1	Cone, Q.F. recoil, 6-pr., for recoil carriages for Hotchkiss and Nordenfelt 6-pr., Q.F. guns			—	—	1	4	—	—				
1537	Gear for landing heavy guns at sea forts loading, and apparatus	chain		—	—	—	—	—	—	•			
57		remaining gear		14	0	80	0	—	—				
Portsmouth		washing out, 10·4-in. R.M.L. ...		—	—	5	0	0	8				
1763													

* See footnote * on page 153.

Digitized by Google

TABLE H—*continued.*

	Description.	Paint prepared. Lead Colour.* lbs.	ozs.	Magnetic Oxide.* lbs.	ozs.	Putty. lbs.	ozs.	Remarks.
	Woolwich Store Charge, No. 14—continued.							
	Gibraltar	5	0	0	4	—	—	With tackle and iron trucks.
38407 Equip. 1537	**Gyns**, triangle, heavy, hydraulic	0	8	4	0	0	4	
	triangle, with appurtenances: heavy ... tubular	1	8	4	0	0	8	
	triangle, with appurtenances: heavy ... wood	8	8	—	—	1	12	
	triangle, with appurtenances: light ... tubular	1	8	3	8	0	8	
	triangle, with appurtenances: light ... wood	8	0	—	—	1	12	
	triangle, with appurtenances: 16 feet	7	8	—	—	1	8	
	Limbers, field, R.M.L., 25-pr.	6	4	—	—	0	12	
	siege, B.L. 5-inch, 6-feet parapet	5	12	—	—	0	8	
	siege, B.L. 4 " " "							
	siege, R.B.L., 40-pr. iron...	5	8	—	—	0	8	
	siege, R.B.L., 40-pr. wood							
	siege, R.M.L. 8-inch, 70-cwt. howitzer ...							
	siege, R.M.L. 8 " 46 " " ...							
	siege, R.M.L. 6·6 " gun							
	siege, R.M.L. 6·6 " howitzer	5	12	—	—	0	8	
	siege, R.M.L. 6·3 " howitzer							
	siege, R.M.L. 64-pr.							
	siege, R.M.L. 40 "							
57 Gen. No. 3350	transporting, bed, howitzer, R.M.L.	6	0	—	—	0	8	
	transporting, slide, L. ... iron	5	0	—	—	0	8	
	transporting, slide, L. ... medium	2	8	—	—	0	4	
	Pivots, 10·4-in., R.M.L.	—	—	1	12	—	—	
38407 Equip. 1537	**Platforms** ... ground, slide L, medium, No. 15	9	0	—	—	1	8	
	Platforms ... ground, R.M.L. howitzer beds	10	0	—	—	4	0	
	Platforms ... siege, Clerk's	7	0	—	—	2	0	When fixed in position.
	Platforms ... siege, double-decked, "C" pivot (complete with pivot plates, &c.)	14	4	—	—	2	0	
57 I. of Wight 886	**Pump**, gyn, hydraulic	—	—	3	0	—	—	
		—	—	1	0	—	—	

* See footnote * on page 153.

Digitized by Google

	Description.	Paint prepared.								Putty.		Remarks.
		Lead Colour.		Magnetic Oxide.		Stone Colour.		Red.				
	Woolwich Store Charge, No. 14—continued.	lbs.	ozs.	lbs.	ozs.	lbs.	ozs.	lbs.	ozs.	lbs.	ozs.	
57 Portsmouth 1763	**Saddles,** Q.F., recoil, 6-pr., for recoil carriages for Hotchkiss and Nordenfelt 6-pr., Q.F. guns	—	—	0	4	—	—	—	—	—	—	
	Shafts (single)	0	4	—	—	—	—	—	—	0	1	
	Shafts (framed)	0	8	—	—	—	—	—	—	0	1	
	Sleighs, gun, 12 tons to 38 tons, or 12 tons to 25 tons	18	0	—	—	—	—	—	—	2	4	
	Slides, L., medium No. 11	11	8	—	—	—	—	—	—	1	0	
	,, 12											
	,, 13											
	,, 14	14	8	—	—	—	—	—	—	1	8	
	,, 15	9	0	—	—	—	—	—	—	1	0	
	,, 16	16	0	—	—	—	—	—	—	1	12	
	,, 17											
	,, 18											
	,, 19	11	8	—	—	—	—	—	—	1	0	
	Stages, loading	3	8	0	4	—	—	—	—	0	2	
	Swingletrees	0	2	—	—	—	—	—	—	—	—	
	Trolleys loading, R.M.L. 17·72-inch high angle, 9-inch ...	2	12	—	—	—	—	—	—	0	2	
	Trolleys shell, R.M.L. 17·72-inch	0	12	—	—	—	—	—	—	—	—	
57 I. of Wight 1874	**Trucks,** ballast, 4 ft. 8½ inches gauge	10	0	5	8	—	—	—	—	3	0	
	Turntables, R.M.L. 12·5-inch gun	—	—	—	—	—	—	75	0	—	—	
	Turntables, R.M.L. 10-inch gun	—	—	—	—	—	—	65	0	—	—	
	Wagons, ammunition (without limbers) R.B.L., 40-pr.	9	4	—	—	—	—	—	—	1	4	
	Wagons, ammunition (without limbers) R.M.L. 40-pr.... ...	8	4	—	—	—	—	—	—	1	0	
	Wagons, ammunition (without limbers) R.M.L. 25 ,, ...	7	12	—	—	—	—	—	—	0	12	
	Wagons, platform gun, R.M.L. 6·6-inch ...	15	0	—	—	—	—	—	—	1	8	
	Wagons, platform gyns	18	0	—	—	—	—	—	—	2	0	

Digitized by Google

TABLE H—*continued.*

	Description.	Paint prepared.								Putty.		Remarks.
		Lead Colour.		Magnetic Oxide.		Stone Colour.		Red.				
	Woolwich Store Charge, No. 14—continued.	lbs.	ozs.	lbs.	ozs.	lbs.	ozs.	lbs.	ozs.	lbs.	ozs.	
38407 Equip. 1537	**Wheels** 1st class (5 feet)	1	14	—	—	—	—	—	—	0	3	
	2nd „ (5 feet)	1	8	—	—	—	—	—	—	0	2	
	2nd „ (4 „)	1	3	—	—	—	—	—	—	0	1	
	2nd „ (3 „ 4 inches and 3 feet 6 inches)	1	0	—	—	—	—	—	—	0	1	
30 Artillery 3082	**Spouting,** shell (with trestles) per length of 12 feet.	4	0	—	—	—	—	—	—	0	8	
	Engines, 17·72-inch gun	—	—	12	0	—	—	—	—	—	—	
	Tanks, for engine, 17·72-in. gun	—	—	10	0	—	—	—	—	—	—	

Digitized by Google

(EQ. R.)

Description.	Paint prepared.				Putty.		Remarks.
	Lead Colour.		Magnetic Oxide.				
Woolwich Store Charge, No. 15.	lbs.	ozs.	lbs.	ozs.	lbs.	ozs.	
Barrows ... magazine ... double	1	4	—	—	0	2	
Barrows ... magazine ... single	1	0	—	—	0	2	
Barrows ... magazine lamps	0	8	—	—	0	2	
Barrows ... powder	1	8	—	—	0	4	
Beds, R.M.L. 7-pr., 200 lbs.	1	12	—	—	0	4	
Carriages, mountain, R.M.L. 4-inch jointed howitzer	2	12	—	—	0	4	½ gill of raw linseed oil for side arms to each carriage.
Carriages, mountain, R.M.L. 15-pr.	2	8	—	—	0	4	½ gill of raw linseed oil for side arms to each carriage.
Carriages, mountain, R.M.L. 7 ,, 200 lbs. (without limber)	1	8	—	—	0	4	½ gill of raw linseed oil for side arms to each carriage.
Carriages, mountain, R.M.L. 7 ,, 150 ,, ,,	2	4	—	—	0	4	½ gill of raw linseed oil for side arms to each carriage.
Carriages, mountain, R.M.L. 2·5-inch	2	8	—	—	0	4	½ gill of raw linseed oil for side arms to each carriage.
Limbers, mountain, R.M.L., 7-pr. 200 lbs.	2	8	—	—	0	2	
Woolwich Store Charge, No. 16.							
Carriages, parapet, machine gun	0	8	—	—	—	—	For body of carriage only.†
Skidding, iron (10 feet)	—	—	2	0	—	—	
Skidding, iron (4 ,,)	—	—	1	0	—	—	
Woolwich Store Charge, No. 18.							
Cases, cartridge ... Nos. 1, 2, and 3	3	8	—	—	—	—	For 10 cases.
Cases, cartridge ... ,, 4, 5, 6, 7, and 25	2	8	—	—	—	—	For 10 cases.

† The wheels of the parapet carriage are varnished, for which the following materials are allowed:—
Paper, glass, No. 1½, sheets 2
Varnish, oak, pints ... ... ½
for 4 mountings or less.

57 Gibraltar 5083 38407 Equip. 1537 57 29 3600 M 57 Gibraltar 5083

Digitized by Google

TABLE H.—*continued.*

Description.	Paint prepared.				Putty.		Remarks.
	Lead Colour.		Magnetic Oxide.				
Woolwich Store Charge, No. 19.	lbs.	ozs.	lbs.	ozs.	lbs.	ozs.	
Perches, wagon, ammunition, R.B.L., 9-pr.	0	6	—	—	0	1	
Scotches, recoil	1	0	—	—	0	1	
Woolwich Store Charge, No. 24.							
Bearers, shot, R.B.L., R.M.L., or S.B.	—	—	0	4	—	—	
Garlands ... rectangular 13-inch, 4 ft. 2½ in. ... 4 lengths	—	—	0	8	—	—	
8 ,, 2 ,, 8 ,, ... ,,	—	—	0	4	—	—	
32-pr. 4 ,, 2 ,, ... ,,	—	—	0	8	—	—	
32-pr. 3 ,, 8 ,, ... ,,	—	—	0	7	—	—	
32-pr. 2 ,, 1 ,, ... ,,	—	—	0	4	—	—	
24 ,, 1 ,, 11 ,, ... ,,	—	—	0	3	—	—	
12 ,, 1 ,, 6½ ,, ... ,,	—	—	0	2	—	—	
triangular, 8-inch ... ... 3 lengths	—	—	0	8	—	—	
Woolwich Store Charge, No. 27.							
Packsaddlery, artillery, cradles, R.M.L. 7-pr. (200 and 150 lbs.)	—	—	0	4	—	—	And 2 oz. of copal varnish.
2·5 inch	—	8	—	—	0	1	

Digitized by Google

(Eq. R.)

TABLE J.—Time and Working Pay allowed for Scraping, Cleaning, and Painting the following Articles.

Description.	Scraping and Cleaning.		Painting.			
			Priming, or first Coat.		Stopping, and second Coat.	
	Time.	Amount.	Time.	Amount.	Time.	Amount.
Woolwich Store Charge, No. 2.	H. M.	s. d.	H. M.	s. d.	H. M.	s. d.
57 **Buckets**, water, G.S., leather	0 15	0 0¼	0 15	0 0½	0 15	0 0½
Dover **Drivers**, pile, Swiss	0 30	0 0½	0 40	0 1	0 50	0 1¼
2912 **Mauls**, G.S. Mark III. (for heads only, per dozen, one coat)	...	...	1 45	0 2½	...	...
57 **Posts**, picket ... 8 feet	0 15	0 0¼	0 30	0 0¾	0 30	0 0¾
Jamaica 6 ,, ...						
3657 5 ,, ...	0 10	0 0¼	0 30	0 0¾	0 30	0 0¾
Woolwich Store Charge, No. 4.						
Carts low, projectile	3 0	0 3	3 0	0 4½	4 0	0 6
shot	5 0	0 5	5 0	0 7½	8 0	1 0
sling	6 0	0 6	5 0	0 7½	8 0	1 0
trench	3 0	0 3	3 0	0 4½	4 0	0 6
Drags gun { 25 tons	8 0	0 8	7 0	0 10	9 0	1 1½
gun { 5 ,, ...	6 0	0 6	6 0	0 9	8 0	1 0
large						
medium	4 0	0 4	4 0	0 6	6 0	0 9
small	3 0	0 3	3 0	0 4½	4 0	0 6
Limbers, wagon, sling { 12 tons	3 0	0 3	3 0	0 4½	3 30	0 5¼
M 2 7 ,, ...						
6 ,, ...	3 0	0 3	2 30	0 3¾	3 30	0 5¼
Wagons, sling (without limber) { 12 tons	9 0	0 9	7 0	0 10½	10 30	1 3¾
7 ,, ...	7 0	0 7	7 0	0 10½	8 30	1 0½
6 ,, ...	7 0	0 7	5 30	0 8¼	8 30	1 0½

Digitized by Google

TABLE J.—*continued.*

	Description.	Scraping and Cleaning.		Painting.			
				Priming, or first Coat.		Stopping, and second Coat.	
		Time.	Amount.	Time.	Amount.	Time.	Amount.
		H. M.	s. d.	H. M.	s. d.	H. M.	s. d.
38407	*Woolwich Store Charge, No.* 10.						
Equip.	**Apparatus**, lifting guns { hydraulic	0 45	0 $0\frac{3}{4}$	0 40	0 1	0 40	0 1
1537	{ Hurst pattern	16 0	1 4	12 0	1 6	18 0	2 3
	Crabs, hoisting guns { 50 tons	10 0	0 10	6 0	0 9	8 0	1 0
	{ 25 ,, ...	8 0	0 8	4 0	0 6	6 0	0 9
	Frames ... { cover, ordnance, large ($16\frac{1}{2}$ ft. × 8 ft.)	2 30	0 $2\frac{1}{2}$	2 0	0 3	2 15	0 $3\frac{1}{4}$
	{ iron roller... { one-horse	7 0	0 7	5 0	0 $7\frac{1}{2}$	7 0	0 $10\frac{1}{2}$
	{ { two ,, ...	8 30	0 $8\frac{1}{2}$	6 15	0 $9\frac{3}{4}$	8 30	1 $0\frac{3}{4}$
	{ store, hydraulic jack	1 30	0 $1\frac{1}{2}$	1 15	0 $1\frac{3}{4}$	1 30	0 $2\frac{1}{4}$
	Jacks, lifting { hydraulic, general service { 30 tons	0 30	0 $0\frac{1}{2}$	0 30	0 $0\frac{3}{4}$	0 30	0 $0\frac{3}{4}$
	{ { { 20 ,, ...	0 20	0 $0\frac{1}{2}$	0 20	0 $0\frac{3}{4}$	0 20	0 $0\frac{3}{4}$
	{ { { 10 ,, ...	0 20	0 $0\frac{1}{2}$	0 20	0 $0\frac{3}{4}$	0 20	0 $0\frac{3}{4}$
	{ { hydraulic, Tangye's { $22\frac{1}{2}$ tons	0 30	0 $0\frac{1}{2}$	0 20	0 $0\frac{1}{2}$	0 20	0 $0\frac{1}{2}$
	{ { { 15 ,, ...	0 30	0 $0\frac{1}{2}$	0 30	0 $0\frac{3}{4}$	0 30	0 $0\frac{3}{4}$
	{ { { $7\frac{1}{2}$,, ...						
	{ { screw, Clerk's						
	Magazines, portable	1 30	0 $1\frac{1}{2}$	1 30	0 $2\frac{1}{4}$	2 0	0 3
30	*Woolwich Store Charge, No.* 12.						
Artillery	**Spars**, steel sheers, length 45 feet, mean circumference $35\frac{1}{4}$ inches						
3682	(2 to a set)... ... ... set	12 0	1 0	10 30	1 $3\frac{3}{4}$	10 30	1 $5\frac{3}{4}$
	Shoes for ditto, 2 ft. 6 in. square						
	Timber, spars for sheers, 70 ft. (2 to a set) ... ... set	10 0	0 10	13 0	1 $7\frac{1}{2}$	16 0	2 0
	Woolwich Store Charge, No. 13.						
	Bars, splinter, limber, field, R.B.L. 20-pr.	0 15	0 $0\frac{1}{4}$	0 10	0 $0\frac{1}{4}$	0 15	0 $0\frac{3}{8}$
	Carriages, field (without limber, B.L. { 15-pr.	7 30	0 $7\frac{1}{2}$	5 0	0 $7\frac{1}{2}$	6 30	0 $9\frac{3}{4}$
	{ { 12 ,, ...						

Digitized by Google

| | | |

TABLE J.—*continued.*

	Description.	Scraping and Cleaning.		Painting.			
				Priming, or first Coat.		Stopping, and second Coat.	
		Time.	Amount.	Time.	Amount.	Time.	Amount.
		H. M.	s. d.	H. M.	s. d.	H. M.	s. d.
	Woolwich Store Charge, No. 14.						
	Axletrees, transporting (including the wheels) — bed, howitzer, R.M.L.	1 30	0 1½	2 0	0 3	2 30	0 3¾
	Axletrees, transporting (including the wheels) — slides, L, R.M.L. 11-inch (also 12-inch 25 tons)						
	Axletrees, transporting (including the wheels) — slides, L, R.M.L. 10 ,,						
	Axletrees, transporting (including the wheels) — slides, L, R.M.L. 9 ,,						
	Axletrees, transporting (including the wheels) — slides, L, R.M.L. 7 ,,						
	Axletrees, transporting (including the wheels) — slides, L, medium, wood	1 0	0 1	1 30	0 2¼	2 0	0 3
	Barrows, projectile — Nos. 1 to 6	0 30	0 0½	1 30	0 2¼	1 30	0 2½
	Barrows, projectile — Nos. 10 and 11	0 30	0 0½	1 0	0 1½	1 15	0 2
	Barrows, projectile — road	3 0	0 3	2 15	0 3½	2 30	0 3¾
	Barrows, projectile — shingle	3 30	0 3½	3 0	0 4½	3 30	0 5¼
	Bars, splinter, limber, siege, wood	0 15	0 0¼	0 10	0 1¼	0 15	0 2
	Beds, howitzer, R.M.L.	7 30	0 7¼	6 30	0 9¼	7 0	0 10½
	Buckets, sponge, garrison	0 15	0 0¼	0 15	0 1½	0 15	0 2
	Capstans, crab	1 30	0 1¾	1 30	0 2¼	2 0	0 3
	Carriages, R.M.L. 25-pr., with top over bank	10 45	0 10¾	7 0	0 10½	9 15	1 1¾
	Carriages, garrison — common, rear chock, sliding, and sliding medium (wood)	5 0	0 5	3 0	0 4½	4 0	0 6
	Carriages, garrison — R.M.L. 64-pr. 58 cwt., depression, iron	3 0	0 3	3 0	0 4½	3 0	0 4½
	Carriages, garrison — S.B. 32-pr. to 6-pr. (cast iron)	3 0	0 3	3 0	0 4½	3 0	0 4½
	Carriages, garrison — sliding, medium — No. 2						
	Carriages, garrison — sliding, medium — ,, 3						
	Carriages, garrison — sliding, medium — ,, 10						
	Carriages, garrison — sliding, medium — ,, 11						
	Carriages, garrison — sliding, medium — ,, 12						
	Carriages, garrison — sliding, medium — ,, 13	5 0	0 5	4 0	0 6	4 30	0 6¾
	Carriages, garrison, Q.F. — 4·7 inch, with shield and pivot plate	7 0	0 7	8 30	1 0¾	9 0	1 1½
	Carriages, garrison, Q.F. — 12-pr., with shield and pedestal	5 0	0 5	6 0	0 9	6 0	0 9
	Carriages, garrison, Q.F. — 6-pr. recoil embrasure and cone	1 30	0 1½	2 0	0 3	2 0	0 3

38407 Equip. 1537 — 57 Dover — 2912 — 38407 Equipment 1537 — 57 Colchester 3301

Digitized by Google

	Carriages	R.B.L. 40-pr.	6 ft. parapet	12	0	1	0	8	0	1	0	10	0	1	3
			wood	10	0	0	10	6	0	0	9	7	30	0	11¼
		siege (without limber)	8-inch, 70 cwt., howitzer												
			8 „ 40 „ „												
			6·6-inch gun	9	15	0	9½	6	15	0	9⅜	7	45	0	11⅝
			R.M.L. 6·6 „ howitzer ...												
			6·3 „ „ ...												
			64-pr.	8	45	0	8¾	6	15	0	9⅜	7	45	0	11⅛
			40 „ with top over bank ...	11	45	0	11¼	8	45	1	1⅛	10	45	1	4⅛
		travelling, B.L. (without limber)	5-inch, 6 ft. parapet ...	10	45	0	10¾	8	15	1	0⅜	10	15	1	3⅜
			4 „ „ „ ...												
		transporting guns up inclines (12·5-inch)		10	0	0	10	7	0	0	10½	9	0	1	1½
57	**Chain,** ammunition, lift			18	0	1	6	15	0	1	10½	14	15	1	9½
Portsmouth	**Cones,** Q.F., recoil 6-pr. for recoil carriage for Hotchkiss and Nordenfelt 6-pr. Q.F. gun			1	0	0	1	1	0	0	1½	1	0	0	1½
2715	**Gear** for landing heavy guns at sea forts	chain*		160	0	13	4	—		—		—		—	
38407		remaining gear ...		4	0	5	4	64	0	8	0	64	0	8	0
Equip.	**Gear,** loading, and apparatus washing out, 10·4-inch R.M.L. ...				0	0	9	6	0	0	9	8	0	1	0
1537	**Gyns**	Gibraltar				0	4	3	0	0	4½	4	0	0	6
57		heavy, hydraulic				0	4	5	0	0	7½	5	15	0	8
Portsmouth		triangle, heavy	tubular ...		0	0	9	6	0	0	9	8	30	1	0¾
1763			wood ...												
...		triangle, with appurtenances, light	tubular ...	7	0	0	7	5	0	0	7½	7	0	0	10½
1537			wood ...												
			16 feet	6	0	0	6	4	30	0	6¾	6	0	0	9
	Limbers	field, R.M.L., 25-pr.		7	15	0	7¼	4	30	0	6¾	5	45	0	8⅛
		siege	B.L., 40-pr.	5-inch 6-feet parapet... ...	7	15	0	7¼	3	45	0	5⅝	5	15	0	7⅞
				4 „ 6 „ „												
			R.B.L., 40-pr.	iron	6	0	0	6	4	0	0	6	5	30	0	8¼
				wood												
			R.M.L.	8-inch, 70 cwt., howitzer... ...	7	15	0	7½	3	45	0	5⅝	5	15	0	7⅞
				8 „ 46 „ „												
				6·6-inch gun												
				howitzer...												
				6·3 „ howitzer												
				64-pr.												
				40 „												
		transporting	bed, howitzer, R.M.L.... ...	6	30	0	6½	4	0	0	6	5	0	0	7⅜
			slide L.	iron...	5	0	0	5	5	0	0	7½	7	0	0	10½
				medium	3	0	0	3	3	0	0	4½	5	0	0	7⅛
	Pivots, 10·4-inch, R.M.L.			2	0	0	2	1	30	0	2¼	1	30	0	2¼

* The following are allowed for greasing:—Time, 32 hours; amount, 2*s.* 8*d.*

Digitized by Google

TABLE J.—*continued.*

Description.	Scraping and Cleaning.		Painting.			
			Priming, or First coat.		Stopping, and second coat.	
	Time.	Amount.	Time.	Amount.	Time.	Amount.
Woolwich Store Charge, No. 14—continued.	H. M.	*s. d.*	H. M.	*s. d.*	H. M.	*s. d.*
Platforms ... ground { for slide L. medium No. 15	4 0	0 4	4 0	0 6	6 0	0 9
ground { R.M.L. howitzer beds ... ... }	8 0	0 8	8 0	1 0	13 0	1 7½
57– Gen.No. 3350 siege { Clerk's	6 0	0 6	5 30	0 8½	8 0	1 0*
siege { double decked, "C" pivot (complete, with pivot plate, &c.)	4 0	0 4	4 0	0 6	7 0	0 10½
38407—E. 1537 **Pumps,** gyn, hydraulic	2 30	0 2½	3 30	0 5½	3 30	0 5½
Saddle, Q.F. recoil 6-pr. for recoil carriages for Hotchkiss and Nordenfelt 6-pr. Q.F. guns	0 45	0 0¾	1 0	0 1½	1 0	0 1½
57—Ports. 1763 **Shafts** ... ... { (single)	0 15	0 0½	0 15	0 0¾	0 15	0 0¾
{ (framed)	0 15	0 0½	0 10	0 0½	0 15	0 0¾
Sleighs, gun, 12 tons to 38 tons, *or* 12 tons to 25 tons	0 30	0 0½	0 20	0 0½	0 30	0 0¾
Slides, L., medium ... ... { No. 11	7 0	0 7	4 30	0 6¾	6 0	0 9
,, 12						
,, 13						
,, 14						
,, 15						
,, 16						
,, 17						
,, 18						
,, 19						
Stages, loading	2 0	0 2	3 0	0 4½	4 0	0 6
Swingletrees	0 5	0 0⅓	0 5	0 0¾	0 5	0 0¾
Trolleys { loading, R.M.L. { 17·72-inch	3 30	0 3½	4 0	0 6	4 15	0 6¼
{ loading, R.M.L. { high angle, 9-inch	1 0	0 1	1 30	0 2¼	1 30	0 2¼
{ shell, R.M.L., 17·72-inch...	1 0	0 1	1 0	0 1½	1 0	0 1½
Trucks, ballast, 4 ft, 8½ in. gauge...	14 30	1 2½	12 30	1 6¾	15 30	1 11¼

Digitized by Google

I. of Wight 874	**Turntables**, R.M.L.	12·5-inch gun	120	0	10	0	60	0	7	6	60	0	7	6
		10-inch gun	108	0	9	0	56	0	7	0	56	0	7	0
	Wagons ammunition	R.B.L., 40-pr.	10	30	0	$10\frac{1}{2}$	6	0	0	9	8	0	1	0
		R.M.L. 40 ,, ...	9	15	0	$9\frac{1}{4}$	6	15	0	$9\frac{3}{8}$	8	15	1	$0\frac{3}{8}$
		R.M.L. 25 ,, ...	9	15	0	$9\frac{1}{4}$	5	30	0	$8\frac{1}{4}$	7	45	0	$11\frac{3}{8}$
	platform	gun, R.M.L. 6·6-inch	15	0	1	3	8	0	1	0	10	0	1	3
		gyns	16	0	1	4	8	30	1	$0\frac{3}{4}$	11	0	1	$4\frac{1}{2}$
	Wheels 1st class (5 feet)	... ...	0	40	0	$0\frac{3}{8}$	0	55	0	$1\frac{3}{8}$	1	10	0	$1\frac{7}{8}$
	2nd ,,	(5 feet)	0	40	0	$0\frac{3}{8}$	0	50	0	$1\frac{1}{4}$	1	0	0	$1\frac{3}{8}$
38407		(4 ,,)...	0	30	0	$0\frac{1}{2}$	0	45	0	$1\frac{1}{8}$	0	50	0	$1\frac{1}{4}$
Equipment 1537		(3 ,, 4 inches and 3 feet 6 inches)	0	25	0	$0\frac{5}{16}$	0	40	0	1	0	45	0	$1\frac{1}{8}$
	Spouting, shell (with trestles) per length of 12 feet		1	0	0	1	1	0	0	$1\frac{1}{2}$	1	0	0	$1\frac{1}{2}$
	Engines, 17·72-inch gun		14	0	1	2	7	0	0	$10\frac{1}{2}$	7	0	0	$10\frac{1}{2}$
	Tanks for engine, 17·72-inch gun		12	0	1	0	6	0	0	9	6	0	0	9
	Woolwich Store Charge, No. 15.													
	Barrows ... magazine	double...	1	0	0	1	1	30	0	$1\frac{1}{2}$	2	0	0	3
		single	1	0	0	1	1	0	0	$1\frac{1}{2}$	1	30	0	$2\frac{1}{4}$
	magazine lamps		—		—		2	0	0	3	2	0	0	3
	powder		1	30	0	$1\frac{1}{2}$	1	30	0	$2\frac{1}{4}$	2	0	0	3
	Beds, R.M.L. 7-pr. 200 lbs.		2	0	0	2	1	30	0	$2\frac{1}{4}$	2	0	0	3
	Carriages, mountain, R.M.L. 4-inch howitzer		3	30	0	$3\frac{1}{2}$	3	30	0	$5\frac{1}{4}$	3	0	0	$6\frac{3}{4}$
	15-pr.		3	0	0	3	3	0	0	$4\frac{1}{2}$	4	0	0	6
	7-pr. 200 lbs. (without limber)		1	30	0	$1\frac{1}{2}$	1	30	0	$2\frac{1}{4}$	2	0	0	3
	7-pr. 150 lbs.		3	0	0	3	3	0	0	$4\frac{1}{2}$	4	0	0	6
	2·5-inch		3	30	0	$3\frac{1}{2}$	3	30	0	$5\frac{1}{4}$	4	0	0	6
	Limbers, mountain R.M.L. 7-pr. 200 lbs.													
	Woolwich Store Charge, No. 16.													
	Carriages, parápet, machine gun		1	0	0	1	1	30	0	$2\frac{1}{4}$	1	30	0	$2\frac{1}{4}$
	Skidding, iron (10 feet)		1	0	0	1	0	30	—		0	30	0	$1\frac{1}{2}$ †
	(4 ,,)		0	30	0	$0\frac{1}{2}$	0	15	—		0	15	0	$0\frac{3}{4}$ †
	Woolwich Store Charge, No. 18.													
38407—E. 1537	**Cases**, cartridge‡ Nos. 1, 2 and 3		3	0	0	3	3	0	0	$4\frac{1}{2}$	3	0	0	$4\frac{1}{2}$
	,, 4, 5, 6, 7 and 25		2	0	0	2	2	0	0	3	2	0	0	3

* When fixed in position. † Working pay for two coats. ‡ For 10 cases.

Digitized by Google

TABLE J.—*continued.*

Description.	Scraping and Cleaning.		Painting.			
			Priming, or first Coat.		Stopping, and second Coat,	
	Time.	Amount.	Time.	Amount.	Time.	Amount.
Woolwich Store Charge, No. 19.	H. M.	*s. d.*	H. M.	*s. d.*	H. M.	*s. d.*
Perches, wagon, ammunition R.B.L. 9-pr.	0 20	0 0½	0 15	0 0¾	0 20	0 0¾
Scotches, recoil	0 30	0 0½	0 30	0 0¾	0 40	0 1
Woolwich Store Charge, No. 20.						
Cases, powder, metal-lined, whole (for 100 cases)	10 0	0 10	20 0	2 6	20 0	2 6
Woolwich Store Charge, No. 24.						
Bearers, shot, R.B.L., R.M.L., and S.B.	—	—	0 15	0 0½	0 15	0 0½
Garlands. 13-inch, 4 ft. 2½ in. ... ... 4 lengths	1 0	0 1	0 30	—	0 30	0 1½ *
8 ,, 2 ,, 8 ,, ... ,,	0 30	0 0½	0 15	—	0 15	0 0¾ *
rectangular 32-pr. 4 ,, 2 ,, ... ,,	1 0	0 1	0 30	—	0 30	0 1½ *
rectangular 32-pr. 3 ,, 8 ,, ... ,,	0 45	0 0¾	0 20	—	0 20	0 1 *
rectangular 32-pr. 2 ,, 1 ,, ... ,,	0 30	0 0½	0 15	—	0 15	0 0¾ *
24 ,, 1 ,, 11 ,, ... ,,	0 20	0 0½	0 10	—	0 10	0 0¾ *
12 ,, 1 ,, 6½ ,, ... ,,						
triangular, 8-inch, 4 ft. 6¼ in. ... ... 3 lengths	1 30	0 1½	0 30	—	0 30	0 1½ *
Woolwich Store Charge, No. 27.						
Packsaddlery, artillery, cradles. R.M.L. 7-pr. (200 and 150 lbs.) ...	0 15	0 0½	0 30	0 0¾	0 30	0 0¾
Packsaddlery, artillery, cradles. R.M.L. 2·5-inch	0 20	0 0½	0 30	0 0¾	0 35	0 1

* Working pay for two coats.

Digitized by Google

TABLE K.

The following Table shows the times allowed, and the working pay to be paid for scraping, cleaning, and painting all natures of Projectiles, and also the quantities of Paint required for painting 100 of each description of Projectile:—

Natures.		Unpiling, scraping, and cleaning in 10 hours.		Painting one coat (without piling) in 10 hours.		Piling in 10 hours.		Quantity of Paint per 100, for one coat.
		No.	Amount per 100.	No.	Amount per 100.	No.	Amount per 100.	
			s. d.		s. d.		s. d.	lbs. ozs.
Shell and Shot, B.L. or Q.F.	13·5-inch	6	13 10¾	25	5 0	36	2 6	33 0
	12 ,,	8	10 5	33	3 9	40	2 1	20 0
	10 ,,	10	8 4	50	2 6	50	1 8	16 0
	9·2 ,,	12	6 11½	50	2 6	50	1 8	11 0
	8 ,,	16	5 2½	60	2 0	63	1 4	9 0
	6 ,,	30	2 9½	120	1 1	167	0 6	6 0
	5 ,, also 4·7-inch	40	2 1	125	1 0	167	0 6	5 0
	4 ,,	50	1 8	150	0 10	250	0 4	4 0
	12-pr.	60	1 4¾	200	0 7½	334	0 3	3 0
	common, Shrapnel, Palliser, and case 17·72-inch	4	20 10	20	6 3	40	2 0	36 8
	common, Shrapnel, Palliser, and case 16 ,,	7	11 11	30	4 2	50	1 8	22 0
Shell and Shot, R M.L.	12-inch	8	10 5	33	3 9	50	1 8	20 0
	11 ,,	10	8 4	42	3 0	60	1 5	15 0
	common, Shrapnel, and Palliser 10·4 ,, (also case)	12	6 11½	50	2 6	60	1 5	12 8
	10 ,,	15	5 6¾	60	2 0	80	1 0½	10 0
	9 ,,	18	4 7½	72	1 10	100	0 10	9 0
	8 ,,	25	3 4	100	1 3	140	0 7¼	8 0
	7 ,,	30	2 9½	120	1 1	150	0 6¾	6 0
	6·6 ,, (also case)							

Digitized by Google

TABLE K.—*continued.*

Nature.			Unpiling, scraping, and cleaning in 10 hours.		Painting one coat (without piling) in 10 hours.		Piling in 10 hours.		Quantity of Paint per 100, for one coat.
			No.	Amount per 100.	No.	Amount per 100.	No.	Amount per 100.	
				s. d.		s. d.		s. d.	lbs. ozs.
Shell and Shot, R.M.L.	common, Shrapnel, and case	6·3-inch, 80-pr. and 64-pr. ...	35	2 $4\frac{3}{4}$	125	1 0	150	0 $6\frac{3}{4}$	5 8
		40-pr. (also R.B.L. case)... ...	40	2 0	150	0 10	240	0 $4\frac{1}{4}$	4 0
		25-pr., 16-pr., and 4-in. howitzer (also R.B.L. case 20-pr.)	50	1 8	175	0 $8\frac{1}{2}$	300	0 $3\frac{1}{2}$	3 0
		15-pr., 13-pr., 9-pr., and 7-pr. (also R.B.L. case 12-pr. and 9-pr.)	60	1 $4\frac{3}{4}$	200	0 $7\frac{1}{2}$	300	0 $3\frac{1}{2}$	2 0
	2·5 inch		80	1 $0\frac{1}{2}$	200	0 $7\frac{1}{2}$	350	0 3	1 8
	double ...	7-inch	20	4 2	100	1 3	120	0 8	9 0
		7-pr.	40	2 1	200	0 $7\frac{1}{2}$	350	0 3	2 8
	case ...	12-inch	15	5 $6\frac{3}{4}$	50	2 6	50	1 8	10 0
		11 ,, ...	17	4 11	60	2 0	60	1 5	7 8
		10 ,, ...	20	4 2	75	1 8	60	1 5	6 4
		9 ,, ...	25	3 4	100	1 3	80	1 $0\frac{1}{2}$	5 0
		8 ,, ...	27	3 1	110	1 $1\frac{1}{2}$	100	0 10	4 8
		7 ,, ...	30	2 $9\frac{1}{2}$	125	1 0	140	0 $7\frac{1}{4}$	4 0
Shell, shot, and carcasses, S.B.		8-inch or 68-pr.	55	1 $6\frac{3}{4}$	125	1 0	230	0 $4\frac{1}{2}$	3 10
		32-pr.	80	1 $0\frac{1}{2}$	150	0 10	300	0 $3\frac{1}{2}$	2 6
		24 ,, ...	90	0 11	190	0 8	360	0 $2\frac{1}{4}$	2 0
		12 ,, ...	110	0 9	400	0 $3\frac{1}{4}$	600	0 $1\frac{3}{4}$	1 0
Shells, R.B.L., common, segment, and Shrapnel ...		7-inch	60	1 $4\frac{3}{4}$	175	0 $8\frac{1}{2}$	140	0 $7\frac{1}{4}$	3 0
		40-pr.	80	1 $0\frac{1}{2}$	225	0 $6\frac{1}{2}$	240	0 4	2 8
		20 ,, ...	100	0 10	300	0 5	300	0 $3\frac{1}{2}$	2 0
		12 ,, ...	120	0 $8\frac{1}{2}$	300	0 5	500	0 2	2 0
		9 ,, ...							
Shot, S.B.B.L., case, 32-pr.			30	2 $9\frac{1}{2}$	350	0 $4\frac{1}{2}$	350	0 3	5 8

57
Gen. No.
6387

Digitized by Google

TABLE K.—*continued.*

Nature.	Quantity of Paint per 100.										Painting in 10 hours either operation.*	
	Red ring.		White ring.		Red tip.		White tip.		White and yellow rings over body.		Red stars on star shell.	Blue tip.	No.	Amount per 100.
	lbs.	ozs.	lbs.	ozs.	lbs.	ozs.	lbs.	ozs.	lbs.	ozs.	lbs. ozs.	lbs. ozs.		s. d.
13·5-inch and 12-inch	3	0	2	0	5	0	2	8	3	8	—	—	75	1 8
10-inch and 9·2-inch	2	12	1	8	4	8	2	4	3	0	—	—	83	1 6½
Shell and 8-inch	2	4	1	0	4	0	2	0	2	8	—	—	112	1 1½
Shot, B.L. 6-inch and 5-inch	2	4	1	0	4	0	2	0	2	8	—	4 0	150	0 10
and Q.F. 4-inch	1	12	0	12	3	0	1	8	2	0	1½ white, 1 red	3 0	225	0 6¾
12-pr.	1	12	0	12	3	0	1	8	2	0		3 0	300	0 5
6-pr. and 3-pr.	1	0	0	8	—		—		1	0	—	—	375	0 4
7-inch	2	4	—		4	0	—		2	8	—	4 0	150	0 10
Shell, 40-pr. and 20-pr.	1	12	—		3	0	—		1	8	—	3 0	225	0 6¾
R.B.L. 12-pr. and 9-pr.	1	4	—		2	0	—		1	0	—	2 0	300	0 5
17 72-inch and 16-inch...	3	0	2	0	5	0	2	8	3	8	—	—	46	2 9½
12·5-inch and 12-inch	3	0	2	0	5	0	2	8	3	8	—	—	75	1 8
11-inch	3	0	2	0	5	0	2	8	3	8	—	—	83	1 6½
10·4-inch and 10-inch	2	12	1	8	4	8	2	4	3	0	—	—	83	1 6½
Shell and 9-inch	2	12	1	8	4	8	2	4	3	0	—	—	112	1 1½
Shot, 7 ,, ...														
R.M.L. 6·6-inch and 6·3-inch	2	4	1	0	4	0	2	0	2	8	—	—	150	0 10
80 pr. and 64-pr.														
40-pr., 25-pr., and 4-inch howitzer ...	1	12	0	12	3	0	1	8	2	0	—	—	225	0 6¾
16-pr. to 2·5-inch	1	12	0	12	3	0	1	8	2	0	1½ white, 1 red	3 0	300	0 5

* *See* paragraph 686 as to painting rings and tips.

Digitized by Google

TABLE L.

57 Dover 2539

The following Table shows the quantities of paint, time, and working pay allowed for re-lubricating, re-painting and removing G.S., and R.B.L. Field Service fuze-hole plugs of filled Shells, as directed in paragraph 683:—

Natures.	No. per hour.	Amount per 100.	Quantity of Paint allowed.	Remarks.
		s. *d.*	lbs. ozs.	
R.B.L. 7-inch	50	0 3	1 0	
R.B.L. 40-pr. and under ...	40	0 3½	1 0	
R.M.L. 64-pr. **B.L.**, 6-inch and upwards...	50	0 3	1 0	
R.M.L., 40-pr. **B.L.**, 5-inch and under ...	40	0 3½	1 0	

Group Symbols and Manning Boards.

57 Devonport 5000

	Paint.	Rate of working-pay for painting.
Group symbols, and manning boards for Assembly parades	Description and quantities as required. *See* paragraph 219A and 231.	1½*d.* per hour, unless a skilled artificer, of whose craft painting forms a part, is necessarily employed, in which case the rate may be 2*d.*

Digitized by Google

LIST OF APPENDICES.

		PAGE.
I.	Lists of Stores for Mounting, Dismounting and Moving Guns....	186
II.	Arrangement of Stores in Works	206
III.	Depression Range Finders	208
IV.	Stores for Laboratory Instruction	228
V.	Materials allowed for Packing Hydraulic Buffers	229
VI.	Traversing Racks, Traversing Arcs and Pointers	230
VII.	Table of Racers, Pivot Blocks and Pivot Plugs	232
VIII.	Tools for Venting and Repairing R.B.L., R.M.L. and S.B. Ordnance	238
IX.	Chests, Tool, Filled	247
X.	Stores for Instruction in Position Finding....	275
XI.	Spanners and Special Implements for Mountings.... ...	278
XII.	Instructions for Repriming and Rebridging Vent-Sealing Electric Drill Tubes	293

Digitized by Google

APPENDIX I.

LISTS OF STORES FOR MOUNTING, DISMOUNTING AND MOVING, &c., GUNS OF 18 TO 100 TONS.

Referred to in paragraph 96, *Part* 2.

CONTENTS.

NO. OF LIST.	SUBJECT.		PAGE.
1.	Transporting by Trolley on Rails	18 to 47 tons.	187
2.	Transporting by Special Carriage on Rails up Incline		188
3.	Transporting by Sleigh		189
4.	Transporting by Parbuckling		191
5.	Mounting and Dismounting in Open Battery or "C" Emplacement		193
6.	Mounting and Dismounting by Box Beam		194
7.	Mounting and Dismounting in Casemates		195
8.	Mounting and Dismounting by Box Beam (suspended from Roof of Casemate)		196
9.	Mounting and Dismounting in Low-roofed Casemates		197
10.	Embarking, Disembarking, &c., by Heavy Sheers		198
11.	Gear for Landing Heavy Ordnance at Iron-clad Forts		201
12.	Mounting and Dismounting by Yeatman Tackle, 18 to 25 tons		202
13.	Mounting and Dismounting on Small Port Carriages, 38 tons		203
14.	Gear for Landing Carriages, Slides, &c., at Sea Forts		204
15.	Gear for Landing, Transporting, &c., 17·72-inch R.M.L. Guns, 100 tons		204
	Distribution List of Stores and Gear		205

Digitized by Google

Appendix I.—*continued.*

Transporting by Trolley on Rails—18 to 47 tons.

LIST No. 1.

Name of Store.	No. required.	For what purpose.	Remarks.
Woolwich Store Charge, No. 4.			
Trucks, railway, gun	1	General purposes...	According to weight of gun.
Woolwich Store Charge, No. 11.			
Grease, Field's* (in pot) lbs.	2		
Woolwich Store Charge, No. 14.			
Handspikes, common, 7 ft. ...	6	General purposes.	
Woolwich Store Charge, No. 18.			
Ropes, parbuckling, 18 fms., 6-in.	2	General purposes.	
Woolwich Store Charge, No. 19.			
Planks, moving guns, half, 6 ft. × 12 in.	6	General purposes.	
Scotches, large	20		
Skids { 6 ft. × 12 in. square ...	1		
{ 3 ft. × 9 in. × 6 in. ...	1		

* Price's composite grease will be used in place of Field's grease at all foreign stations except British North America and St. Lucia.

N.B.—One winch or crab capstan and a tackle may be required if on an incline.

Digitized by Google

Appendix I.—*continued.*

Transporting by Special Wrought Iron Carriage on Rails up Incline—18 to 47 tons.

LIST No. 2.

Name of Store.	No. required.	For what purpose.	Remarks.
Woolwich Store Charge, No. 2.			
Mauls, iron-hooped ... } **Posts**, picket, 8 feet ... }	...	For general purposes.	As required.
Woolwich Store Charge, No. 10.			
Chain, iron, cable, 1 in.	4	For main chains ...	12½ fm. lengths.
Crabs, hoisting guns 50 tons ...	4	For hauling, viz., 2 half-way, and 2 at top of incline	
25 ,, ...	4	For hauling in slack of chain.	
Frames, crab, hoisting guns ... ... 50 tons ...	4	Use with crabs.	
25 ,, ...	4		
Woolwich Store Charge, No. 14.			
Carriages, wrought iron, transporting	1	For carrying guns	Special.
Holdfasts	...	For general purposes	As required.
Woolwich Store Charge, No. 18.			
Blocks, iron, snatch	6	2 for main chains 2 at crabs half-way 2 at top of incline	Special for 1-in. chain.
Cordage, hawser, 3-strand, tarred, 9-inch ... ... coils	2	For brake-check rope.	
Lashings, tarred, 2½-in. *and* 1½-in.	...	For General purposes	As required.

Digitized by Google

Appendix I.—*continued.*

Transporting by Sleigh—18 to 47 tons.

LIST No. 3.

Name of Store.	No. required.	For what purpose.	Remarks.
Woolwich Store Charge, No. 2.			
Drivers, pile, Swiss	2		
Mauls, iron-hooped...	6		
Posts, picket { 8 feet	9	Holdfast f level.	On an incline, sunken holdfasts may be necessary
Posts, picket { 5 ,, ...	12	Holdfast f level.	On an incline, sunken holdfasts may be necessary
Woolwich Store Charge, No. 10.			
Crabs, hoisting guns, 50 tons, *or* 25 tons	2	For inclines ...	As required.
Frames, crab, hoisting guns, 50 tons, *or* 25 tons	2	Use with crabs.	
Jacks, lifting, hydraulic, Tangye's, 7½ tons, 15 tons, *or* 22½ tons*	2	... ...	As required.
Woolwich Store Charge, No. 14.			
Capstans, crab	2	For level.	
Handspikes, common, 7 ft. ...	12		
Levers, 14 feet	2		
Sleighs, gun, 12 tons to 45 tons...	1	Roadway and general purposes.	
Woolwich Store Charge, No. 18.			
Blocks, wood { Both-way { single, 18-inch	2	Check rope and motive power.	
Blocks, wood { Both-way { double, 18-inch	2	Check rope and motive power.	
Blocks, wood { Both-way { treble, 18-inch	2	Check rope and motive power.	
Blocks, wood { snatch, 18-inch ...	2	Check rope and motive power.	
Cordage { hawser, 3 strand, white, 6-inch (coils of 113 fathoms)	2		
Cordage { tarred, spun yarn, hemp, 3-thread lbs.	4		
Gyns, triangle { heavy { slings, gun, 16 ft.	1	Attached to gun.	
Gyns, triangle { heavy { thimbles, sling, 16 ft.	1	Attached to gun.	
Gyns, triangle { 16 feet, slings	4	Standing end of tackles, &c.	
Lashings, tarred, 2½-inch, 5 fms.	12		
Ropes, drag, heavy	6		
Selvagees, ordinary	6		

* These jacks will be replaced by G.S. jacks of 10 tons, 20 tons, and 30 tons respectively as the present stock becomes used up. The 30-ton jack should be used with guns over 45 tons.

Digitized by Google

Appendix I.—*continued.*

LIST No. 3—*continued.*

Name of Store.	No. required.	For what purpose.	Remarks.
Woolwich Store Charge, No. 19.			
Planks, moving guns.* half, 4 ft. × 12 in. ...	6		
whole, 10 ft. × 17 in (fir)	15	For roadway.	
whole, 10 ft. × 17 in (oak)	4	For roadway.	
Rollers, ground 7 ft. × 12 in. diameter...	4	For travelling.	
6 ft. × 10 in. „ †...	6	For placing sleigh under gun.	
2 ft. × 8 in. „	4	For shifting sleigh.	
Scotches large	20		
large, handled ...	6	For following up incline.	
Skids* 6 ft. × 12 in. square ...	6	Roadway and general purposes.	
4 ft. × 12 in. „ ...	6		
5 ft. × 6 in. × 5 in.... ...	2		
3 ft. × 9 in. × 6 in.... ...	6		
3 ft. × 6 in. × 5 in.... ...	6		
3 ft. × 6 in. × 3 in.... ...	6		
Wedges oak, 18-inch	6	For passing from one skid to another when not exactly of same level.	18 in. × 12 in. × 2½ in.

* The estimate for planks and skids is merely approximate, it must vary with the nature of the operation.

† The 6-ft. × 10-in. rollers are only required when the gangway is too narrow to use the longer rollers, or for transporting carriages and slides.

Digitized by Google

Appendix I.—*continued.*

Transporting by Parbuckling—18 to 47 tons.

LIST No. 4.

Name of Store.	No. required.	For what purpose.	Remarks.
Woolwich Store Charge, No. 2.			
Drivers, pile, Swiss	2		
Mauls, iron-hooped	6		
Posts, picket ... { 8-feet ... ... / 5 ,, ...	9 / 12	Holdfasts.	
Woolwich Store Charge, No. 10.			
Jacks, lifting, hydraulic, Tangye's, 7½ tons, 15 tons, *or* 22½ tons*	1	... ...	As required.
Plates, moving guns	2	For placing over skids to ease moving forward the muzzle.	For 35-ton guns and upwards.
Woolwich Store Charge, No. 11.			
Grease, Field's† (in pot) ... lbs.	2		
Woolwich Store Charge, No. 14.			
Buckets, sponge, garrison ...	1		
Capstans, crab	2		
Handspikes, common, 7-feet ...	8		
Levers, 14-feet	3		
Woolwich Store Charge, No. 18.			
Blocks, wood { Both-way... { double, 12-in. / single, 12 ,, ; snatch { 18-in. ... / 12-in. ...	1 / 1 / 2 / 2	For cutting muzzle.	
Cordage, hawser, 3-strand, tarred, 4-inch... ... ... fms.	56½	For cutting muzzle.	
Gyns, triangle, heavy, slings, gun, 3-feet	1		
Lashings, tarred, 2½-inch, 5 fms.	10		

* See footnote * on page 189.

† Price's composite grease will be used in place of Field's grease at all foreign stations except British North America and St. Lucia.

Digitized by Google

Appendix I.—*continued.*

LIST NO. 4—*continued.*

Name of Store.	No. required.	For what purpose.	Remarks.
Woolwich Store Charge, No. 18—continued.			
Ropes { drag, heavy	6		
Ropes { parbuckling, 18 fms. 6-in.	2		
Selvagees, ordinary	6		
Slings, rope, 6-inch, 12 feet long	2	Making fast crab capstan to pickets.	
Woolwich Store Charge, No. 19.			
Planks, moving guns ... half... 6 ft. × 12 in.	3	Roadway, &c.	
Planks, moving guns ... half... 4 ,, × 12 ,,	2	Roadway, &c.	
Planks, moving guns ... whole fir 10 ,, × 17 ,,	8	Roadway, &c.	
Planks, moving guns ... whole fir 10 ft. × 12 in.	4	Roadway, &c.	
Skids* 20 ft. × 15 in. square ...	4	Roadway and general purposes.	6 for guns of 25 tons and upward.
Skids* 6 ,, × 12 ,, ,, ...	2	Roadway and general purposes.	
Skids* 4 ,, × 12 ,, ,, ...	2	Roadway and general purposes.	
Skids* 3 ,, × 9 ,, × 6 in. ...	6	Roadway and general purposes.	
Skids* 3 ,, × 6 ,, × 5 ,, ...	6	Roadway and general purposes.	
Skids* 3 ,, × 6 ,, × 3 ,, ...	6	Roadway and general purposes.	
Wedges, oak, 18-inch	2	For passing from one skid to another when not exactly on equal level.	18 in. × 12 in. × 2½ in.

* The list of skidding is merely an approximation, and must vary with every operation.

Digitized by Google

Appendix I.—*continued.*

Mounting and Dismounting in Open Battery or "C" Emplacement—18 to 47 tons.

LIST No. 5.

Name of Store.	No. required.	For what purpose.	Remarks.
Woolwich Store Charge, No. 10.			
Jacks, lifting, hydraulic, Tangye's, 7½-tons, 15 tons, *or* 22½ tons*	1	... ...	As required.
Shackles, lifting, 38-ton guns ...	1	To lift the breech with a gyn.	For 35 and 38-ton guns.
Woolwich Store Charge, No. 14.			
Gyns, triangle, with appurtenances, heavy, tubular†	1	Lifting breech.	
Woolwich Store Charge, No. 18.			
Gyns, triangle { heavy, slings, gun, 3 ft.	1	Round cascable.	
{ 16 ft., slings	2	General purposes.	
Ropes, drag, heavy...	6		
Selvagees, ordinary	6		
Slings { rope, 12 in., 4 ft. 4 in. long	1	Round cascable ...	Guns of 25 tons.
{ 6-in., 5 ft. long	1	General purposes.	
{ 5 ,, 5 ,, ...	1		
{ 4 ,, 5 ,, ...	1		
Tackles, luff, 14 fathoms ...	2		
Woolwich Store Charge, No. 19.			
Planks, moving guns { half { 6 ft. × 12 in. ...	4	To move guns and slide, &c.	
{ half { 4 ft. × 12 in. ...	8		
{ whole, 10 ft. × 17 in., oak	2		
Rollers, ground, 3 ft. × 5 in. diameter, sabicu	6	To move slide.	
Scotches { large	16		
{ medium...	16		
{ small	16		
Skids‡ { 14 ft. × 8 in. square ...	2		
{ 6 ft. × 12 in. ,, ...	12		
{ 4 ft. × 12 in. ,, ...	4		
{ 3 ft. × 9 in. × 6 in. ...	4		
{ 3 ft. × 6 in. × 5 in. ...	2		
{ 3 ft. × 6 in. × 3 in. ...	4		
{ dismounting { 11½ ft. × 15 in. × 20 in.	1	Under chase	35 to 47-ton guns.
{ dismounting { 11½ ft. × 10 in. × 20 in.	1		11-in. or 12-in. 25-ton guns.
{ dismounting { 10 ft. × 9 in. × 15 in.	1		10-in. guns.

* See footnote * on page 189.

† The power of the gyn having been raised to 15 tons, the tackle for guns over 35 tons should consist of two 18-inch blocks and 20 fms. of 6-inch white rope.

‡ The list of skidding is merely an approximation, and must vary with every operation.

Digitized by Google

Appendix I.—*continued.*

Mounting and Dismounting by Box-Beam in Casemates where the Height of the Crown of the Arch is above 12 feet. (As at Hurst Castle.)* 18 to 47 tons.

List No. 6.

Name of Store.	No. required.	For what purpose.	Remarks.
Woolwich Store Charge, No. 10.			
Apparatus, lifting guns — Blocks ...	20	To support the hydraulic jacks.	16 of 2 ft. × 10 in. × 10 in., 2 of 3 ft. 6 in. × 16 in. × 10 in., and 2 (fitted to base plates) of 1 ft. 10½ in. × 16 in. × 9¾ in.
Hurst pattern — Bolts, bent ...	2	To suspend gun to box-beam.	3 ft. × 2 in.
Hurst pattern — Boxes, beam ...	1		
Hurst pattern — Frames	1	To suspend box-beam.	
Plates, washer	2	Connect bent bolts and main screws.	18 in. × 7 in. × 1½ in.
Screws, main ...	2	To connect beam to frame.	5 ft. × 3 in.
Stands, hydraulic jack ...	—	To steady the jacks.	2 ft. × 2 ft. × 1 ft 8½ in.
Tommies, bottom nut ...	2	For bottom nut of main screw.	
Jacks, lifting, hydraulic, Tangye's, 22½ tons†	2		
Woolwich Store Charge, No. 14.			
Handspikes, 7 feet	6		
Levers — 14 feet	2		
Levers — 12 ,, ...	2		
Levers — 8 ,, ...	1		
Woolwich Store Charge, No. 18.			
Cordage, bawser, 3-strand, tarred, 4½ inch ... ... fms.	6	To support rear of carriage, with 2 luff tackles.	
Ropes, drag, heavy...	6		
Selvagees, ordinary	6		
Tackles — gun, 3-inch white rope	2	For lifting front of carriage.	
Tackles — luff, 14 fathoms ...	2	To support rear of carriage.	
Woolwich Store Charge, No. 19.			
Planks, moving guns — half, 6 ft. × 12 in.	4		
Planks, moving guns — whole, 10 ft. × 12 in.	4		
Scotches — large	6		
Scotches — medium	6		
Scotches — small	6		
Skids — 6 ft. × 12 in. square ...	8		
Skids — 4 ,, × 12 ,, ,, ...	8		
Skids — 3 ,, × 9 ,, × 6 in. ...	12		

* The box-beam is not required when the gun can be hung up in the port on built-up skidding in front of the slide, the upper part of the chase bearing against the top of the port.

† These jacks will be replaced by G.S. jacks of 30 tons as the present stock becomes used up. The 30-ton jack should be used with guns of over 45 tons.

Digitized by Google

Appendix I.—*continued.*

Mounting and Dismounting in Casemates—18 to 47 tons.

LIST No. 7.

Name of Store.	No. required.	For what purpose.	Remarks.
Woolwich Store Charge, No. 10.			
Chain, iron, crane { $\frac{5}{8}$-in. ... ... fms.	1	Short sling...	
{ $\frac{1}{2}$-in. ... ... ,,	1	Lashing beam to cascable....	For beam.
Jacks, lifting, hydraulic, Tangye's, 7½ tons, 15 tons, *or* 22½ tons* (with "Apparatus, lifting guns, Stand, hydraulic jack")	2	... ...	As required.
Woolwich Store Charge, No. 14.			
Levers, 14 feet	2		
Woolwich Store Charge, No. 18.			
Gyns, triangle, 16 feet, slings ...	2		
Ropes, drag, heavy	6		
Selvagees, ordinary	6		
Tackles, gun, 3-in. white rope ...	2		
Woolwich Store Charge, No. 19.			
Planks, moving guns, half { 6 ft. × 12 in. ...	6		
{ 4 ,, × 12 ,, ...	4		
Skids { 6 ft. × 12 in. square	22		
{ 4 ,, × 12 ,, ,, ...	16		
{ 3 ,, × 9 ,, × 6 in.	4		
{ 3 ,, × 6 ,, × 5 ,, ...	2		
{ 3 ,, × 6 ,, × 3 ,, ...	4		
{ dismounting { 11½ ft. × 15 in. × 20 in.	1	... ...	35 to 47-ton guns.
{ dismounting { 11½ ,, × 10 ,, × 20 ,,	2	... ...	11-in. or 12-in. 25 ton guns.
{ dismounting { 10 ,, × 9 ,, × 15 ,,	2	... ...	10-in. guns.

N.B.—When the breech is lowered by means of tackle, the following additional stores will be required:—

Woolwich Store Charge, No. 10.			
Crabs, iron, hoisting guns, 50 tons *or* 25 tons	1	To lift breech ...	According to weight of gun.
Frames, crab, hoisting guns, 50 tons, *or* 25 tons	1	Use with crab.	
Woolwich Store Charge, No. 18.			
Gaskets, crab, 6-in.	1	To stopper fall ...	For 6-in. fall.
Gyns, triangle, heavy, tackles ...	1	To lift breech.	
Lashings, tarred, 2½-in. 5 fathoms	2	To secure crab.	

* See footnote * on page 189.

Digitized by Google

Appendix I.—*continued.*

Mounting and Dismounting by Box-Beam Suspended from Roof of Casemate. (As at Spitbank Fort.)—18 to 47 tons.

LIST No. 8.

Name of Store.	No. required.	For what purpose.	Remarks.
Woolwich Store Charge, No. 10.			
Apparatus, lifting guns — Hurst pattern — Bolts, bent ...	2	To suspend gun to box-beam	3 ft. × 2 in.
Boxes, beam ...	1		
Plates, washer	2	Connect bent bolts and main screws	18 in. × 7 in. × 1½ in.
Screws, main	2	To connect beam to roof of casemates.	5 ft. × 3 in.
Stands, hydraulic jack ...	2	To steady the jack.	2ft. × 2ft. × 1ft. 8½ in.
Tommies, bottom nut ...	2	For bottom nut of main screw.	
Jacks, lifting, hydraulic, Tangye's, 22½ tons*	2		
Woolwich Store Charge, No. 14.			
Handspikes, common, 7 feet ...	6		
Levers — 14 feet	2		
12 ,, ...	2		
8 ,, ...	1		
Woolwich Store Charge, No. 18.			
Cordage, hawser, 3-strand, tarred, 4½ inch ... ... fms.	6	To support rear of carriage, with 2 luff tackles.	Or one 4½ in. parbuckling rope.
Ropes, drag, heavy...	6		
Selvagees, ordinary	6		
Tackles — gun, 3 in. white rope	2	For lifting front of carriage.	
luff, 14 fathoms ...	2		
Woolwich Store Charge, No. 19.			
Planks, moving guns — half, 6 ft. × 12 in. ...	4		
whole, 10 ft. × 12 in. ...	4		
Scotches — large	6		
medium	6		
small	6		
Skids — 6 ft. × 12 in. square ...	8		
4 ft. × 12 in. ,, ...	8		
3 ft. × 9 in. × 6 in. ...	12		

* See footnote on page 194.

N.B.—Short lengths of ½-inch chain (about 4 fathoms each) will be found useful when hoisting the carriage by tackle made fast to the box-beam.

Only 38-ton guns are fitted with studs to the trunnions, for the loop of the box-beam.

Digitized by Google

Appendix I.—*continued.*

Mounting and Dismounting Heavy Ordnance in Low-Roofed Casemates less than 9 feet 6 inches in height. (As at Sliema Point Battery, Malta; and Seaforth Battery, Mersey Defences.)—18 to 47 tons.

LIST NO. 9.

Name of Store.	No. required.	For what purpose.	Remarks.
Woolwich Store Charge, No. 10.			
Apparatus, lifting guns, Sliema pattern: bolts, bent, cascable	1	To fit round cascable.	3 ft. × 2 in.
bolts, bent, trunnion	2	To fit round trunnion.	2 ft. 9 in. × 2 in.
pins, top nut	3	For top nut of main screws.	
plates, washer, cascable	1	Connect bent bolts and main screws.	22 in. × 9 in. × 4¼ in.
plates, washer, trunnion	2	Connect bent bolts and main screws.	18 ,, × 9¼ ,, × 4 ,,
plates, supporting washer plates, cascable	2	... ...	21 in. long.
plates, supporting washer plates, trunnion	4	... ...	22½ ,, ,,
screws, main, cascable	1	Connects the washer plates.	2 ft. 5¾ in. × 3 in.
screws, main, trunnion	2	Connects the washer plates.	2 ft. 5¾ in. × 3 in.
stands, hydraulic jack ...	2	For steadying the jack.	2 ft. × 2 ft. × 1 ft. 8½ in.
tommies, bottom nut	3	For bottom nut of main screws.	
Jacks, lifting, hydraulic, Tangye's, 22½ tons*	2		

* See footnote † on page 194.

N.B.—For bringing the gun into position, *see* Lists 3 and 4, as required.

Digitized by Google

Appendix I.—*continued.*

Embarking and Disembarking, &c., by Heavy Sheers. 18 to 47 tons.

List No. 10.

Name of Store.	For raising guns of 35 to 47 tons.	For raising guns of 18 to 25 tons.	Remarks.
Woolwich Store Charge, No. 2.			
Axes, pick { heads, 6½ lbs.	4	4	
{ helves, 34½ inches ...	4	4	
Drivers, pile, Swiss	3	3	
Mauls, iron-hooped	12	12	For driving pickets.
Posts, picket { 8-feet	32	12	For holdfasts.
{ 5 ,, ...	20	12	
	—	12	Holdfasts for foot tackles of derrick.
Shovels, universal	6	6	
Woolwich Store Charge, No. 10.			
Chains, sheers, heavy, 70 feet (12½ fms. long) { 1¼-inch, 38-ton guns	2	—	For holdfasts for standing blocks of guys.
{ 1½ ,, 25 ,, ,,	—	2	For holdfasts.
{ 1 ,, ...	2	—	For leading blocks at holdfasts.
{	—	2	For holdfasts.
{ ¾ ,, ...	4	—	For holdfasts, as required.
Crabs, hoisting guns* { 50 tons	4	4	2 for main tackles { 25- to 47-ton guns.
{ 25 ,, ...	—	4	2 ,, guys ...
			2 for main tackles { 18-ton guns.
			2 ,, guys ...
Frames, crab, hoisting guns { 50 tons	4	4	Use with crabs.
{ 25 ,,	—	4	
Guys, heavy sheers† { 7-inch (lengths of 30 ft.)	8	—	Ropes, wire 6-in. in lieu.
{ 5½ ,, ,,	—	6	,, ,, 5½ ,, ,,

57
Gen. No.
6037

* With 45 and 47-ton guns 2 extra crabs, iron, hoisting guns, 25 tons, will be required with messengers to reinforce the main fall crabs.

† If steel wire guys are supplied the sizes will be less.

Digitized by Google

Appendix I.—*continued.*

LIST No. 10—*continued.*

Name of Store.	For raising guns of		Remarks.
	35 to 47 tons.	18 to 25 tons.	
Woolwich Store Charge, No. 10—continued.			
Shackles { lifting 38-ton guns ...	1	—	For lifting the breech with 35 and 38-ton guns.
Shackles { sheer, heavy	—	4	Capable of taking 18-in. blocks at holdfasts.
Sheers, 70 feet, without tackle set	1	—	Fitted with head bolt and chains. For main tackles.
Thimbles, sheer, 9-in. rope	—	4	For use with guy straps (9-inch) and main tackles.*
Woolwich Store Charge, No. 11.			
Grease, Field's † ... * ... ... lbs.	6	6	
Woolwich Store Charge, No. 14.			
Capstans, crab	2	2	For hauling forward feet of sheers when raised or assisting crabs.
Woolwich Store Charge, No. 18.			
Blocks, wood { Bothway, treble { 21-inch ...	8	—	4 for main tackles, 4 for guys.‡
Blocks, wood { Bothway, treble { 18 ,, ...	—	8	4 for main tackles, 4 for guy tackles.
Blocks, wood { snatch ... { 21 ,, ...	4	—	For altering lead of main tackle and guy runner falls.
Blocks, wood { snatch ... { 18 ,, ...	2	4	For derrick and altering lead.
Blocks, wood { snatch ... { 18 ,, ...	—	2	For main tackle at foot of sheers.
Blocks, wood { snatch ... { 15 ,, ...	—	2	Back guy of derrick.

* If steel wire guys are supplied the sizes will be less.

† Price's composite grease will be used in place of Field's grease at all foreign stations except British North America and St. Lucia.

‡ If rigged with two back guys provision must be made accordingly.

Digitized by Google

Appendix I.—*continued.*

LIST No. 10—*continued.*

Name of Store.	For raising guns of: 35 to 47 tons.	For raising guns of: 18 to 25 tons.	Remarks.
Woolwich Store Charge, No. 18—continued.			
Cordage, tarred, 2½-inch ... fms.	—	60	12 lashings of 5 fms. each.
tarred, *or* white, 1½-in. ,,	80	80	For anti-twisters.
hawser, 3 strand, 7-inch .. ,,	452	—	2 coils for main tackles.
	56	—	2 ,, ,, guys.* With 47-ton guns, for messenger to reinforce crabs.
6 ,, ... ,,	—	452	2 coils for main tackles.
	113	—	2 ,, ,, guys.*
4½ ,, ... ,,	—	113	Back guy of derrick.
	24	—	2 lashings of 12 fms. for lashing lower blocks of main tackles to spars.
white, 4 ,, ... ,,	—	35†	Head lashing.
	169	169	Side guys of derrick.
3 ,, ... ,,	—	24	2 lashings for snatch blocks at foot of sheers.
	—	6	Lashing leading blocks to foot of derrick.
	80	—	8 lashings of 10 fms., lashing blocks on derrick.
2½ ,, ... ,,	—	9	Head lashing of derrick.
	—	8	2 pieces of 4 fms. each, for lashing blocks of tackles to derricks.
tarred, spun yarn, hemp, 3-thread lbs.	6	5	
Gaskets, crab	4	4	
slings, gun, 16 feet ...	—	4†	2 for guy straps, 2 for main tackles.
3 ,, ...	—	2	For cascable and chase when lifting 25-ton guns.
Gyns, triangle, heavy, tackles	4	—	For foot tackles and moving feet of sheers.
thimbles, sling, 16 feet	—	4	
16-feet, tackles	2	—	For foot tackles of derricks.
	—	2	For foot tackles of sheers.
slings	2	—	For securing capstans.
	—	3	2 for foot tackles and 1 for head of derricks.
Lashings, tarred, 2½-in., 5 fms. ...	12	12	Lashing pickets, &c.
Ropes, drag, heavy	16	16	General purposes.
Selvagees, ordinary	24	24	General purposes.
Slings, rope, 12-inch, 4 ft. 4 in. long	1	—	For lifting chase.
	—	2	For cascable and chase when lifting 25-ton guns.
6-inch, 5 ft. long	—	1	For use in erecting sheers.
5 ,, ,, ,, ...	—	1	
4 ,, ,, ,, ...	—	1	

* If rigged with two back guys provision must be made accordingly.

† Not required for sheers which have the head fitted with iron bolt, wire guys, and hook and chain, for attaching main tackles.

Digitized by Google

Appendix I.—*continued.*

LIST No. 10—*continued.*

Name of Store.	For raising guns of		Remarks.
	35 to 47 tons.	18 to 25 tons.	
Woolwich Store Charge, No. 18—continued.			
Tackles { gun, 3-in., white rope ...	—	2	For foot tackles of derrick.
Tackles { luff, 14 fathoms	4	4	Runners for derrick guys, &c.
Woolwich Store Charge, No. 19.			
Planks, moving guns, whole, 10 ft. × 17 in. { fir	20	8	For placing under coils of rope and for holdfasts.
Planks, moving guns, whole, 10 ft. × 17 in. { oak	12	6	For placing under shoes or feet of sheers.
Rollers, ground, 6 ft. × 10 in. diameter	8	—	For moving spars and crab winches.
Shoes, sheer { 4 ft. 6 in. × 3 ft. 6 in. ...	2	2	For feet of sheers.
Shoes, sheer { 3 ft. 6 in. × 2 ft. 6 in. ...	1	1	For foot of derrick.
Skids* { 14 ft. × 12 in. square, oak ...	2	2	For heavy holdfasts.
Skids* { 6 ft. × 12 in. square	20	12	Skidding spars, &c.
Timber, spars for sheers and derricks ... { 20-inch (60 feet) ...	—	2	Sheer legs.
Timber, spars for sheers and derricks ... { 15 ,, (50 ,,) ...	1	—	For derricks.
Timber, spars for sheers and derricks ... { 10 ,, (40 ,,) ...	—	1	For derricks.
Timber, spars for sheers and derricks ... { 10 ,, (30 ,,) ...	1	—	For securing across feet of sheers when moving them to the front.

* The estimate for skidding is merely approximate and must vary with the nature of the operation.

N.B.—The stores required for the holdfasts must in a great measure depend on local circumstances.

Should it be required to heel sheers, when raising 18 to 47-ton guns, at an angle greater than 15° from the perpendicular, they should be rigged with two guys on the side which has to take the weight at extreme heel.

This detail only makes provision for one back and one fore guy, and if two are required demands should be framed accordingly.

Gear for Landing Heavy Ordnance at Iron-clad Forts. (As at Spithead and Plymouth Breakwater.)—18 to 47 tons.

LIST No. 11.

This gear is special, and supplied where required.

No other stores will be required, except for removing the guns when landed, for which see List No. 3.

Digitized by Google

Appendix I.—*continued.*

Mounting and Dismounting Guns up to 25 tons, in Casemates 12 feet and under, when Yeatman Tackle is used—18 to 25 tons.

LIST No. 12.

Name of Store.	No. required.	For what purpose.	Remarks.
Woolwich Store Charge, No. 10.			
Crabs, iron, hoisting guns 25 tons	3	2 for muzzle tackle 1 for breech tackle	
Frames, crab, hoisting guns, 25 tons	3	Use with crabs.	
Jacks, lifting, hydraulic, Tangye's, 15 tons*	1		
Shackles, sling, mounting guns in casemate to 25 tons (2 to a set)	1 set		
Woolwich Store Charge, No. 18.			
Blocks, tackle, mounting guns in casemates, 18-inch, cascable	1	Breech.	
Blocks, tackle, mounting guns in casemates, 18-inch, crown	1	Breech.	
Blocks, tackle, mounting guns in casemates, 12 ,, with special shackle	2	Muzzle ...	2 for muzzle straps. 2 for crown of arch.
Blocks, tackle, mounting guns in casemates, 12 ,, with special shackle to swivel	2	Muzzle ...	2 for muzzle straps. 2 for crown of arch.
Blocks, wood, Bothway, single, 12-inch	1	Runner tackle, for breech.	
Cordage, hawser, 3-strand, white, 6-inch (15 fms.)	1	Breech tackle	
Cordage, hawser, 3-strand, white, 4 ,, (12 fms. 2 to a set)	1 set	Muzzle tackle	For falls of tackles.
Cordage, hawser, 3-strand, white, 4 ,, (56 fms.)	1	Runner ...	
Gaskets, crab	3	Stoppering falls	1 for 6-inch fall. 2 for 4 ,, ,,
Lashings, tarred, 2½-inch, 5 fathoms	6	Securing crabs.	
Slings, rope, wire, 3-inch	1	For chase	3 ft. 5 in.
Woolwich Store Charge, No. 19.			
Skids, 3 ft. × 9 in. × 6 in. ...	6		

* These jacks will be replaced by G.S. jacks of 20 tons, as the present stock becomes used up.

N.B.—Holdfasts will probably be required to secure the breech crab; the ringbolts in casemates will probably be sufficient for muzzle crab.

Digitized by Google

Appendix I.—*continued.*

Gear for Mounting and Dismounting 38-ton Guns on Small Port Carriages.

(As at Plymouth Breakwater Fort, and Fort Cunningham, Bermuda.)

LIST No. 13.

Name of Store.				No. required.	For what purpose.	Remarks.
Woolwich Store Charge, No. 10.						
Apparatus, lifting guns	small port pattern	bars, suspending	upper	1	For suspending long screw bolts	4 ft. 10 in. × 9 in. × 5 in.
			lower	1	For suspending the bent bolt that passes round cascable	2 ft. 8 in. × 8 in. × 5 in.
		blocks		1	For fitting inside the bent bolt on top of cascable	1 ft. 4 in. × 11 in. × 5 in.
		bolts, bent	upper bar	1	For connecting top bar to rear loop bolt in roof of casemate	1 ft. 4½ in. × 2 in.
			cascable	1	To fit round the cascable	2 ft. 5 in. × 2 in.
		bolts, connecting bars		2	For connecting upper and lower bars	5 ft. 3 in. × 2 in.
		pads		1	To ensure a better bearing between the roof bolt and the bent bolt	$3\frac{1}{16}$ in. × $3\frac{1}{16}$ in. × $\frac{3}{4}$ in. average
	stands, hydraulic, jack			2	For steadying the hydraulic jacks	2 ft. × 2 ft. × 1 ft. 8½ in.
Jacks, lifting, hydraulic, Tangye's, 22½ tons*				2		
Tommies				2	For screwing up nuts.	

* *See* footnote † on page 194.

Digitized by Google

Appendix I.—*continued.*

Gear for Landing Carriages, Slides, &c., at Sea Forts.

List No. 14.

This gear is special, and supplied where required.

The only stores required with it are one or two sets of heavy tackle, 18-inch blocks, 6-inch fall.

Gear for Landing, Transporting, Mounting, and Dismounting 17·72-inch R.M.L. Guns.

List No. 15.

This gear is special, and supplied to Gibraltar and Malta; details are furnished in 17·72-inch R.M.L. gun handbook. Before being sent to the Mediterranean it was used for the 16-inch R.M.L. guns at the Admiralty Pier, Dover.

Digitized by Google

Appendix I.—*continued.*

Distribution List of Special Gear and Stores for Landing, Transporting, Mounting, and Dismounting Guns of 18 to 100 Tons.

District.	Sub-District or Work.	No. of List as laid down at pages														Remarks.
		1	2	3	4	5	6	7	8	9	10	11	12	13	14	15	
Home.																	
Cork ...	General use...	...	...	1	1	1	...	1	...	...	...	...	1	...	...	...	
Dublin ...	General use...	...	...	1	...	1	...	...	...	...	1	...	...	...	...	...	
Eastern ...	LandguardFt.	...	...	1	...	...	...	...	1	...	...	...	1	...	...	...	
57 N. Western	Seaforth Bat.	...	...	...	...	...	...	...	...	1	...	...	...	...	...	...	
Liverpool Scottish ...	Firth of Forth Batteries	...	...	...	1	1	...	...	...	...	...	...	...	...	...	...	
311. S. Eastern	Dover... ...	...	...	...	1	1	...	...	...	...	...	...	...	...	...	...	
	Newhaven ...	...	...	...	1	1	...	...	...	...	...	...	...	...	...	...	
38407	General use...	...	...	1	...	...	...	...	...	...	...	1a	...		...	...	
Equipment	Portsmouth	...	...	...	} 1	1	...				...	...	...		...	...	
1463.	Spithead ...	...	...	...	}		...		1	...	...	...	...	1	3	...	Spitbank, No Man's Land, and Horse Sand.
Southern								} 1									
	Needles ...	...	...	...	} 1	...	1		...	...	...	...	...		...	..	
	Isle of Wight	...	...	...					...	...	...	...	...		...	...	
57	Portland ...	...	...	...	1	1	...	...	1	...	...	...	1		1	...	
Weymouth	Nothe Fort ...	...	...	...	...	...	1	...			...	...	...			...	
983.	General use ...	...	...	1	...	...	...	...	...	...	...	...	...	...	...	...	
Thames ...	Sheerness ...	...	...	...	1	...	...	1	...	...	...	...	...	...	...	...	
	Thames Forts	...	...	...	1	...	1	...	...	...	...	...	1	...	...	...	
	Isle of Grain	...	...	...	...	1	...	...	...	...	...	...	...	...	...	...	
	General use...	...	...	1	...	...	...	...	...	...	...	...	...		...	...	
Western	Plymouth ...	...	...	...	1	1	...	1	...	...	...	...	...	1	1	...	
57	Pembroke ...	...	...	...	1	...	...	...	...	...	...	...	1		...	...	
Liverpool	Woolwich Arsenal	2*	1	...	...	...	1	...	...	1	2†	...	...	...	...	...	For general use, and will be demanded on loan as required
311.	*Abroad.*																
57	General use...	...	...	1	1	1	...	...	...	...	...	...	...	...	...	...	
Gen. No.	Bermuda	Fort Cunningham	...	...	...	...	...	...	...	...	...	...	...	1	...	...	
6037	C. of G. H.	Table Bay.....	1	...	1	...	1	...	...	...	...	1	...	...	...	...	
57	Ceylon ...	Colombo	...	...	1	...	...	...	...	...	...	...	...	...	...	...	
Ceylon		Trincomalie...	...	...	...	...	1	...	...	...	...	...	...	...	...	...	
708.	Gibraltar ...	General use...	...	...	1	1	1	1	1	...	...	...	1	...	...	§	
57	Halifax, N.S.	General use...	...	...	1	1	...	...	1	...	...	1	...	...	...	...	
Cape		York Redoubt	...	...	...	...	1	...	...	...	...	...	...	...	...	...	
5300	Hong Kong		...	...	1	1	1	...	...	...	...	...	...	...	...	...	
	Jamaica		...	...	...	...	1	...	...	...	...	1	...	...	...	...	
	Malta	General use...	...	1	1‡	1	1	1	...	...	...	...	1	...	...	§	
		Sliema Fort ..	...	...	...	...	...	...	...	...	1	...	...	...	...	...	
	Mauritius...		...	...	1	...	1	...	...	...	...	1	...	...	...	...	
	Sierra Leone		...	...	1	...	1	...	...	...	...	1	...	...	...	...	
	Straits Settlements	Singapore ...	...	...	1	1	1	...	...	...	...	...	...	...	...	...	
	St. Helena		...	...	...	...	1	...	...	...	...	1	...	...	...	...	
	St. Lucia		...	...	1	1	...	...	...	...	...	...	...	...	...	...	

* One set is composed of two short trucks, made for use at Seaforth.

† The 2 sets are fitted with special head and feet gear, tackle, chain, guys, and 25-ton crabs. Sufficient spars in addition are in store.

‡ Two sleighs.

§ Special supplies have been made to Gibraltar and Malta.

a Common to ironclad forts at No Man's Land, Horse Sand, Spitbank, and Portland and Plymouth Breakwaters. It will be kept in store at Portsmouth in readiness for service at short notice.

57 Gen. No. 6037

Digitized by Google

APPENDIX II.

ARRANGEMENT OF STORES IN WORKS.

Referred to in paragraph 68, *Section* XII, *Part* 2.

Grouping of stores.

1. The various articles allowed for the equipment of a work should be stored with reference to the ordnance for which they are required, rather than by nature of the article or convenience of storage; they should therefore be separately grouped according to the ordnance and batteries to which they belong.

Spare articles.

2. Spare articles, which are provided in certain proportions for an aggregate number of pieces, should be collected together by class or nature in those artillery store rooms designated "General," for the convenience of charge and inspection.

Stores for each piece to be kept separate.

3. In every Artillery Store other than "General," a separate place should be assigned to the separate collection of articles necessary to the equipment of each piece, and each such place should be so plainly marked with the number, nature, and position of the piece to which the articles belong, that they may be immediately distinguished and taken up by men not previously familiar with the Store. If the fuzes and tubes are kept in the Artillery Store, they will also be dealt with as above.

Case shot.

4. Case shot should be, as far as practicable, near their respective pieces. Where there is room, a few rounds (say 5) should be stored in the shell recesses in addition to the filled shells, but if this is inconvenient, or if no recesses exist, some case shot must be stored as near to the ordnance as circumstances will admit, and not all for one work collected in the same place.

Palliser shot fitted with gas checks.

5. In works where sufficient shell store accommodation is available, 25 per cent. of the Palliser shot (studded) will have the gas checks attached and stored therein. Where no sufficient accommodation exists, 10 per cent. will be so fitted, and stored as near to the gun as circumstances will permit.

Digitized by Google

Appendix II.—*continued.*

Wood bottoms.

6. Wood bottoms for spherical shells, with the rivets and implements for fixing them, should be kept in the lobby of the laboratory. Where this cannot be done, they must be kept near the place where it is proposed to fix them. The place where they are kept should be dry.

Empty shells.

7. Empty shells should, as a rule, be piled near the place for filling them, and where covered space is available it should be utilized as far as possible. All those for one fort need not necessarily be on the same spot, but they should be contiguous to the place where the operation would be performed. Under no circumstances should shells be piled at the rear of the slides.

Gas checks.

8. Gas checks, when not fitted to projectiles, will be kept packed in the cases in which they are issued from store.

Wedge wads.

9. Wedge wads, where required, should be kept in due proportions in the same place as the filled shells, unless the place is damp, in which case they should be as near as may be found practicable.

Implements.

10. All implements connected with making up cartridges should be kept in the cartridge filling room, and all those connected with filling shells should be kept in the shell filling room. In forts where there is no laboratory, these implements should be kept by sets at one end, or part, of the Artillery General Store.

Keys and wrenches.

11. General service keys for fuze hole plugs should be kept in the shell stores for the guns to which they belong, and two per laboratory where shells are filled should be kept in the shell filling room. The wrench for removing base plugs should also be kept in the shell filling room.

Fuzes and tubes with each piece.

12. The number of fuzes and tubes to be kept with each piece will be found in the details.

Tubes at stations abroad.

13. At stations abroad cylinders of tubes will be kept packed in the metal-lined cases in which they are issued from the Army Ordnance Department.

Storage of fuzes and tubes.

14. In works where the specified accommodation for fuzes and tubes is provided, these stores will be placed there, but when no such accommodation exists, the store most convenient for, and adjacent to, each piece, must be selected for the purpose. It is most important that the store be a dry one.

Digitized by Google

APPENDIX III.

RANGE-FINDERS.

DEPRESSION RANGE-FINDERS.

(*Referred to in paragraph 94, Part 2, Section XII.*)

List of Coast Batteries having an elevation of 30 feet, and upwards, above high-water mark, for which Depression Range-Finders are allowed.

District and Work.	Description of Instrument.						Remarks.
	Mark I.	Mark Ia.	Mark Ib.	Mark Ic.	Mark Id.	Special.	
HOME.							
Belfast.							
Lough Swilly—							
Neds Point Fort	..	1	..	..	..	..	
Dunree Fort	..	..	1	..	..	..	
Lenan Head	..	..	2	..	..	..	
Dunree Hill	..	..	..	2	..	..	
Inch Fort	..	1	..	..	..	..	
Cork.							
Fort Camden—							
Right Upper Battery	1	..	..	..	..	..	

57
Gen. No.
4347
Digitized by Google

Right Lower Battery	..	1	..	..	..	..		
Left Upper Battery	..	..	..	..	..	..		
,, Lower Battery	..	..	..	..	..	..		
Fort Carlisle—								
Rupert's Tower Battery	..	..	1	..	..	..		
No. 1 Battery	..	1	..	..	..	..		
,, 2 ,, ...	..	..	..	..	..	..		
,, 4 ,, ...	2	..	..	..	..	..	1 for C.O. Station.	
Fort Westmoreland	3	..	..	..	..	..		
Instruction	1	..	..	..	..	..		
EASTERN.								
Shotley Point Battery	..	3	..	..	..	..		
Landguard Fort	..	..	..	..	3	..		
Landguard Wing Battery	..	..	..	..	1	..		
Harwich Redoubt	..	..	..	..	1	..		
Beacon Hill Battery	..	..	..	..	1	..		
Instruction	..	..	..	..	1	..		
GUERNSEY.								
Castle Cornet	..	1	..	..	..	..		
JERSEY.								
Elizabeth Castle	..	1	..	..	..	..		
South Hill Redoubt and Point de Pas Tower	..	..	1	..	..	..		
NORTH-EASTERN.								
Tynemouth Castle	..	2	..	..	..	..		
Lighthouse Battery	..	..	..	..	1	..		
Spanish Battery	..	..	..	..	1	..	} Specially graduated.	
Cemetery Battery	..	..	..	..	1	..		
Paull Point Battery	..	..	..	..	..	..	Mark of instrument not known.	

Digitized by Google

APPENDIX III.—*continued.*

District and Work.	Description of Instrument.						Remarks.
	Mark I.	Mark Ia.	Mark Ib.	Mark Ic.	Mark Id.	Special.	
NORTH-WESTERN.							
Seaforth Battery	..	..	..	..	1	..	
SCOTTISH.							
Inchkeith—							
No. 1 Battery	1	..	..	..	..	..	
„ 2 „	1	..	..	..	..	..	
„ 3 „	..	1	..	..	..	..	
„ 4 „	1	..	..	..	..	..	
Kinghornness	..	2	..	..	..	..	
Leith Fort—for Instruction ..	1	..	..	..	..	..	
SOUTHERN.							
Southsea Castle	..	..	..	..	2	..	
Lumps Fort	..	..	..	..	1	..	
Eastney Batteries	..	..	..	..	2	..	
Fort Cumberland	..	..	..	..	2	..	
Browndown Battery	..	..	..	..	1	..	
Stokes Bay Lines	..	..	..	..	1	..	
Fort Gilkicker	..	..	..	..	2	1§	§Old Pattern P.F. for instruction.
Horse Sand Fort	..	..	..	..	1	..	
No Man's Land Fort	..	..	..	..	2	..	

57 Edin. 2860

Digitized by Google

Spitbank Fort..	..	..	..	..	1	..	
St. Helen's Fort	..	..	..	..	2	..	
Instruction—							
Gosport ..	..	..	..	..	1	..	
Portsmouth	..	..	..	..	2	..	
Isle of Wight—							
Needles Battery	..	..	..	1	..	1	
Hatherwood	..	..	..	1	..	..	
Warden Point	..	..	2	..	..	..	
Cliff End Battery	..	..	2	..	..	..	
Hurst Castle	..	..	..	..	3	..	
Sandown Fort	..	..	..	..	1	..	
Sandown Barrack Battery		..	1	..	..	..	
Puckpool Battery ..	..	..	..	..	1	..	
Instruction..	..	..	1	..	..	..	
Weymouth—							
East Weir Batteries "A"	..	..	..	2	..	..	
East Weir Batteries "B"	..	..	..	1	..	..	
East Weir Batteries "C"	..	1	..	..	..	..	
East Weir Batteries "D"	..	..	..	1	..	..	
East Weir Batteries "E"	..	..	..	..	..	..	
Verne Citadel	..	..	..	1	2	..	
Nothe Fort..	..	..	..	2	..	..	
Instruction—							
Nothe Fort..	..	..	..	1	..	..	
General—Weymouth District		..	..	..	1*	..	
Portland—							
Breakwater Fort	..	..	..	..	..	2	..
South-Eastern.							
East Demi-Bastion	..	..	..	..	1	..	..
Shotyard Battery	..	..	..	..	1	..	..

*Unserviceable.

Digitized by Google

APPENDIX III.—*continued.*

District and Work.	Description of Instrument.						Remarks.
	Mark I.	Mark Ia.	Mark Ib.	Mark Ic.	Mark Id.	Special.	
SOUTH-EASTERN—*continued.*							
Shoulder-of-Mutton Battery ..	..	..	1	..	..	..	
St. Martin's Battery	..	..	..	1	..	..	
South Lines	1	..	..	..	..	..	
Archcliffe Fort	..	1	..	..	..	..	
Newhaven	3	..	..	..	..	..	
Pier Turret	..	..	..	..	1	..	Observing Station for O.C.R.A.
Hospital Battery	..	..	..	1	..	..	
Instruction	1	..	..	..	..	..	
THAMES.							
Coalhouse Fort	..	..	..	..	..	2	O.P. Position-Finders.
Shornmead Fort	..	..	..	..	2	..	
Cliffe Fort	..	..	..	..	2	..	
Coalhouse Battery	..	..	..	..	1	..	
Tilbury Fort	..	..	..	..	3	..	
Barton's Point Battery	..	..	..	..	2	..	
Sheerness Lines	..	..	..	..	2	..	
New Tavern Fort	..	2	..	..	..	..	
Garrison Point Fort	..	..	..	..	2	..	Specially graduated.
Grain Fort	..	3	..	..	..	..	
Grain Wing Battery	..	..	..	..	1	..	Specially graduated.

Digitized by Google

Slough Fort	..	..	..	2	..	..	..	3	..	
Hoo Fort	..	..	..	..	..	..	..	..	..	
Darnet Fort	..	..	..	..	..	..	..	2	..	
Instruction	..	..	..	1	..	..	..	..	..	
Western.										
Plymouth—										
Bovisand Practice Battery	..	..	..	..	1	..	..	..	..	
Fort Bovisand ..	..	..	..	..	..	1	..	..	..	
Breakwater Fort ..	..	..	..	..	..	..	..	1	..	
Fort Stamford ..	..	..	1	..	..	..	..	..	..	
Picklecombe Fort ..	..	..	..	..	2	..	..	..	..	
Maker Heights Battery	..	..	..	..	..	1	..	..	..	
Staddon Heights Battery ..	..	..	..	..	..	1	..	..	..	
Drake's Island ..	..	..	..	2	..	..	..	..	..	
Frobisher Battery ..	..	..	..	..	..	1	..	..	..	
Polhawn Battery ..	..	..	..	..	1	..	..	..	..	
Penlee	..	..	..	..	..	2	..	..	..	
Cawsand Battery ..	..	..	..	..	1	..	..	..	..	
Raleigh ,, ..	..	..	..	..	..	1	..	..	..	
Whitsand Bay ..	..	..	..	..	..	2	..	..	..	
Instruction ..	..	..	..	..	..	..	..	..	..	
Falmouth—										Mark not known.
St. Anthony's Head	..	..	..	..	..	..	..	..	..	
Half Moon Battery	..	..	..	..	1	..	..	..	..	
Pendennis Castle ..	..	..	1	..	..	..	..	..	..	
Severn Defences—										
Breandown Battery	..	..	..	..	2	..	..	..	..	
Flatholme	..	..	..	3	..	..	..	..	1	
Steepholme.. ..	..	..	..	..	1	..	..	..	..	
Lavernock	..	..	1	..	..	..	..	..	..	

Digitized by Google

APPENDIX III.—*continued.*

District and Work.	Description of Instrument.						Remarks.
	Mark I.	Mark IA.	Mark IB.	Mark IC.	Mark ID.	Special.	
WESTERN—*continued.*							
Pembroke—							
Chapel Bay Battery	..	..	2	..	..	..	
Stack Rock	..	3	..	..	..	..	
South Hook Battery	2	..	..	..	..	..	
Popton Point	..	2	..	..	..	..	
Hubberstone	..	2	..	..	..	..	
St. Catherine's Fort	1	..	..	..	..	..	
West Blockhouse Battery	..	1	..	..	..	..	
Instruction	1	1	..	..	..	..	
ABROAD.							
BERMUDA.							
Fort Cunningham	1	..	..	..	..	..	
Alexandra Battery	..	..	..	..	2	..	
Fort Albert	..	..	1	..	..	..	
„ Catherine	..	..	..	..	3	..	
„ Victoria	..	..	2	..	..	..	
„ George	2	..	..	..	..	..	
Whale Bay Battery	..	..	1	..	..	..	
Ireland Island	..	..	..	..	4	..	

Digitized by Google

| | | |

APPENDIX III.—*continued.*

District and Work.	Description of Instrument.						Remarks.
	Mark I.	Mark Ia.	Mark Ib.	Mark Ic.	Mark Id.	Special.	
CEYLON—*continued.*							
Fort Frederick—							
Flagstaff Battery	..	..	1	..	..	..	
Eastern	1	..	..	..	..	..	
Portugese Bastion and Ostenburg	..	1	..	..	..	..	
Cavalier and Citadel	1	..	..	..	..	..	
West Battery	..	1	..	..	..	..	
Instruction..	..	..	1	..	..	..	
CHINA.							
Lymoon, West	1	..	..	..	..	..	
„ Central	..	..	1	..	..	..	
„ Redoubt	2	..	..	..	..	..	
„ Reverse	..	1	..	..	..	..	
North Point	2	..	..	..	..	..	
Victoria Battery	..	..	..	..	..	..	
Kowloon Dock	2	..	..	..	..	..	
„ East	..	..	1	..	..	..	
„ West	..	2	..	..	..	..	
Stonecutters—							
West	..	..	3	..	..	..	
Central	..	..	1	..	..	..	
East..	2	..	..	..	..	..	

Digitized by Google

| | | |

APPENDIX III.—*continued.*

District and Work.	Description of Instrument.						Remarks.
	Mark I.	Mark IA.	Mark IB.	Mark IC.	Mark ID.	Special.	
GIBRALTAR—*continued.*							
Buena Vista	1	..	..	..	..	..	
Princess Royal Battery	..	..	..	1	..	..	
Prince George's Battery	1	..	..	..	..	..	
Europa Hutment Battery	1	..	..	..	..	..	
Harding's Fort	1	..	..	..	..	..	
Instruction	1	..	..	1	..	..	
HALIFAX, N.S.							
Fort George	..	..	..	2	..	..	
„ Clarence	..	2	..	..	..	..	
„ Charlotte	..	3	..	..	..	..	
Ives Point Battery	2	..	..	..	..	..	
Fort Cambridge	..	2	..	..	..	..	
„ Ogilvie	2	..	..	..	..	..	
York Redoubt	..	..	2	..	..	..	
Fort McNab, North	..	1	..	..	..	..	
„ „ South	..	1	..	..	..	..	
Instruction	..	..	..	1	..	..	
JAMAICA.							
Apostles' Battery	1	..	..	..	..	..	

Digitized by Google

| | | |

APPENDIX III.—*continued.*

District and Work.	Description of Instrument.						Remarks.
	Mark I.	Mark Ia.	Mark Ib.	Mark Ic.	Mark Id.	Special.	
MALTA—*continued.*							
Floriana—							
Crucifix Bastion	1	..	..	..	..	..	
Ricasoli—							
Fort Ricasoli { No. 1 Bastion	..	1	..	..	..	..	
„ 2 „	..	2	..	..	..	..	
„ 3 „	..	1	..	..	..	..	
„ 5 Curtain	..	1	..	..	..	..	
Left Ravelin	1	..	..	..	..	..	
Rinella Battery	..	1	..	..	..	..	
San Leonardo—							
San Rocco Fort	1	..	..	..	..	..	
San Leonardo	..	..	2	..	..	..	
Della Grazia	..	2	..	..	..	..	
Delimara—							
Delimara Fort	2	..	..	..	..	..	
St. Lucien Fort	1	..	..	..	..	..	
St. Paul's Sciorb	..	..	1	..	..	..	
Fort Ta Silc	..	..	3	..	..	..	
St. Angelo—							
Fort St. Angelo	1	..	..	..	..	..	
Instruction	1	2	..	..	..	..	

Digitized by Google

| | | |

APPENDIX III.—*continued.*

District and Work.	Description of Instrument.						Remarks.
	Mark I.	Mark IA.	Mark IB.	Mark IC.	Mark ID.	Special.	
STRAITS SETTLEMENT—*continued.*							
Teregeh Point	..	1	..	..	..	..	
Instruction	..	..	1	..	..	..	
SHOEBURYNESS	1	2	..	..	4	..	
ROYAL MILITARY ACADEMY ..	..	..	1	..	..	..	
ARTILLERY COLLEGE	..	..	1	..	..	..	

57—Gn No. 5132

Digitized by Google

Appendix III.—*contd.*

INSTRUCTIONS FOR THE CARE AND PRESERVATION OF RANGE-FINDERS.

1. Depression range-finders, of the following descriptions, are allowed for coast batteries having an elevation of 25 feet and upwards above high-water mark :—

Mark I.	for batteries	85 to 190 feet.
Mark Ia.	„	60 to 110 feet.
Mark Ib.	„	110 to 240 feet.
Mark Ic.	„	240 to 590 feet.
*Mark Id.	„	30 to 60 feet.
Special	„	at other heights.

2. The instruments will be taken on charge by the Officer in charge of the Armament district, who will be held responsible for their condition.

3. The range-finders *in works at home* will be periodically inspected by the Chief Inspecter of Position-finding, or an Officer deputed by him, when such inspection is recommended by the Instructor in D.R.F. at the various stations.

4. The instruments found defective after such inspection will be sent for repair, through the Chief Ordnance Officer to the Principal Ordnance Officer, Woolwich, who will transmit them to the Chief Inspector of Position-finding. The instruments will be returned through the same channel. The Chief Inspector of Position-finding will communicate direct with Officers Commanding Royal Artillery concerned, as to when these instruments are to be sent for inspection. As far as possible the inspection should be carried out during the winter months.

5. At stations abroad, when it is necessary to send range-finders home for inspection by the Chief Inspector of Position-finding, instruments should be demanded in advance to replace those it is proposed to send home. On receipt of the new instruments the defective ones should be forwarded for examination and repair.

6. A history sheet in duplicate will be prepared for each range-finder, and every transaction connected with the instrument will be entered on these sheets (*see* specimen page). One copy will accompany the instrument to which it relates on all occasions of inspection or return to store; the other will be retained by the Chief Inspector of Position-finding.

* This instrument has a screw and drum arrangement different from that of other marks.

Digitized by Google

7. When instruments in Army Ordnance charge require examination, the Chief Inspector of Position-finding is to be communicated with as to time and place of inspection.

8. When an instrument is sent to the principal ordnance officer for repair or inspection, a report of the condition of the instrument will be sent with it, thus :

(*a*) Condition of No. instrument.

(*b*) Is the instrument in good order, and does it give correct ranges?

(*c*) If not, explain reason.

9. If the instrument has been damaged, full particulars of how the damage occurred should be stated.

10. To pack the instrument for transport—

(*a*) Push the slide to the end of the bar furthest from the pivots.

(*b*) Screw up the drum to the zero position.

(*c*) Tie several turns of tape round the telescope arm and the body of the instrument so as to keep these parts from moving.

N.B.—§ In old pattern cases in which the range-finder was fixed to a wooden slide, the telescope should be removed and placed in the special box in which it was sent to the station.

11. The boxes containing the instrument and telescope should be packed in a strong box with hay, and marked "Glass with care," the lid being screwed down, not nailed.

12. The range-finder, when not in use, should be kept in a dry place.

13. Instruments, when taken out for instruction or practice, should be in the immediate charge of a qualified Officer or non-commissioned officer, and before passing out of his charge should be carefully inspected.

14. On no account should an unqualified man attempt to set up or use the range-finder.

15. The steel parts of the instrument and the large screws should be occasionally oiled, but the oil must be wiped off again ; an accumulation of oil is liable to cause particles of grit to adhere and damage the working parts.

16. The object-glass and eye-piece should be occasionally carefully cleaned with a *perfectly clean* soft piece of chamois leather, which should be used for no other purpose.

17. It is not advisable, unless absolutely necessary, to remove the object-glass or eye-piece.

18. Should it be necessary to remove the object-glass, great care must be exercised that the two lenses are replaced correctly, the marked surfaces being placed together, also that the cell is carefully screwed up into exactly the same position, and the instrument tested for collimation again.

19. If the eye-piece is removed, great care should be taken that the fine spider's web which will be then exposed is not damaged.

20. Care should be exercised in ascertaining that the distances of the datum points are correct, and it is very desirable that one

Digitized by Google

of these points should be near the extreme right, the other near the extreme left training.

21. Should the instrument when set on one datum point not give the correct distance of the other datum point the instrument should be examined to see if it is properly levelled and in adjustment. If these are correct, the distance of the datum points should be verified from a map, or application be made to the Royal Engineers to measure the distances.

57 Chatham 4061

22. The issue of instruments approved for new positions will be accompanied, in each case, by a base plate and cover.

23. These, which are somewhat similar to the head of the range-finder tripod, are secured with cement on the work.

24. Instruments once levelled on to a base plate, if carefully taken off when returning to box, will require no adjustment when again set up for use.

25. Covers with padlock will be provided for use with the base plate, to protect them from the weather. (*See* § 5514, L. of C.)

26. On no account should any attempt be made to repair the instruments locally, except under the orders of a qualified range-finding instructor or position-finder inspector. These officers will exercise their discretion as to the repairs which can be carried out locally under their own immediate supervision with the appliances available; but the nature of these repairs should be inserted in the History Sheets. Spare parts, for effecting local repairs to the instruments, by above-mentioned officers, are laid down at page 677.

57—Malta 8909

57—Ceylon 1087

2. Watkin, Field.

Watkin Field Range-finders, large, are issued to Moveable Armaments, as approved from time to time. The equipment will be the same as that given in the Vocabulary of Stores, with the exception of the picket buckets. For specimen history sheet, *see* pages 226 and 227.

54 Artillery 688

The instruments and equipment will be in charge of the Officer Commanding Royal Artillery at the place of issue, who will be responsible that the instruments are not made use of by uninstructed non-commissioned officers, and that the general rules for their care and preservation, contained in the "Manual of Field Range-finding," are attended to.

Demands will be put forward, as a rule, every two years for the exchange of the range-finding equipment, for the purpose of being inspected by the Instructor in Range-finding.

Digitized by Google

orms
849—2

SPECIMEN FORM OF

Description { Depression Range-finder. Mark
Field ,, ,,
,, Mekometer. ,,
,, Telemeter. ,,

Inspection before acceptance. *Date*

Issues and Exchanges.				
Date.	From	To	For	Date.
5.1.87	C.G.O.	C.R.A., Western District.	Service	...
20.11.87	C.R.A., Western District.	C.G.O.	Inspection ..	4.12.87
10.12.87	C.G.O.	C.R.A., Western District.	Service	...
8.6.88	C.R.A., Western District.	C.G.O.	Repair of cross wires.	20.6.88
&c.	&c.	&c.	&c.	&c.
10.1.90	C.R.A., Western District.	C G O.	Repair, blown down, placed too near gun.	30.1.90

*First line of heading will be filled in by Principal Ordnance Officer. Second line by Chief Ordnance Officer abroad, by Principal Ordnance Officer, also name of instrument Inspections by Inspecting Officer.

Digitized by Google

Army Form, G. 940.

HISTORY SHEET.

Number. Manufacturer.
" "
" "
" "

Signature of Inspecting Officer.

Inspections.			Repairs.		Signature of Officer who makes the entry.*
Occasion.	Remarks of Inspecting Officer.	Recommendation.	Date.	By.	
...	... ...	...	...	...	
Annual ...	Good order	Service ...	...	...	H. W.
...	... ...	...	...	...	
After repairs	Good order	Service ...	12.6	Smith ...	
&c.	&c.	&c.	...	...	
Inspection..	Damaged beyond repair	Struck off charge.	Authority	84 W	

Inspecting Officer. Remaining entries will be made as follows:—Issue to Batteries, or to maker who executes repairs. Return to store by Officer returning the instrument.

Digitized by Google

APPENDIX IV.

STORES FOR LABORATORY INSTRUCTION.

List of Stations and No. of Sets per Station allowed for Instruction of Royal Artillery.

(*Referred to in paragraph* 123, *Part* 2, *Section* XII.)

District or Station.	No. of Sets.
Home.	
Channel Islands	3
Eastern District	1
Ireland	2
North-Eastern District	1
Royal Military Repository, Woolwich	1
School of Gunnery, Shoeburyness	1
North-Western District	1
South-Eastern District	2
Southern District	7
Thames District (Sheerness)	2
Western District	6
Scottish District (Leith Fort)	1
Abroad.	
Barbados (St. Lucia)	1
Bermuda	2
Cape	1
Ceylon	1
Gibraltar	2
Halifax	1
Hong Kong	1
Jamaica	1
Malta	2
Mauritius	1
Singapore	1
Sierra Leone	1
St. Helena	1

Digitized by Google

APPENDIX V.

MATERIALS ALLOWED FOR PACKING HYDRAULIC BUFFERS.

Compression .... 12·5 inch to 7 inch.
Tension .... 12·5 inch casemate, dwarf, and small port 7 ft. recoil.

(*See paragraph* 517.)

Articles.	Compression Buffers.		Tension Buffers.	
	First Supply for each Buffer.	Annual Supply for five Buffers.	First Supply for each Buffer.	Annual Supply for five Buffers.
Woolwich Store Charge, No. 11.				
Cement, Scott's* ... ... lbs.	¼	½	...	...
Oil, linseed, boiled* ... ... pts.	⅛	¼	...	...
71—1 **Rings,** leather, packing, piston rod ...	...	...	1	5
5480 **Washers,** leather, packing, caps	1†	5	2	10
Tallow, Russian ... ... ,,	1½	3	1½	8
Woolwich Store Charge, No. 18.				
Flax, dressed* ... ... oz.	1	2	...	...
Rope, cotton, white, 2-inch... ... ,,	2	4	4½	9

* Not for 12·5-inch.
† 2 for 12·5-inch compression buffers.
NOTE.—For leather washers and rings for B.L. mountings, *see* Component and Spare Part.

Digitized by Google

APPENDIX VI.

TRAVERSING RACKS, TRAVERSING ARCS, AND POINTERS.

(Referred to in paragraph 105, *Part* 2.)

Table of Traversing Racks.

Nature of Slide.			Radii. A.	Radii. C.	Radii. D.	Remarks.
			ft. in.	ft. in.	ft. in.	
B.L.	12-inch		14 5	...	...	
	8-inch, barbette		...	4 9	...	
R.M.L.	12.5-inch casemate	6 feet recoil	14 5	...	...	
		7 feet recoil	15 5	...	...	
	12.5-inch dwarf	"C"	...	3 4·47	...	
		"D"	...	...	5 6	
	12.5-inch small port	6 feet recoil	14 5	...	...	
		7 feet recoil	15 5	...	...	
	7 feet parapet, "C" converted ...		...	3 4·47	...	
	dwarf "C" converted casemate ..					
	Mark III. Special; and converted small port					
	12-inch, 35 tons, dwarf "C"		...	3 4·47	...	
	9-inch, converted slide "N"		11 5·5	...	...	

Table of Traversing Arcs and Pointers for B.L. Mountings.

Nature of Service.			Arcs, traversing. No.	Arcs, traversing. Radii. A	Radii. C	Radii. D	Pointers. No.
B.L.—				ft. in.	ft. in.	ft. in.	
13·5-inch			18	...	9 11	...	Special pointer.
12-inch upper tier			1 Mk. II.	19 4¼	...	...	2
10-inch barbette ...	Mark I. "C" ...		16	...	7 9	...	1
	" I. "D" ...		15	...	...	5 10	1
	" II. and III.		25	...	9 5	...	1
10-inch disappearing	" I. ...		22	...	*7 11	...	Special pointer.
	" II. ...		22	...	7 11	...	Special pointer.
	" III. ...		24	...	10 9⅞	...	9 left. 10 right.
9·2-inch barbette ...	" I. ...		16	...	7 9	..	1
	" II.		25	...	9 5	...	1
9·2-inch disappearing	" I.		21	...	*7 2½	...	Special pointer.
	" II.		...	...	...	...	
8-inch barbette, Mark I.			19	...	6 4½	...	1
6-inch " " I.			26	...	5 4½	...	Special pointer
6-inch Vavasseur C P., Mark I.			23	...	*3 4	...	"
6-inch disappearing	Marks I. and III. ...		15	...	5 10	...	1
	" II. and II.* ...		15	...	5 10	...	3
	Mark IV.		15	...	5 10	...	4

* Double arcs.

Digitized by Google

Appendix VI.—*continued.*

Table of Traversing Arcs and Pointers for R.M.L. and R.B.L. Mountings.

Nature of Service.	Arcs, traversing.				Pointers.
	No.	Radii.			
		A	C.	D	No.
R.M.L.		ft. in	ft. in.	ft. in.	
17·72-inch	29	...	5 10·625	...	Special pointer.
16-inch	...	...	...	...	
12·5-inch — casemate, 6 and 7 feet recoil	1 Mk. II.	19 4¼	...	...	1
12·5-inch — dwarf "C" and "D" 7 ft. parapet "C" and converted small port	17	...	6 9	6 9	1
12-inch, 35-ton, dwarf "C"	17	...	6 9	...	1
11-inch or 12-inch 25 tons — casemate	5 Mk. II.	21 4¾	...	...	5
11-inch or 12-inch 25 tons — dwarf "A" ...	5 Mk. II.	21 4¾	...	...	
11-inch or 12-inch 25 tons — " "C," and " 7 ft. parapet "C"	16	...	7 9	...	1
10·4-inch	27	14 6	...	...	1
10-inch casemate, and dwarf "A," except casemate side, and to work within length, Mark I.	5 Mk. II.	21 4¾	...	...	1
10-inch — casemate, side, and to work within length, Mark I.	5 Mk. II.	21 4¾	...	...	5
10-inch — dwarf "C" and 7 ft. parapet "C."	16	...	7 9	...	1
10-inch — casemate on turntables ...	20	R P. 17 4½ L.P. 17 1⅜	...	...	
9-inch — casemate, except single plate	6 Mk. II.	20 0	...	...	5
9-inch — casemate, single plate and dwarf "A."	6 Mk. II.	20 0	...	...	1
9-inch — dwarf "C" and "D," and 7 ft. parapet "C"	15	...	5 10	5 10	1
high angle — Mark I. ...	28	...	6 0	...	Special pointer.
high angle — " II. ...	19	...	5 10	...	1
high angle — " III. ...	15	...	5 10	...	8
Moncrieff, Mark II., "D"	16	...	...	7 9	1
7-inch — casemate, Mark I.	6 Mk. II.	20 0	...	...	5
7-inch — dwarf "C"	17	...	6 9	...	1
7-inch — Moncrieff Mark I., "D"	17	...	...	6 9	5
7-inch — Moncrieff " II., "D"	17	...	...	6 9	1
R.B.L.					
7-inch Moncrieff, Mark II.	15	...	...	5 10	5

Digitized by Google

APPEN-

TABLE OF RACERS, PIVOT

38407
Equip.
1537

(1) RACERS AND PIVOT

(*Referred to in*

Nature of Slide.	Description of Racer.
12-inch upper tier	steel, without flange ... ...
12-inch lower ,, ...	steel flanged ... ...
10-inch barbette Mark I "C" ...	steel, without flange ... ...
10-inch barbette Mark I "D" ...	steel coned ... ...
10-inch barbette Mark II ...	,, ,, ...
10-inch barbette Mark III ...	,, ,, ...
10-inch disappearing Mark I ...	,, ,, ...
10-inch disappearing Mark II ...	combined roller path, clip ring, and traversing rack ... ...
10-inch disappearing Mark III ...	steel flanged ... ...
9·2-inch barbette Mark I ...	,, ,, ... inner outer
9·2-inch barbette Mark II ...	steel, coned ... ...
9·2-inch disappearing Mark I ...	,, flanged ... ...
9·2-inch disappearing Mark II ...	combined roller path, clip ring, and traversing rack ... ...
8-inch, barbette, Mark I	steel, flanged ... ...
6-inch, barbette, Mark I	racer and traversing rack combined, rear segment roller ring, ... front
6-inch, V.C.P., Mark I	combined roller path, clip ring, and traversing rack ... ...
6-inch, disappearing, Mark I	pivot plate, with roller path ... ...
6-inch ,, ,, II & II* III & IV.	steel, flanged ... ...
	combined roller-path, clip ring, and traversing rack ... ...

Digitized by Google

DIX VII.

BLOCKS, AND PIVOT PLUGS.

BLOCKS FOR B.L. GUNS.

paragraph 105, *Part* 2, *Section* XII.)

Racers.					Pivot Block.		
Radii.							
A.		C.	D.		No.	Total Height.	Pivot Plugs.
Front.	Rear.		Front.	Rear.			
ft. in.	ft. in.	ft. in.	ft. in.	ft. in.		ft. in.	
9 2	—	—	—	—	—	—	
—	18 0	—	—	—	—	—	
9 2	21 2	—	—	—	—	—	
—	—	5 11·13	—	—	23	3 10·423	
—	—	—	9 6	3 8·25	24	3 10·5	
—	—	10 10	—	—	29	4 10·584	
—	—	10 10	—	—	30	5 11·25	
—	—	6 0	—	—	—	—	
—	—	14 6	—	—	25	1 9	
—	—	9 9·25	—	—	—	5 9	
—	—	10 2·75	—	—			
—	—	5 11·13	—	—	22	3 10·423	
—	—	10 10	—	—	29	4 10·423	
—	—	5 6	—	—	—	—	
—	—	13 6	—	—	25	1 9	
—	—	5 6·05	—	—	27	2 0	
—	—	3 9	—	—	—	—	
—	—	2 3·25	—	—	—	—	
—	—	5 0	—	—	26	1 9	
—	—	4 4	—	—	—	—	

The plugs are practically a part of the block.

Digitized by Google

Appendix VII.

(1) Racers, Pivot Blocks, and Pivot

Nature of Slide.	Description of Racer.
B.M.L.	
12·5-inch { casemate, and small port 7 feet recoil, and casemate, 6 feet recoil, Mark III special	steel coned, without flange ...
12·5-inch { casemate, 6 feet recoil, Mark II and III, and small port, 6 feet recoil	,, ,, ,, ,, ...
12·5-inch { dwarf, "C," 7 feet parapet "C," and converted small port	,, ,, ,, ,, ...
12·5-inch { dwarf "D"	,, ,, ,, ,, ...
12-inch, 35 tons, dwarf "C"	,, ,, ,, ,, ...
11-inch, or 12-inch, 25 tons { casemate, and dwarf "A" ...	steel flanged ... ...
11-inch, or 12-inch, 25 tons { dwarf "C," and 7 feet parapet "C"	,, ,, ...
10·4-inch	iron flanged ... ...
10-inch { casemate, dwarf "A," small port, ...	steel flanged ... ...
10-inch { dwarf "C," and 7 feet parapet "C," Mark I	,, ,, ...
10-inch { 7 feet parapet "C," Mark II	,, ,, ...
10-inch { dwarf "D"	,, ,, ...
9-inch { casemate, and dwarf "A"	iron flanged ... ...
9-inch { dwarf { "C," and 7 feet parapet "C," Mark I ..	,, ,, ...
9-inch { dwarf { 7 feet parapet "C," Mark III	,, ,, ...
9-inch { dwarf { "D"	,, ,, ...
9-inch { high angle { Mark I	combined roller path, clip ring, and traversing rack ... ...
9-inch { high angle { ,, II	steel angle ... ...
9-inch { high angle { ,, III	combined roller path, clip ring, and traversing rack ... ...
9-inch { Moncrieff, Mark II, "D"	iron, flat ... ...
9-inch { converted slide N	,, ,, ...
7-inch { casemate, and dwarf "A"	,, ,, ...
7-inch { dwarf "C"	,, flanged ... ...
7-inch { Moncrieff { Mark I, "D"	,, without flange ... ...
7-inch { Moncrieff { ,, II, "D"...	,, flat ... ...
7-inch { 6½ ton, converted slide N	... ...
7-inch { dwarf, "D"	iron flat ... ...
64-pr., Moncrieff { Mark II, "C"	,, ,, ...
64-pr., Moncrieff { ,, II, "D"	,, ,, ...
R.B.L. 7-inch, Moncrieff, Mark II, "D"	,, ,, ...

Digitized by Google

—continued.

Plugs for R.B.L. and R.M.L Guns.

Racers.					Pivot Block.		Pivot Plugs.				Remarks.
Radii.											
†A.		C.	D.		No.	Total Height.	No.	Length.	Diameter.	Material.	
Front.	Rear.		Front.	Rear.							
ft. in.	ft. in.	ft. in.	ft. in.	ft. in.		ft. in.		in.	ins.		
10 2	21 2	—	—	—	—	—	—	—	—	—	
10 2	20 2	—	—	—	—	—	—	—	—	—	
—	—	5 8	—	—	—	—	1	*8·5	5·82	steel	
—	—	—	8 0	3 8	—	—	1	*8·5	5·82	,,	
—	—	5 8	—	—	—	—	1	*8·5	5·82	,,	
8 0	18 0	—	—	—	—	—	—	—	—	—	
—	—	5 8	—	—	—	—	1	*8·5	5·82	steel	
—	‡12 10·88	—	—	—	28	3 5	—	—	—	—	
8 0	18 0	—	—	—	—	—	—	—	—	—	
—	—	5 8	—	—	1	4 9·625	1	*8·5	5·82	steel	
—	—	5 8	—	—	11	2 5·75	1	*8·5	5·82	,,	
—	—	—	9 0	3 0	—	—	1	*8·5	5·82	,,	
6 3	16 6	—	—	—	—	—	—	—	—	—	
—	—	5 5·75	—	—	2	4 4·75	1	*8·5	5·82	steel	
—	—	5 5·75	—	—	31	4 4·75	1	*8·5	5·82	,,	
—	—	—	9 0	2 3·75	2	4 4·75	1	*8·5	5·82	,,	
—	—	4 9	—	—	—	—	—	—	—	—	
—	—	5 5·75	—	—	12	2 10·058	—	—	—	—	
—	—	4 4	—	—	—	—	—	—	—	—	
—	—	—	11 10	6 2	6	2 11	6	13·5	4·0	steel	
5 1	13 6	—	—	—	5	3 8·75	5	13·5	3·0	,,	
6 3	16 6	—	—	—	—	—	—	—	—	—	
—	—	5 5·75	—	—	2	4 4·75	11	*8·5	5·82	steel	
—	—	—	8 35	5 8·5	—	—	—	—	—	—	Fixed plug.
—	—	—	9 10	5 7·5	7	1 11½	7	10·75	3·5	steel	
5 1	13 6	—	—	—	5	3 8·75	5	13·5	3 0	,,	
—	—	—	9 0	2 3·75	2	4 4·75	1	*8·5	5·82	,,	
—	—	6 10	—	—	8	2 0	8	9·5	2·5	,,	
—	—	—	8 11	4 8·5	8	2 0	8	9·5	2·5	,,	
—	—	—	8 11	4 8·5	8	2 0	8	9·5	2·5	,,	

* 24-pr. cast-iron S.B. guns are used as sockets for pivot plugs, the sizes given being for this nature; but 18-pr. cast-iron guns can also be used, pivot plugs being 7·5 inches long, and 5·29 inches diameter, to suit.

† Casemate or dwarf. ‡ Special pivot.

Digitized by Google

Appendix

(1) Racers, Pivot Plugs, and Pivot

Nature of Slide.	Description of Racer.	Radii of Racers.							
		**A.		B.		C.	D.	
		Front.	Rear.	Front.	Rear.	Central.	Front.	Rear.
Mediums,		ft. in.	ft. in.	ft. in.	ft. in.	ft. in.	ft. in.	ft. in.
No. 1 ...	iron, flanged	5 0	14 0	—	—	—	—	—
,, 2 ...	,, ,,	5 0	14 0	—	—	—	—	—
,, 3 ...	,, ,,	5 0	14 0	—	—	—	—	—
,, 4 ...	metal, ,,	—	—	1 7·5	8 7·5	—	—	—
,, 5 ...	,, ,,	—	—	1 5	6 10	—	—	—
,, 6 ...	,, ,,	—	—	1 6	6 10	—	—	—
,, 7 ...	iron ,,	—	—	—	—	6 1	—	—
,, 8 ...	,, ,,	5 0	16 6	—	—	6 1	—	—
,, 9 ...	,, ,,	—	—	—	—	6 1	9 0	3 4·25
,, 10 ...	,, ,,	5 0	14 0	—	—	—	—	—
,, 11 ...	,, ,,	—	—	—	—	6 1	9 0	3 4·25
,, 12 ...	,, ,,	5 0	16 6	—	—	—	—	—
,, 13 ...	,, ,,	5 0	14 0	—	—	—	—	—
,, 14 ...	,, ,,	5 0	16 6	—	—	—	—	—
,, 15† ...	,, ,,	—	—	—	—	—	—	—
,, 16 ...	,, ,,	—	—	—	—	6 1	9 3	3 4·25
,, 17 ...	,, ,,	5 0	16 6	—	—	—	—	—
,, 18 ...	,, ,,	—	—	—	—	6 1	9 3	3 4·25
,, 19 ...	,, ,,	5 0	16 6	—	—	—	—	—
,, 20 ...	,, ,,	5 0	16 6	—	—	—	—	—
,, 21 ...	,, ,,	5 0	16 6	—	—	6 1	—	—

** Casemate or dwarf.
† Fired from ground platform.

Digitized by Google

VII.—*continued.*

BLOCKS FOR MEDIUM SLIDES "L."

E.		F.		Pivot Plugs.				Pivot Block.	Remarks.
Front.	Rear.	Front.	Rear.	No.	Length.	Diameter.	Material.	No.	
ft. in.	ft. in.	ft. in.	ft. in.		in.	in.			
—	—	—	—	—	—	—	—	—	
—	—	—	—	—	—	—	—	—	
—	—	—	—	—	—	—	—	—	
—	—	—	—	10	5	2·5	steel	—	
—	—	—	—	—	—	—	—	—	
—	—	—	—	11	7·5	2·0	steel	—	
10 8·25	2 2	12 10	2 2	3	5·75	4·0	,,	3	
10 8·25	2 2	12 10	2 2	3	5·75	4·0	,,	3	
10 8·25	2 2	12 10	2 2	3	5·75	4·0	,,	3	
—	—	—	—	—	—	—	—	—	
10 8·25	2 2	12 10	2 2	12	7·5	3·0	steel	*3 II	*Bushed.
—	—	—	—	—	—	—	—	—	
—	—	—	—	—	—	—	—	—	
—	—	—	—	—	—	—	—	—	
—	—	—	—	—	—	—	—	—	
10 8·25	2 2	12 10	2 2	4	7·5	3·0	steel	4	
—	—	—	—	—	—	—	—	—	
10 8·25	2 2	12 10	2 2	4	7·5	3·0	steel	*3 I	*Bushed.
—	—	—	—	—	—	—	—	—	
—	—	—	—	—	—	—	—	—	
10 8·25	2 2	12 10	2 2	3	5·75	4·0	steel	3	

Digitized by Google

APPEN

TOOLS FOR VENTING AND REPAIRING

See paragraph

List of Tools for Venting and Repairing Service, R.B.L., R.M.L.,

Articles.	Ordnance, S.B. Guns, Carronades, and Howitzers. 8-inch.	68-pr.	32-pr.	24-pr.	12-pr.	R.B.L. Gun. 40-pr. side closing.
VENTING.						
Woolwich Store Charge, No. 7.						
Braces, ratchet — 12-inch	—	—	—	—	—	*a*
Braces, ratchet — Posts — 29-inch	*a*	*a*	*a*	*a*	*a*	—
Braces, ratchet — Posts — 20-inch	—	—	—	—	—	*a*
Files — bastard, safe edge, 14-inch (with handle)	*a*	*a*	*a*	*a*	*a*	*a*
Files — smooth, safe edge, 10-inch (with handle)	—	—	—	—	—	*a*
Hammers, fitters' — 24 oz.	*a*	*a*	*a*	*a*	*a*	*a*
Hammers, fitters' — 8 „	*a*	*a*	*a*	*a*	*a*	*a*
Woolwich Store Charge, No. 10.						
Chests, tool, empty, venting siege train — No. 1	—	—	—	—	—	*a*
Chests, tool, empty, venting siege train — „ 3*	—	—	—	—	—	*a*
Apparatus, venting, R.M.L. converted guns. — Blocks — expanding	—	—	—	—	—	—
Apparatus, venting, R.M.L. converted guns. — Blocks — pulley, double	—	—	—	—	—	—
Apparatus, venting, R.M.L. converted guns. — Blocks — 4-in. treble	—	—	—	—	—	—
Apparatus, venting, R.M.L. converted guns. — Blocks — Stop	—	—	—	—	—	—
Apparatus, venting, R.M.L. converted guns. — Cutters, rose	—	—	—	—	—	—
Apparatus, venting, R.M.L. converted guns. — Cylinders, guide	—	—	—	—	—	—
Apparatus, venting, R.M.L. converted guns. — Falls	—	—	—	—	—	—
Apparatus, venting, R.M.L. converted guns. — Frames, trunnion	—	—	—	—	—	—
Apparatus, venting, R.M.L. converted guns. — Gyns, triangle, 10 feet	—	—	—	—	—	—
Apparatus, venting, R.M.L. converted guns. — Monkeys	—	—	—	—	—	—
Apparatus, venting, R.M.L. converted guns. — Rods, with hook	—	—	—	—	—	—
Apparatus, venting, R.M.L. converted guns. — Wedges	—	—	—	—	—	—
Braces, — smiths	*a*	*a*	*a*	*a*	*a*	*a*
Braces, — „ Drills, vent	—	—	—	—	—	—
Braces, — „ Rimers, vent — long	—	—	—	—	—	—
Braces, — „ Rimers, vent — short	*a*	*a*	*a*	*a*	*a*	*a*
Braces, — ratchet, 20-inch	*a*	*a*	*a*	*a*	*a*	—
Braces, ratchet, 20-inch, Drills. — cone vent — ⅜-inch	—	—	—	—	—	—
Braces, ratchet, 20-inch, Drills. — cone vent — G.	*a*	*a*	*a*	*a*	*a*	—
Braces, ratchet, 20-inch, Drills. — cone vent — G1	—	—	—	—	—	—
Braces, ratchet, 20-inch, Drills. — drifting vent — ⅛-inch	—	—	—	—	—	—
Braces, ratchet, 20-inch, Drills. — drifting vent — E	*a*	*a*	*a*	*a*	*a*	—
Braces, ratchet, 20-inch, Drills. — drifting vent — E1	—	—	—	—	—	—
Braces, ratchet, 20-inch, Drills. — drifting vent — E2	—	—	—	—	—	—
Braces, ratchet, 20-inch, Drills. — drifting vent — E3	—	—	—	—	—	—
Braces, ratchet, 20-inch, Drills. — drifting vent — E4	—	—	—	—	—	—

a Common to all these.

Digitized by Google

DIX VIII.

R.B.L., R.M.L. AND S.B. ORDNANCE.

201, *Part 2.—Section* XII.

and S.B. Ordnance, showing what are required for each nature.

ORDNANCE, R.M.L.																																Remarks.
Guns.																									Howitzers.								
12·5-in., Mark I.	12-in.	11-in.	10-in.	9-in.	7-in.	64-pr., 64-cwt., Marks I. II. & III.	64-pr., 58- and 71-cwt. Converted.	80-pr.	6·6-in.	40-pr.	25-pr.	16-pr.	13-pr.	9-pr.	7-pr.	2·5-in.	8-in. 70- & 46-cwt.	6·6-in.	6·3-in.	
a							—	—	a	a	a	a	a	a	a	a	a	a	a	
a	a	—	—	—	—	—	—	—	—	—	—	—	—	—	—	—	—	—	—	
a	a	a	a	a	a	a	a	a	a	a	a	a	a	a	a	a	a	a	a	The "large" file handle is required for each of these files.
a	a	a	a	a	a	a	a	a	a	a	a	a	a	a	a	a	a	a	a	
a	a	a	a	a	a	a	a	a	a	a	a	a	a	a	a	a	a	a	a	
a	a	a	a	a	a	a	a	a	a	a	a	a	a	a	a	a	a	a	a	
—	—	—	—	—	—	—	—	—	a	a	a	—	—	—	—	—	a	a	a	
—	—	—	—	—	—	—	—	—	a	a	a	—	—	—	—	—	a	a	a	* Containing vents copper, 7¼-in., 18, 10¼-in., 30.
—	—	—	—	—	—	—	1	1	—	—	—	—	—	—	—	—	—	—	—	
—	—	—	—	—	—	—	a	a	—	—	—	—	—	—	—	—	—	—	—	
—	—	—	—	—	—	—	a	a	—	—	—	—	—	—	—	—	—	—	—	
—	—	—	—	—	—	—	1	1	—	—	—	—	—	—	—	—	—	—	—	
—	—	—	—	—	—	—	a	a	—	—	—	—	—	—	—	—	—	—	—	
—	—	—	—	—	—	—	a	a	—	—	—	—	—	—	—	—	—	—	—	
—	—	—	—	—	—	—	a	a	—	—	—	—	—	—	—	—	—	—	—	
—	—	—	—	—	—	—	a	a	—	—	—	—	—	—	—	—	—	—	—	
—	—	—	—	—	—	—	a	a	—	—	—	—	—	—	—	—	—	—	—	
—	—	—	—	—	—	—	a	a	—	—	—	—	—	—	—	—	—	—	—	
—	—	—	—	—	—	—	a	a	—	—	—	—	—	—	—	—	—	—	—	
a	a	a	a	a	a	a	a	a	a	a	a	a	a	a	a	a	a	a	a	
—	—	—	—	—	—	—	a	a	—	—	—	—	—	—	—	—	—	—	—	
a	a	a	a	a	a	a	a	a	—	—	—	—	—	—	—	—	—	—	—	15 in. × 0·22 in
—	—	—	—	—	—	—	—	—	a	a	a	a	a	a	a	a	a	a	a	
a	a	a	a	a	a	a	a	a	—	—	—	—	—	—	—	—	—	—	—	
—	—	—	—	—	—	—	—	—	—	—	—	—	—	—	a	a*	—	—	—	* Not required for Mark II gun.
a	a	a	a	a	—	—	—	—	—	—	—	—	—	—	—	—	—	—	—	
—	—	—	—	—	a	a	—	—	—	—	—	—	—	—	—	—	—	—	—	
—	—	—	—	—	—	—	a	a	—	—	—	—	—	—	a	a	—	—	—	
—	—	—	—	a	—	—	—	—	—	—	—	—	—	—	—	—	—	—	—	
—	—	—	a	—	—	—	—	—	—	—	—	—	—	—	—	—	—	—	—	
a	a	a	—	—	—	—	—	—	—	—	—	—	—	—	—	—	—	—	—	

Digitized by Google

Tools for Venting and Repairing R.B.L.,

Articles.	Ordnance, S.B. Guns, Carronades, and Howitzers. 8-inch.	68-pr.	32-pr.	24-pr.	12-pr.	R.B.L. Gun. 40-pr. side closing.
VENTING.—*continued.*						
Woolwich Store Charge, No. 10—continued.						
Braces, ratchet, 20-inch, Drills. tapping vent: $\frac{1}{8}$-inch	—	—	—	—	—	—
B	*a*	*a*	*a*	*a*	*a*	—
B1	—	—	—	—	—	—
B2	—	—	—	—	—	—
B3	—	—	—	—	—	—
B4	—	—	—	—	—	—
Braces, ratchet, 20-inch: Drills, vent, hollow: $\frac{5}{8}$-inch	—	—	—	—	—	—
A	*a*	*a*	*a*	*a*	*a*	—
A1	*a*	*a*	*a*	—	—	—
Sockets	*a*	*a*	*a*	*a*	—	—
Braces, ratchet Drills. cone, vent, $1\frac{1}{8}$ in.	—	—	—	—	—	*a*
drifting, vent: 4-in.	—	—	—	—	—	*a*
10 ,,						
tapping, vent: 4 ,,	—	—	—	—	—	*a*
10 ,,						
vent, hollow, $1\frac{1}{8}$-in.	—	—	—	—	—	*a*
Brushes, gun, soft, small	*a*	*a*	*a*	*a*	*a*	*a*
Chisels cold, flat (set of 5)	*a*	*a*	*a*	*a*	*a*	*a*
graver (set of 3)	*a*	*a*	*a*	*a*	*a*	*a*
Drifts, steel, vent, square: $\frac{5}{8}$-inch	—	—	—	—	—	—
6 ,,	—	—	—	—	—	*a*
8 ,,						
$10\frac{1}{2}$,,						
F	*a*	*a*	*a*	*a*	*a*	—
F1						
F2						
F3						
F4						
F5	—	—	—	—	—	—
Gauges, vent: 15-inch (set of 4)	—	—	—	—	—	*a*
long	—	—	—	—	—	*a*
short	*a*	*a*	*a*	*a*	*a*	—
Gouges, cold, 9 in. × 1 in.	*a*	*a*	*a*	*a*	*a*	*a*
Rimers, cone vent: $\frac{1}{8}$-inch	—	—	—	—	—	—
$1\frac{1}{8}$-inch	—	—	—	—	—	*a*
H	*a*	*a*	*a*	*a*	*a*	—
H1	—	—	—	—	—	—
Saws, cutting metal, 14-inch, special	*a*	*a*	*a*	*a*	*a*	*a*
Taps, vent, bush: $\frac{5}{8}$-inch	—	—	—	—	—	—
$1\frac{1}{8}$,, (set of 3)	—	—	—	—	—	*a*
long C3	—	—	—	—	—	—
long C4						
long C5						

a. Common to all these.

Digitized by Google

R.M.L. and S.B. Ordnance—*continued.*

| Ordnance, R.M.L. | | |

Tools for Venting and Repairing R.B.L.,

Articles.	Ordnance, S.B. Guns, Carronades, and Howitzers. 8-inch.	68-pr.	32-pr.	24-pr.	12-pr.	R.B.L. Gun. 40-pr. side closing.
VENTING—*continued.*						
Woolwich Store Charge, No. 10—continued.						
Taps, vent, bush: short C1, C2, C3, C4, C5	*a*	*a*	*a*	*a*	*a*	—
Taps, vent, bush: D3, D4, D5	*a*	*a*	*a*	*a*	*a*	—
Wires, directing: 48-inch	*a*	*a*	*a*	*a*	*a*	—
Wires, directing: 18 ,,	—	—	—	—	—	*a*
Wrenches: taps and vents, large	—	—	—	—	—	*a*
Wrenches: taps and vents, small	—	—	—	—	—	—
Wrenches: taps, vent bush	*a*	*a*	*a*	*a*	*a*	—
Wrenches: vent bush	*a*	*a*	*a*	*a*	*a*	—
Woolwich Store Charge, No. 29.						
Instruments, taking impressions, vents: No. 1	*a*	*a*	*a*	*a*	—	—
Instruments, taking impressions, vents: ,, 2	—	—	—	—	—	*a*
Instruments, taking impressions, vents: Blocks, adjusting, No. 1	1	1	1	1	—	—
Instruments, taking impressions, vents: Blocks, adjusting, ,, 2	—	—	—	—	—	1
Instruments, taking impressions, vents: Pieces, lengthening, No. 1, 4 ft.	—	—	—	—	—	—
Instruments, taking impressions, vents: Plates, No. 1, A	*a*	*a*	—	—	—	—
Instruments, taking impressions, vents: Plates, No. 1, B	—	—	*a*	*a*	—	—
Instruments, taking impressions, vents: Plates, No. 1, C	—	—	—	—	—	—
REPAIRING.						
Woolwich Store Charge, No. 7.						
Chests, stocks and dies, Whitworth thread, 1¼-inch to ¼-inch	—	—	—	—	—	*a*
Braces, ratchet: 12-inch, Drills	—	—	—	—	—	*a*
Braces, ratchet: 9 ,,	—	—	—	—	—	*a*
Braces, ratchet: Posts, 20-inch	—	—	—	—	—	*a*
Files, bastard, round: 16-inch (with handle)	—	—	—	—	—	*a*
Files, bastard, round: 12 ,, (with handle)	—	—	—	—	—	*a*
Files, repairing ordnance, fish-backed: bastard, 14-inch	—	—	—	—	—	*a*
Files, repairing ordnance, fish-backed: bastard, 12 ,,	—	—	—	—	—	*a*
Files, repairing ordnance, fish-backed: smooth, 14 ,,	—	—	—	—	—	*a*
Files, repairing ordnance, fish-backed: smooth, 12 ,,	—	—	—	—	—	*a*

a. Common to all these.

Digitized by Google

R.M.L. and S.B. Ordnance—*continued.*

Ordnance, R.M.L.																																		Remarks.
Guns.																													Howitzers.					
12·5-in., Mark I.	12-in.	11-in.	10-in.	9-in.	7-in.	64-pr., 64-cwt., Marks I, II. & III.	64-pr., 58- and 71-cwt. Converted.	80-pr.	6·6-in.	40-pr.	25-pr.	16-pr.	13-pr.	9-pr.	7-pr.	2·5-in.	8-in. 70- & 46-cwt.	6·6-in.	6·3-in.	
—	—	—	—	a	a	a	a	a	—	—	—	—	—	—	—	—	—	—	—	
—	—	—	—	—	—	—	a	a	—	—	—	—	—	—	—	—	—	—	—	For C.I. ordnance with vent bushes, having 6 threads per inch.
a	a	a	a	a	a	a	a	a	—	a	a	a	a	a	a	a	a	a	a	
—	—	—	—	—	—	—	—	—	a	a	a	a	a	a	—	—	—	—	—	
—	—	—	—	—	—	—	—	—	a	a	a	a	a	a	—	—	—	—	—	
a	a	a	a	a	a	a	a	a	—	—	—	—	—	—	a	a	—	—	—	
a	a	a	a	a	a	a	a	a	—	—	—	—	—	—	—	—	—	—	—	
a	a	a	a	a	a	a	a	a	—	—	—	—	—	—	—	—	—	—	—	
1	1	1	1	1	1	2*	a	a	—	a	a	a	a	a	a	a	—	a	a	a	With plate.
—	—	—	—	—	—	—	—	—	1	1	1	1	—	—	—	—	2†	1	1	* 1 block for Mark I and 1 for Marks II and III.
a	a	a	a	—	—	—	—	—	—	—	—	—	—	—	—	—	—	—	—	† 1 for each nature.
a	a	a	a	a	a	—	—	—	—	—	—	—	—	—	—	—	—	—	—	
—	—	—	—	—	—	a	—	—	—	—	—	—	—	—	—	—	—	—	—	
—	—	—	—	—	—	—	a	a	—	—	—	—	—	—	—	—	—	—	—	
a	a	a	a	a	a	a	a	a	a	a	a	a	a	a	a	—	a	a	a	
a	a	a	a	a	a	a	a	a	a	a	a	a	a	a	a	—	a	a	a	
a	a	a	a	a	a	a	a	a	a	a	a	a	a	a	a	—	a	a	a	
a	a	a	a	a	a	a	a	a	a	a	a	a	a	a	a	—	a	a	a	
a	a	a	a	a	a	a	a	a	a	a	a	a	a	a	a	—	a	a	a	The "large" file handle is required for each of these files.
a	a	a	a	a	a	a	a	a	a	a	a	a	a	a	a	—	a	a	a	
a	a	a	a	a	a	a	a	a	a	a	a	a	a	a	a	—	a	a	a	
a	a	a	a	a	a	a	a	a	a	a	a	a	a	a	a	—	a	a	a	
a	a	a	a	a	a	a	a	a	a	a	a	a	a	a	a	—	a	a	a	

Digitized by Google

Tools for Venting and Repairing R.B.L.,

Articles.	Ordnance, S.B. Guns, Carronades, and Howitzers. 8-inch.	68-pr.	32-pr.	24-pr.	12-pr.	R.B.L. Gun. 40-pr. side closing.
REPAIRING—*continued.*						
Woolwich Store Charge, No. 10—continued.						
Drifts, steel, square ... ... sets	—	—	—	—	—	*a*
Rimers, socket, drop sight...	—	—	—	—	—	*a*
Sets, socket. drop sight	—	—	—	—	—	*a*
Woolwich Store Charge, No. 11.						
Machines, rifling, hand, R.M.L. { guns	—	—	—	—	—	—
howitzers	—	—	—	—	—	—

a. Common to all these.

Digitized by Google

R.M.L. and S.B. Ordnance—*continued.*

| Ordnance, R.M.L. | | |

Appendix VIII.—*continued.*

TOOLS FOR FACING R.B.L. GUNS.

38407
Equip.
1463

Packed in a Chest.

Tools, facing, R.B.L.—	7-inch. Letter.	7-inch. No.	40-pr. Letter.	40-pr. No.	20-pr. Letter.	20-pr. No.	12 or 9-pr. Letter.	12 or 9-pr. No.
Blocks	F 1	1	E	1	G	1	D	1
	G	1	F 1	1	I 1	1	F 1	1
	—	—	F 2	1	I 2	1	F 2	1
	K	1	H	1	L	1	J	1
	—	—	G	1	K	1	I	1
	—	—	M	1	M	1	C	1
Collars	—	—	B O	set of 2	—	—	—	—
Cutters	E 1	set of 2	D	1	F	1	K	1
	E 2	,,	—	—	J	1	G	1
	H H	,,	—	—	J 1	1	G 1	1
	—	—	—	—	H	1	E	1
Guards, wood	O	1	—	—	P	1	S	1
Guides—								
Breech-screw	C	set of 2	A	set of 2	C	set of 2	M	set of 2
Powder chamber	D 1	1	ex. C	1	D 1	1	N 1	1
	—	—	—	—	D 2	1	N 2	1
Wood	—	—	N	1	Q	1	R	1
Handles	P	1	P	1	—	—	—	—
Keys	—	—	—	—	N	1	O	1
Levers	B	1	J	1	B	1	B	1
Punches	N	1	L	1	R	1	P	1
	—	—	K	1	—	—	—	—
Spindles	A	1	I	1	A	1	A	1
Washers, stop	—	—	Q	1	—	—	1	—
	J J	set of 2	—	—	E E	set of 2	L L	set of 2
Wrenches	M	1	R	1	O	1	Q	1

TOOLS FOR RE-COPPERING B.L. AND S.B.B.L. GUNS.

Packed in a Chest.

Tools, re-coppering—	B.L. 8-inch. Mark VII.	B.L. 6-inch. Mark V.	S.B. B.L. 32-pr.
Blocks—			
Guide	1	1	1
No. 1	1	1	1
,, 2	1*	1*	1
,, 3	1	1	1
,, 4	—	1	1
,, 5	1	1	1
,, 6	1	—	—
Cups, obturating	1	1	1
Cutters	3	3	2
Drifts	1	1	1
Spindles	1	1	1
Wrenches	1	1	set of 3

38407
Equip.
1457

* With bronze guide.

Digitized by Google

APPENDIX IX.

CHEST, TOOL, FILLED, No. 3D.

(Repairing Wrought-iron Garrison Carriages and Slides, L).

Articles.	No.
Woolwich Store Charge, No. 7.	
Chests, tool, empty, No. 3	1
Aprons, basil, brown	2
Braces, ratchet — 18-inch	1
18-inch, strong	1
18-inch, strong, Drills — 1½-inch	1
1⅜ "	1
1¼ "	1
1⅛ "	1
1 "	6
⅞ "	6
¾ "	6
⅝ "	6
½ "	4
⅜ "	4
¼ "	1
18-inch, strong, Drills, tapping — 1-inch	6
⅞ "	6
¾ "	6
⅝ "	6
½ "	3
⅜ "	3
Posts, 24-inch	2
Callipers — 10-inch (pair)	1
6 " (")	1
Cans, oil, lubricating, G. S.	1
Chisels — cross-cut, 8 inches × ⅜ inch	2
cross-cut, 7 " × ¼ "	3
engraving	3
hand, cold, ¾-inch × 8-inch	4
rivet head	1
Cloth, emery, fine (sheets)	6

57
Gen. No.
3377

Digitized by Google

Appendix IX.—*continued.*

Chest, Tool, Filled, No. 3D.—*continued.*

Articles.							No.	
Woolwich Store Charge, No. 7—continued.								
Compasses, wing, 10-inch .... pairs							1	
Dividers, spring, 6-inch							1	
Drifts	brass, round	¾-inch × 9-inch					1	57
		1 „ × 9 „					1	St. Lucia
	steel, round	¾ „					1	415
		⅞ „					1	
		1 „					1	
Drivers, screw, G. S., 12-in.							1	
Files	bastard	flat	16-inch				2	
			14 „				10	
			12 „				2	
			8 „				4	
			6 „				3	
		half-round	16 „				3	
			14 „				4	
			10 „				4	
			8 „				4	
			6 „				2	
		knife	5 „				2	
		round	16 „				2	
			14 „				2	
			12 „				4	
			6 „				2	
			4 „				2	
		safe edge	16 „				3	
			14 „				3	
			8 „				2	
			6 „				2	
		square	16 „				1	
			12 „				1	
			10 „				2	
		three square	16 „				2	
		warding	5 „				2	57
			cut on one side, 3½-in.				2	Vocab.
	dead smooth	half-round	4-inch				1	2785
		safe edge	4 „				1	
	rough, half-round		14 „				2	

Digitized by Google

Appendix IX.—*continued.*

Chest, Tool, Filled, No. 3D.—*continued.*

Articles.	No.
Woolwich Store Charge, No. 7—continued.	
Files, second cut, half-round, 14-inch	2
Files, second cut, safe edge, 14 „	2
Files, second cut, safe edge, 10 „	1
Files, second cut, safe edge, 6 „	1
Files, second cut, safe edge, 4 „	1
Files, smooth, half-round, 14 „	1
Files, smooth, half-round, 8 „	2
Files, smooth, half-round, 6 „	2
Files, smooth, safe edge, 12 „	1
Files, smooth, safe edge, 8 „	2
Files, smooth, safe edge, 6 „	1
Files, smooth, safe edge, 4 „	1
Flatters, smiths	1
Fullers, bottom	1
Fullers, top	1
Hammers, fitters, 48-oz., copper	1
Hammers, fitters, 24 „	1
Hammers, fitters, 8 „	2
Hammers, riveting, boiler makers, 3½-lb.	2
Hammers, riveting, boiler makers, 2½ „	2
Handles, file, large	8
Handles, file, middling	10
Handles, file, small	6
Handles, file, swan neck	1
Holders, rivet head, large	1
Holders, rivet head, small	1
Irons, soldering, tinman's	1
Levels, spirit block, 12 inches	1
Woolwich Store Charge, No. 8.	
Plates screw, 10 taps, 20-hole	1
Pliers, round nose ... pairs	1
Pliers, side cutting, 7-inch „	1
Punches, centre, 4½-inch	2
Punches, round, ⅛-in. by 10-in.	1
Punches, smiths, cold	2

Digitized by Google

Appendix IX.—*continued.*

Chest, Tool, Filled, No. 3D—*continued.*

Articles.	No.
Woolwich Store Charge, No. 8—continued.	
Rods, smiths, iron	4
Rules { Armament Artificers, 2-feet	1
{ saddletreemakers	1
Saws .... { cutting, metal, 12-in.	1
{ ,, ,, Blades 12-in. (spare)	2
Scribers	1
Snaps, riveting, rod .... { $1\frac{1}{8}$-in.	1
{ $1\frac{1}{4}$,, ...	2
{ $1\frac{3}{8}$,, ...	1
{ $1\frac{1}{8}$,, ...	2
{ 1 ,, ...	1
{ $\frac{7}{8}$,, ...	1
{ $\frac{3}{4}$,, ...	1
{ $\frac{5}{8}$,, ...	1
{ $\frac{1}{2}$,, ...	1
Spanners, Armament Artificers, double ended .... { $1\frac{1}{2}$-in. and $1\frac{3}{8}$-in.	1
{ $1\frac{1}{4}$,, ,, $1\frac{1}{8}$,, ...	1
{ 1 ,, ,, $\frac{7}{8}$,, ...	1
{ $\frac{3}{4}$,, ,, $\frac{5}{8}$,, ...	1
{ $\frac{1}{2}$,, ,, $\frac{3}{8}$,, ...	1
Spanners, Armament Artificers, socket .... { $1\frac{1}{8}$-inch	1
{ 1 ,, ...	1
{ $\frac{7}{8}$,, ...	1
{ $\frac{3}{4}$,, ...	1
{ $\frac{5}{8}$,, ...	1
{ $\frac{1}{2}$,, ...	1
Squares, smiths, steel	1
Stakes, smiths	1
Stocks, drill, bevel wheel (with bits)	1
,, ,, ,, ,, Bits (spare) .... sets	1
Stones, oil, carpenters	1
Straight edge, steel, 2 feet....	1
Tongs, wheeler-fitters .... pair	1
Vices, hand { 20-oz.....	1
{ 8 ,, ...	1

Digitized by Google

Appendix IX.—*continued.*

Chest, Tool, Filled, No. 3D—*continued.*

Articles.	No.
Woolwich Store Charge, No. 18.	
Cloths, sponge	6
Handbooks for military artificers	1
Woolwich Store Charge, No. 29.	
Clinometers, Watkin	1
The undermentioned are not carried in the Chests, and will be separately demanded, charged, and accounted for.	
Woolwich Store Charge, No. 7.	
Chests, stocks and dies, Whitworth thread, 1⅛-in. to ¼-in., filled	1
Cramp, fitters, 5-inch	2
54 Gen. No. 4711 **Grindstones** { F.S., 18-inch	1
{ 24-inch	1
Bush,§	1**
57—Chat. 3768 **Cutters,** { ⅞-inch§	1§§
{ 1⅛ „ §	1**
Holders,§	1††
Woolwich Store Charge, No. 8.	
Lead, punching, 1⅜-inch × 9¼-inch × 16-inch .... piece	1‡
Plates, surface, Armament Artificers, 3′ × 1′ 9″	1
Straight edges { 6 ft.	1
{ 4 ft.	1
Vices, standing, 80 lbs.* †	1

* As these become unserviceable they will be replaced by the "Vice, standing, 80 lbs., with iron bench."

† An Engineer supply. ‡ To be provided locally.

§ Forming the set of Tools for renewing Raising Valve seating of B.L. disappearing carriages. (See paragraph 7888 L. of Changes in W.M.)

** 9·2 inch and 10-inch Mark I. carriages only.

†† 6-inch. Marks II. to IV., and 9·2-inch and 10-inch, Mark I. carriages.

§§ 6-inch Marks II. to IV. carriages only.

Digitized by Google

Appendix IX.—*continued.*

CHEST, TOOL, FILLED, No. 4c.

(Repairing Wood Garrison Carriages and Slides L) for Armament or Garrison Artillery Artificers.

Articles.	No.
Woolwich Store Charge, No. 7.	
Chests, tool, empty, No. 4	1
Adapters, brace	2
Aprons, basil, brown....	2
Augers shell 1-inch	1
shell .... $\frac{7}{8}$ „	1
shell .... $\frac{3}{4}$ „	1
Handles 16-inch	1
Handles 13½ „	1
Bevels, steel blade, 12-inch	1
Braces carpenters	1
Braces carpenters, bits* (set of 24) .... sets	1
Chisels, firmer 1½-inch	2
Chisels, firmer 1 „	2
Drivers, screw, G. S. 24-inch	1
Drivers, screw, G. S. 12 „	1
Drivers, screw, G. S. 4 „	2
Gouges, firmer, 1-in.	1

* Detail of bits:—

Braces, carpenters, Bits	centre, 1½, 1, $\frac{7}{8}$, $\frac{3}{4}$, $\frac{5}{8}$, $\frac{1}{2}$, and $\frac{3}{8}$-inch	7
	countersink flat	1
	countersink rose	1
	dowling sash	1
	gouge, $\frac{7}{16}$, $\frac{3}{8}$, $\frac{5}{16}$, $\frac{1}{4}$, $\frac{3}{16}$, and $\frac{1}{8}$-inch	6
	nose, $\frac{5}{8}$, $\frac{5}{16}$, $\frac{1}{4}$, $\frac{3}{16}$, and $\frac{1}{8}$-inch	5
	rimer, square	1
	screwdriver	1
	taper	1
		24

Digitized by Google

Appendix IX.—*continued.*

Chest, Tool, Filled, No. 4c—*continued.*

Articles.	No.
Woolwich Store Charge, No. 8.	
Lines, carpenters	1
Pencils, carpenters	6
Planes jack, double iron	1
Planes rabbet, skew, 1½-inch	1
Planes smoothing, G. S.	1
Pots, glue, 1-pint	1
Rasps, fine flat, 10-in.	1
Rasps, fine half-round, 10-in.	1
Reels, carpenters line	1
Rules, carpenters, 2-feet	1
Saws compass	1
Saws dovetail, brass back	1
Saws hand, 24-in.	1
Spanners, McMahon, 15-in.	1
Vices, bench parallel, 40 lbs.*	1
Woolwich Store Charge, No. 11.	
Chalk, white (for line, carpenters) .... lb.	¼

* An Engineer supply.

Digitized by Google

Appendix IX.—*continued.*

CHEST, TOOL, FILLED, No. 7.

(*Farriers and Shoeing Smiths.*)

Articles.	No.
FORGE TOOLS.	
Woolwich Store Charge, No. 7.	
Chests, tool, empty, No. 7	1
Bags, tool, farriers	1
Cresses, farriers, Mark II. (set of 2)	1 sets
Cutters, anvil, half-round, farriers	2
Cutters, anvil, nail, farriers	1
Fullers, farriers	2
Hammers, farriers, pointing	1
Hammers, farriers, sledge, 9½-lb.	1
Hammers, farriers, turning	1
Woolwich Store Charge, No. 8.	
Pokers, smiths	1
Pritchels, farriers	4
Slice, farriers	1
Stakes, farriers	1
Stamps, farriers	2
Tongs, farriers, fire	1
Tongs, farriers, turning, large	1
Tongs, farriers, turning, medium	1
Tongs, farriers, turning, small	1
Woolwich Store Charge, No. 10.	
Chisels, cold, with rod handle 6″ × 1½″	2

Digitized by Google

Appendix IX.—*continued.*

Chest, Tool, Filled, No. 7.—*continued.*

Articles.	No.
SHOEING TOOLS.	
Woolwich Store Charge, No. 7.	
Aprons, basil, brown	2
Buffers, farriers	2
Hammers, farriers, shoeing....	1
Woolwich Store Charge, No. 8.	
Knives { drawing, farriers	6
Knives { searching „	2
Pincers, farriers .... pairs	1
Rasps, farriers, 16-inch	6
Woolwich Store Charge, No. 26.	
Stones, rag	1

Digitized by Google

Appendix IX.—*continued.*

CHEST, TOOL, FILLED, SPECIAL, REPAIRING R.B.L. GUNS, L.S.

Articles.	No.
Woolwich Store Charge, No. 7.	
Chests, tool, empty, special, repairing R.B.L. guns, land service	1
Braces, ratchet, 12-inch, drills (set of 11) .... sets	1
9 „	1
Cans, oil, lubricating, smiths	1
Chisels, cross cut 18 inches × ¼ inch	2
7 „ × „	1
Cloth, emery flour .... sheets	6
Drifts, steel, upsetting 7-inch	1
20-pr.	1
12 „	1
Drivers, screw bent	1
G.S., 5-inch	1
Files bastard .... feather edge, and herring bone, 6-inch	6
flat 10-inch	4
8 „	4
half-round 10 „	1
6 „	1
knife .... 9 „	1
8 „	1
6 „	3
parallel, 2 safe sides, ¼-in. × ⅛-in., 6-inch....	1
round 12-inch	2
8 „	2
6 „	1
5 „	1
safe edge 12 „	1
10 „	1
square.... 10 „	2
8 „	1
warding 5 „	2
cut on one side, 3½-inch	2
second cut one safe side, square 8-inch	1
taper 6 „	1
safe edge, 8-inch	1

Digitized by Google

Appendix IX.—*continued.*

Chest, Tool, Filled, Special, Repairing, R.B.L. Guns, L.S.—*continued.*

Articles.	No.
Woolwich Store Charge, No. 7—continued.	
Files, smooth — half-round — 8-inch	1
Files, smooth — half-round — 6 ,,	1
Files, smooth — half-round — 4 ,,	1
Files, smooth — knife, 6-inch	3
Files, smooth — safe edge — 12 inch	1
Files, smooth — safe edge — 10 ,,	1
Files, smooth — safe edge — 8 ,,	1
Files, smooth — safe edge — 4 ,,	1
Hammers, fitters, 8-oz.	1
Handles, file — large	3
Handles, file — middling	3
Handles, file — small	3
Woolwich Store Charge, No. 8.	
Punches, centre, 4½ inches	1
Punches, R.B.L. guns — brass — 7 inches	1
Punches, R.B.L. guns — brass — 6 ,,	1
Punches, R.B.L. guns — copper, 5½ ,,	1
Punches, R.B.L. guns — steel — 13 ,,	1
Punches, R.B.L. guns — steel — 7 ,,	1
Punches, R.B.L. guns — steel — 6 ,,	1
Punches, R.B.L. guns — steel — 4 ,,	1
Spanners, McMahon, 9-inch	1
Tommies, R.B.L. guns — forked	1
Tommies, R.B.L. guns — plain	1
Woolwich Store Charge, No. 16.	
Wrenches, sight, R.B.L.	1
Woolwich Store Charge, No. 18.	
Cloths, sponge	12

Digitized by Google

Appendix IX.—*continued.*

CHEST, TOOL, FILLED, No. 3E.

(Wheeler-Fitters, R.A. Siege, for Wrought-iron Carriages, and for repairs to Saddletrees).

Articles.	No.
Woolwich Store Charge, No. 7.	
Chests, tool, empty, No. 3	1
Adapters, brace	1
Adzes, carpenters.... Heads	1
Adzes, carpenters.... Handles	1
Augers shell .... $1\frac{1}{4}$-inch	1
Augers shell .... $1\frac{1}{16}$ "	1
Augers shell .... 1 "	1
Augers shell .... $\frac{7}{8}$ "	1
Augers shell .... $\frac{5}{8}$ "	1
Augers shell .... $\frac{1}{2}$ "	1
Augers Handles 16	1
Augers Handles $13\frac{1}{2}$	1
Augers Handles 12	1
Awls Blades, brad	12
Awls Handles, brad large	2
Awls Handles, brad small	2
Bags, tool, carpenters	1
Bevels, steel blade, 12-inch	1
Braces carpenters, Bits (set of 24)* sets	1
Braces ratchet, 12-inch Drills (set of 11) "	1
Braces " 9 "	1
Braces smiths	1

* Detail of Bits :—

Braces, carpenters, Bits.	centre, $1\frac{1}{8}$, 1, $\frac{7}{8}$, $\frac{3}{4}$, $\frac{5}{8}$, $\frac{1}{2}$, and $\frac{3}{8}$-inch	7
	countersink { flat	1
	countersink { rose	1
	dowling sash	1
	gouge, $\frac{7}{16}$, $\frac{3}{8}$, $\frac{5}{16}$, $\frac{1}{4}$, $\frac{3}{16}$, and $\frac{1}{8}$-inch	6
	nose, $\frac{3}{8}$, $\frac{5}{16}$, $\frac{1}{4}$, $\frac{3}{16}$, and $\frac{1}{8}$-inch	5
	rimer, square	1
	screwdriver	1
	taper	1
		24

Digitized by Google

Appendix IX.—*continued.*

Chest, Tool, Filled, No. 3E—*continued.*

Articles.	No.
Woolwich Store Charge, No. 7—continued.	
Braces, smiths, bits — countersink rose	1
Braces, smiths, bits — rimer — half-round	1
Braces, smiths, bits — rimer — square	1
Callipers, 6-inch	1 pairs
Cans, oil, lubricating, G. S.	1
Chisels — cross-cut, 7 inches × ¼ inch	2
Chisels — firmer, coachmakers — 1½-inch	1
Chisels — firmer, coachmakers — 1¼ „	1
Chisels — firmer, coachmakers — 1 „	1
Chisels — firmer, coachmakers — ¾ „	1
Chisels — firmer, coachmakers — ⅝ „	1
Chisels — firmer, coachmakers — ⅜ „	1
Chisels — hand, cold, ¾ inch × 8 inches	2
Chisels — mortice, ¼-inch	1
Chisels — rivet head	1
Compasses, wing, 7-inch	1 pairs
Dividers, spring, 6-inch	1
Drifts, steel, round — 5/16-inch	1
Drifts, steel, round — 7/16 „	1
Drifts, steel, round — 9/16 „	1
Drifts, steel, round — 11/16 „	1
Drifts, steel, round — 13/16 „	1
Drivers, screw, G.S. — 14-inch	1
Drivers, screw, G.S. — 6 „	1
Files — bastard — flat, 14-inch	2
Files — bastard — half-round, 14-inch	2
Files — bastard — round — 10-inch	2
Files — bastard — round — 6 „	2
Files — bastard — three-square, 14 „	2
Files — saw, three-square — hand, 5½-inch	4
Files — saw, three-square — tenon, 4 „	4
Gauges — carpenters — marking	1
Gauges — carpenters — mortice	1
Gauges — saddletreemakers	1 sets
Gimlets, common — (3/16-inch, 2) (¼ „ 1)	3

Digitized by Google

Appendix IX.—*continued.*

Chest, Tool, Filled, No. 3E—*continued.*

Articles.	No.
Woolwich Store Charge, No. 7—continued.	
Gouges firmer 1-inch	1
Gouges firmer ¾ „	1
Gouges firmer ½ „	1
Gouges pecking, 1-inch	1
Hammers fitters 32-oz.	1
Hammers fitters 16 „	2
Hammers fitters 8 „	1
Hammers riveting, 24 „	1
Hammers smiths, sledge, 10-lb.	1
Hammers screw	1
Handles, file middling	2
Handles, file small	1
Hatchets, band, 3-lb.	1
Holders, rivet head, small	1
Woolwich Store Charge, No. 8.	
Knives, drawing, carpenters	1
Lines, carpenters	1
Mallets, carpenters	1
Pencils, carpenters	6
Pincers, carpenters pairs	1
Planes jack, double iron	1
Planes plough	1
Planes rabbet, skew	1
Planes smoothing, G.S.	1
Plates, screw, 10 taps, 20-hole	1
Pots, glue, 1-pint	1
Punches carpenters, small	1
Punches centre, 4½-inch	1
Rasps, coarse, half-round, 12-inch	1
Reels, carpenters line	1
Rods, smiths, iron	2
Rules, saddletreemakers	1
Saws compass	1
Saws cutting metal, 10-inch	1
Saws „ „ Blades, 10-inch, spare	1
Saws dovetail, brass back	1
Saws hand, 24-inch	1
Saws tenon, 14-inch	1

Digitized by Google

Appendix IX.—*continued.*

Chest, Tool, Filled, No. 3E—*continued.*

Articles.	No.
Woolwich Store Charge, No. 8—continued.	
Screws, thumb	1
Scribers	1
Sets, saw, hand	1
Shaves, spoke { $3\frac{1}{4}$-inch	1
{ $2\frac{1}{2}$,, ...	1
Snaps, riveting rod { $1\frac{5}{8}$,, ...	1
{ $1\frac{1}{2}$,, ...	1
{ $1\frac{3}{8}$,, ...	1
{ $1\frac{1}{8}$,, ...	1
{ 1 ,, ...	1
{ $\frac{7}{8}$,, ...	1
{ $\frac{3}{4}$,, ...	1
{ $\frac{5}{8}$,, ...	1
{ $\frac{1}{2}$,, ...	1
Squares, carpenters, 9-inch	1
Stocks, drill, bevel wheel	1
Stones, oil { carpenters	1
{ smiths	1
Tongs, wheeler-fitters .... pairs	1
Vices, hand, 16-oz.	1
Wrenches, tap, small	1
Woolwich Store Charge, No. 11.	
Chalk, white (for line, carpenters) .... lb.	$\frac{1}{4}$
Woolwich Store Charge, No. 25.	
Brushes, paint, sash tool, No. 6 (for glue)	

Digitized by Google

Appendix IX.—*continued.*

Chest, Tool, Filled, No. 3E—*continued.*

Articles.	No.
The undermentioned are not carried in the Chest, and will be separately demanded, charged, and accounted for.	
Woolwich Store Charge, No. 7.	
Chests, stocks and dies, Whitworth thread, 1-inch to ⅜-inch, filled	1
(Detail of Stocks and Dies.)	
Chests, stocks and dies, Whitworth thread. — Dies .... 1-inch .... sets	1
Dies .... ⅞ "	1
Dies .... ¾ "	1
Dies .... ⅝ "	1
Dies .... ½ "	1
Dies .... 7/16 "	1
Dies .... ⅜ "	1
Spanners .... ⅞-inch	1
Spanners .... ⅝ "	1
Stocks .... D.	1
Stocks .... C.	1
Taps .... 1 inch plug	1
Taps .... 1 inch 1st turn	1
Taps .... 1 inch 2nd "	1
Taps .... ⅞ " plug	1
Taps .... ⅞ " 1st turn	1
Taps .... ⅞ " 2nd "	1
Taps .... ¾ " plug	1
Taps .... ¾ " 1st turn	1
Taps .... ¾ " 2nd "	1
Taps .... ⅝ " plug	1
Taps .... ⅝ " 1st turn	1
Taps .... ⅝ " 2nd "	1
Taps .... ½ " plug	1
Taps .... ½ " 1st turn	1
Taps .... ½ " 2nd "	1
Taps .... 7/16 inch plug	1
Taps .... 7/16 inch 1st turn	1
Taps .... 7/16 inch 2nd "	1
Taps .... ⅜ " plug	1
Taps .... ⅜ " 1st turn	1
Taps .... ⅜ " 2nd "	1
Wrenches .... I.	1
Wrenches .... H.	1
Wrenches .... F.	1
Wrenches .... D.	1

Digitized by Google

Appendix IX.—*continued.*

CHEST, TOOL, FILLED No. 3G.

(Wheelers' Tools, R.A. Field, for Wood Carriages.)

Articles.	No.
Woolwich Store Charge, No. 7.	
Chests, tool, empty, No. 3	1
Adapters, brace	1
Adzes, carpenters — Handles	1
Adzes, carpenters — Heads	1
Augers — shell — 1¼-inch	1
Augers — shell — 1 1/16 "	1
Augers — shell — 1 "	1
Augers — shell — ⅞ "	1
Augers — shell — ¾ "	1
Augers — shell — ⅝ "	1
Augers — shell — ½ "	1
Augers — Handles — 16-inch	1
Augers — Handles — 13½ "	1
Augers — Handles — 12 "	1
Awls — Blades, brad	12
Awls — Handles, brad — large	2
Awls — Handles, brad — small	2
Bags, tool, carpenters	1
Bevels, steel blade, 12-inch	1
Braces — carpenters, Bits (set of 24)*	1 sets
Braces — smiths	1
Braces — " Bits — countersink, rose	1
Braces — " Bits — rimer — half round	1
Braces — " Bits — rimer — square	1
Braces — ratchet, 9-inch	1
Braces — " 12 " Drills (set of 11)	1 sets
Brushes, paint, sash tool, No. 6	1
Callipers, 6-inch	1 pairs
Cans, oil, lubricating, G. S.	1
Chisels — firmer, coachmakers — 1½-inch	1
Chisels — firmer, coachmakers — 1¼ "	1
Chisels — firmer, coachmakers — 1 "	1
Chisels — firmer, coachmakers — ¾ "	1
Chisels — firmer, coachmakers — ½ "	1
Chisels — firmer, coachmakers — ⅜ "	1
Chisels — hand, cold, ¾-inch × 8-inch	2
Chisels — mortice, ¼-inch	1

* Detail of bits:—

Braces, carpenters, Bits,	centre, 1½, 1, ⅞, ¾, ⅝, ½, and ⅜-inch	7
	countersink — flat	1
	countersink — rose	1
	dowling sash	1
	gouge, 7/16, ⅜, 5/16, ¼, 3/16, and ⅛-inch	6
	nose, ⅝, 1/16, ¼, 3/16, and ⅛-inch	5
	rimer, square	1
	screwdriver	1
	taper	1
		24

Digitized by Google

Appendix IX.—*continued.*

Chest, Tool, Filled, No. 3G—*continued.*

Articles.	No.
Woolwich Store Charge, No 7—continued.	
Compasses, wing, 7-inch ... ... pairs	1
Dividers, spring, 6-inch	1
Drivers, screw, G.S. { 14-inch	1
{ 6 ,, ...	1
Files { bastard { flat, 14-inch	1
{ half-round, 14-inch	1
{ round { 10-inch	1
{ 6 ,, ...	1
{ saw, three-square { hand, 5½-inch	4
{ tenon, 4 ,, ...	4
Gauges, carpenters { marking	1
{ mortice	1
Gimlets, common { (⅜-inch, 2) ... ... }	3
{ (¼ ,, 1) ... ... }	
Gouges { firmer { 1-inch	1
{ { ½ ,, ...	1
{ { ½ ,, ...	1
{ pecking 1 ,, ...	1
Hammers { fitters { 16-oz.	1
{ { 8 ,, ...	1
{ riveting, 24 ,, ...	1
{ screw	1
Handles, file { middling	2
{ small	1
Hatchets, hand, 3-lb.	1
Woolwich Store Charge, No. 8.	
Knives, drawing, carpenters	1
Lines, carpenters	1
Mallets, carpenters	1
Pencils, carpenters	6
Pincers, carpenters ... ... pairs	1
Planes { jack, double iron	1
{ plough	1
{ rabbet, skew	1
{ smoothing, G. S.	1
Plates, screw, 10 taps, 20 hole	1
Pots, glue, 1-pint	1
Punches { carpenters, small	1
{ centre, 4½-inch	1
Rasps, coarse, half-round, 12-inch	1
Reels, carpenters line	1
Rules, saddletreemakers	1
Saws { compass	1
{ dovetail, brass back	1
{ hand, 24-inch	1
{ tenon, 14 ,, ...	1
Screws, thumb	1
Scribers	1
Sets, saw, hand	1
Shaves, spoke { 3½-inch	1
{ 2½ ,, ...	1
Squares, carpenters, 9-inch	1
Stocks, drill, bevel wheel	1
Stoves, oil, carpenters	1
Vices, hand, 16-oz.	1
Wrenches, tap, small	1

Digitized by Google

Appendix IX.—*continued.*

Chest, Tool, Filled, No. 3G—*continued.*

Articles.	No.
Woolwich Store Charge, No. 11.	
Chalk, white (for line, carpenters) ... ... lb.	½
The undermentioned are not carried in the Chest, and will be separately demanded, charged, and accounted for.	
Woolwich Store Charge, No. 7.	
Chests, stocks and dies, Whitworth thread, 1-inch to ⅜-inch, filled	1

54
Gen. No.
4709

BAG, TOOL, ARMAMENT ARTIFICERS.

Articles.	No.
Woolwich Store Charge, No. 7.	
Bag, tool, farriers	1
Bag, vice	1*
Braces, ratchet 12-inch, drills (sets of 11) .... sets	1
Braces, ratchet 9 ,, ...	1
Callipers, 6-inch	1
Chisels, cross-cut, 7-inch × ½-inch	1
Chisels, hand, cold, ¾-inch × 8-inch	3
Dividers, spring, 6-inch .... pairs	1
Drivers, screw, G.S., 6-inch....	1
Files bastard half round, 12-inch	1
Files bastard round 12 ,, ...	1
Files bastard round 8 ,, ...	1
Files bastard safe edge 12 ,, ...	1
Files bastard safe edge 8 ,, ...	1
Files second-cut, half round, 12 ,, ...	1
Files dead smooth half round, 4-inch	1
Files dead smooth safe edge, 4 ,, ...	1
Hammers, fitters, 16-oz.	1
Handles, file large	1
Handles, file middling	1
Handles, file small	1

* To be available at the station with each set of tools, but not to be issued unless actually required by the Artificer.

Digitized by Google

Appendix IX.—*continued.*

Bag, Tool, Armament Artificers—*continued.*

Articles.	No.
Woolwich Store Charge, No. 8.	
Levels, spirit, block, 9 inches	1
Punches, centre	1
Rules, Armament Artificers, 1-foot....	1
Screws, extracting, packing	1*
Scribers	1
Spanners, McMahon, 9-inch	1
Tips, oil	1
Vice { bench, saddletree makers	1†
Vice { hand, 20-oz.	1

* Piece of twisted wire can be made by Artificer.
† To be available at the station with each set of tools, but not to be issued unless actually required by the Artificer.

BAG, VICE, ARMAMENT ARTIFICERS.

(Containing tools for the repair of Position-Finding Instruments.)

Articles.	No.
Weedon Store Charge.	
Pliers, flat nose	1
Woolwich Store Charge, No. 7.	
Bags, vice	1
Bits, soldering, ½ lb. .... lbs.	1
Brushes { plate	2
Brushes { watchmakers	2

Digitized by Google

Appendix IX.—*continued.*

Bag, Vice, Armament Artificers—*continued.*

Articles.	No.
Woolwich Store Charge, No. 7—continued.	
Burnishers, flat	1
Burnishers, oval	1
Burnishers, triangular	1
Callipers, 5-inch	1
Dividers, spring, 6-inch	1
Drills, Morse, twist	1
Drivers, screw, armourers, small	1
Drivers, screw, G.S. 6-inch	1
Drivers, screw, G.S. 4 „	1
Eyeglasses	1
Files, bastard, safe edge 8-inch	1
Files, rough, round, 6-inch	1
Files, second cut, half-round, 6-inch	1
Files, second cut, one safe side, square, taper, 8-inch	1
Files, second cut, safe edge, 6-inch	1
Files, dead smooth, flat, 6-inch	1
Files, dead smooth, half-round, 4-inch	1
Files, dead smooth, safe edge, 4-inch	1
Files, smooth, half-round, 6-inch	1
Files, smooth, pillar, 3-inch	1
Files, smooth, round, 6-inch	1
Files, smooth, round, 3 „	1
Files, smooth, safe edge, 6-inch	1
Files, smooth, safe edge, 3 „	1
Files, smooth, square, 6-inch	1
Files, smooth, square, 4 „	1
Files, smooth, three-square, 3-inch	1
Files, pivoting, 6 varieties	1
Gravers, turners, $\frac{5}{32}$-inch	1
Gravers, turners, $\frac{3}{32}$-inch	1
Hammers, fitters, 8 oz.	1
Woolwich Store Charge, No. 8.	
Knives, clasp	1
Pincers, carpenters, 8½-inch	1
Pipes, blow	1

54
Artillery
3360

Digitized by Google

Appendix IX.—*continued.*

Bag, Vice, Armament Artificers—*continued.*

Articles.	No.
Woolwich Store Charge, No. 8—continued.	
Plate, screw, with taps, British Association, standard dimension	1
Plate, screw, 8 taps, 27-hole	1
Pliers { flat nose	1
Pliers { round nose	1
Pliers { side cutting, 7-inch	1
Punch, centre, 4-inch, fine	1
Rule, armament artificers, 1-foot	1
Saws { cutting metal, 6-inch	1
Saws { keyhole { blade	1
Saws { keyhole { pads	1
Scissors, laboratory, 7-inch, small	1
Spanners, McMahon, 9-inch	1
Square, fitters, 4-inch	1
Stone, oil, telegraph mechanics	1
Tips, oil	1
Tongs, watchmakers, bull-nose	1
Tools, watchmakers, for repair of position-finding instruments { drills, hand, millers, falls	1
Tools, watchmakers, for repair of position-finding instruments { drivers, screw, watchmakers ... sets	1
Tools, watchmakers, for repair of position-finding instruments { nippers, end cutting, G.S. { 6-inch	1
Tools, watchmakers, for repair of position-finding instruments { nippers, end cutting, G.S. { 4 „	1
Tools, watchmakers, for repair of position-finding instruments { tweezers, watchmakers, hollow pattern	1
Vice { hand, 8-oz.	1
Vice { pin	1
Woolwich Store Charge, No. 28.	
Leathers, chamois	1
Pegwood ... bundles	1
Solder, telegraph mechanics... oz.	2
Tools, electricians (set in case)	1
Tools, jointers, telegraph { compound, Chatterton's ... lbs.	1
Tools, jointers, telegraph { lamps, spirit, telegraph equipment	1
Tools, jointers, telegraph { solder, tinman's ... sticks	1

Digitized by Google

Appendix IX.—*continued.*

CHEST, TOOL, FILLED, No. 3H.

(Watchmakers, for repair to Position-Finding Instruments, and for use of Armament Artificers specially appointed for this duty.)

Articles.	No.
Weedon Store Charge.	
Bits, soldering, 1½ lbs.	1
Boxes, oilstone, dust	1
Sticks, buff	6
Woolwich Store Charge, No. 7.	
Awls, blades, brad .... sets	2
Awls, handles, brad large	6
Awls, handles, brad small	6
Blocks, scribing	1
Boxes, polishing	1
Braces carpenters	1
Braces carpenters' bits (set of 24) .... sets	1
Broaches, telegraph, mechanics blades .... „	1
Broaches, telegraph, mechanics handles	12
Brushes, camel-hair 1½-inch	1
Brushes, camel-hair 1 „	1
Callipers, 4-inch inside	1
Callipers, 4-inch outside	1
Cans, spirits of wine, 1½ pint, flat	1
Card, scratch .... feet	1
Chisels firmer 1-inch	1
Chisels firmer ¾ „	1
Chisels firmer ½ „	1
Chisels firmer ¼ „	1
Chisels firmer ⅛ „	1
Chisels socket, ½-inch	1
Cloth, emery O ....quires	½
Cloth, emery F .... „	¼
Cloth, emery Flour .... „	¼

Digitized by Google

Appendix IX.—*continued.*

Chest, Tool, Filled, No. 3H—*continued.*

Articles.	No.
Woolwich Store Charge, No. 7—continued.	
Drivers, screw, watchmakers { ¼-inch / ⅜ „ / ⅛ „	1 / 1 / 1
Dust, oilstone	½ lbs.
Files: bastard: half-round, 12-inch	1
Files: bastard: round, 10-inch	1
Files: bastard: safe edge { 14-inch / 8 „ / 4 „	1 / 1 / 1
Files: bastard: square, 10-inch	1
Files: rough { flat, 18-inch / round, 6-inch	1 / 2
Files: saw, 3-square, hand, 6-inch	2
Files: second cut: fish back, 12-inch	1
Files: second cut: half-round { 10-inch / 6 „	1 / 1
Files: second cut: one safe side, square, taper, 8-inch	1
Files: second cut: safe edge { 8-inch / 6 „	2 / 1
Files: dead smooth: flat { 12-inch / 6 „	1 / 2
Files: dead smooth: half-round { 6-inch / 4 „	1 / 1
Files: dead smooth: safe edge { 6 „ / 4 „	1 / 2
Files: smooth: fish back, taper, 10 „	1
Files: smooth: flat, 8-inch	2
Files: smooth: half-round { 10-inch / 6 „ / 3 „	1 / 2 / 2
Files: smooth: pillar { 6 „ / 3 „	1 / 2
Files: smooth: round { 6 „ / 3 „	2 / 2
Files: smooth: safe edge { 10 „ / 6 „ / 3 „	1 / 2 / 2
Files: smooth: square { 6 „ / 4 „	2 / 2
Files: smooth: 3-square, 3-inch	2

Digitized by Google

Appendix IX.—*continued.*

Chest, Tool, Filled, No. 3H—*continued.*

Articles.	No.
Woolwich Store Charge, No. 7—continued.	
Files, Geneva, cylinder notch	2
Files, Geneva, dovetail	2
Files, Geneva, ratchet	2
Files, Geneva, round	2
Files, Geneva, square	2
Files, Geneva, 3 square	2
Files, screw-head	4
Gauges, standard wire	1
Gimlets, screw sets	1
Gouges, firmer, $\frac{1}{8}$-inch	1
Gouges, firmer, $\frac{1}{4}$ "	1
Gouges, firmer, $\frac{3}{8}$ "	1
Gouges, firmer, $\frac{1}{2}$ "	1
Gouges, flat, $\frac{3}{8}$ "	1
Gouges, flat, $\frac{3}{4}$ "	1
Gravers, turners, $\frac{9}{32}$-inch	1
Gravers, turners, $\frac{7}{32}$ "	1
Grindstone, 8-inch	1*
Hammer, fitters, 16-oz.	1
Hammer, watchmakers	1
Handles, file, large	3
Handles, file, middling	12
Handles, file, small	12
Handles, graver	12
Holders, milling tool	1
Woolwich Store Charge, No. 8.	
Ladles, melting, half-pint	1*
Lathe, watchmakers, arm	1
Lathe, watchmakers, mandril	1
Lathe, watchmakers, wheel	1
Mallets, tinman's	1
Planes, smoothing, G.S.	1
Plates, draw	1
Plates, surface, 10″ × 4″	1
Pliers, watchmakers, 5-inch	1
Pliers, watchmakers, 4-inch	1
Pots, fire, telegraph mechanics	1*
Powder, emery, flour lbs.	½
Rags, fine cotton ,,	2

* Carried in a separate packing case which will accompany each No. 3 H. chest.

Digitized by Google

Appendix IX.—*continued.*

Chest, Tool, Filled, No. 3H—*continued.*

Articles.	No.
Woolwich Store Charge, No. 8—continued.	
Rasps, coarse, flat, 8-inch	1
Rasps, coarse, half-round, 8-inch	1
Rasps, fine, flat, 6-inch	1
Rasps, fine, half-round, 6-inch	1
Rimers, milling, flat (4 sizes) sets	1
Rimers, milling, hollow (4 sizes) ,,	1
Rimers, milling, round (4 sizes) ,,	1
Saws, cutting metal, 6-inch	1
Saws, cutting metal, blades, 6-inch	2
Saws, dovetail, brass back	1
Saws, hand, 26-inch	1
Saws, key-hole, blades	3
Saws, key-hole, pads	1
Sets, saw, hand	1
Shaves, spoke, 2½-inch	1
Shears, strip, 8-inch, telegraph mechanics	1
Squares, carpenters, 9-inch	1
Stands, wood, for Morse twist drills sets	1*
Steel, rod, stubs, bright, of sizes lbs.	1
Stocks and dies, Whitworth thread, telegraph mechanics, and 2 wrenches	1
Stones, oil, slip Arkansas	2
Straight-edge, steel, 2 feet	1
Tin, grain lbs.	1
Tongs, watchmakers, wide nose	1
Tools, watchmakers, for repair of position-finding instruments:—	
Bouchon's, clock pieces for bushing pivot holes, assorted sizes	12
Bouchon's, timepiece, for bushing pivot holes ,, ,,	100
Broaches, pivot, English, assorted sizes	24
Carriers, steel, for throw or pivot turns sets	1
Cups, oil, boxwood, high pattern	1
Drills, small, and stocks, watchwork	1
Endstones, garnet, flat and convex	144
Glass, covering, and tray	1
Jars, essence	1
Screws, jewel, flat heads	144
Screws, jewel, round heads	144
Screws, watch, English and Geneva (assorted sizes) of each	144

54 Artillery 3360

* The drills are carried in the "Bag, vice, armament artificers."

Digitized by Google

Appendix IX—*continued.*

Chest, Tool, Filled, No. 3H—*continued.*

Articles.	No.
Woolwich Store Charge, No. 8—continued.	
Tools, watchmakers, &c.—*continued.*	
Silver, German sheet .. 15 Standard wire gauge of each	1
Silver, German sheet .. 19 „ „ „ .... „	1
Silver, German sheet .. 22 „ „ „ .... „	1
Vices, screw, pin, holding broaches, American pattern	1
Tweezers	1
Vice, bench, parallel, 12 lbs.	1
Wire Brass 1 Standard wire gauge .... lbs.	1
Wire „ 7 „ „ „ .... „	1
Wire „ 12 „ „ „ .... „	1
Wire „ 14 „ „ „ .... „	½
Wire „ 20 „ „ „ .... „	½
Woolwich Store Charge, No. 9.	
Brass, sheet 10 standard wire gauge .... lbs.	2
Brass, sheet 14 „ „ „ .... „	2
Brass, sheet 16 „ „ „ .... „	1
Brass, sheet 20 „ „ „ .... „	1
Woolwich Store Charge, No. 10.	
Chisels, cold, flat 8-inch × ¾-inch	1
Chisels, cold, flat 4½ „ × ½ „	1
Woolwich Store Charge, No. 11.	
Borax, refined.... .... lbs.	½
Bottles glass narrow mouth, without capsules, 2 oz.	2
Bottles glass wide mouth „ „ 4 „	2
Bottles stone 1 pint (for soldering solution)	1†
Bottles stone ½ pint (for lacquer)	3
Bottles tin, oil, 2 quarts (for methylated spirits)	1†
Lacquers pale gold .... bottles	1
Lacquers white .... pint	1
Methylated Spirits.... .... gals.	1*
Oil, Kelly's watch .... small bottle	1
Oil, Kelly's clock .... „ „	1
Paraffin black .... lbs.	1
Paraffin white .... „	1
Platinum, bichloride.... .... tubes	3
Resin, black .... lbs.	½
Solution, soldering .... pint	1†

* Carried in a separate packing case.
† Carried in a separate packing case which will accompany each, No. 3H. chest.

Digitized by Google

Appendix IX—*continued.*

Chest, Tool, Filled, No. 3H—*continued.*

Articles.			No.
	Woolwich Store Charge, No. 18.		
Cloths, sponge	....	doz.	1
	Woolwich Store Charge, No. 22.		
Shellac, orange	....	lbs.	¼
	Woolwich Store Charge, No. 25.		
Stamps, steel, for metal	⅛-inch, 0 to 8	set	1
	⅛-inch, letters	,,	1
Wick, common	....	lbs.	¼
	Woolwich Store Charge, No. 28.		
Brushes, camel hair, ½ inch	....		1
Counters, bone	....		24
Ebonite	1-inch, square bar	lb.	1
	1 ,, round	,,	1
	¼ ,, sheet	,,	1
	1/16 ,, ,, ...	,,	¼
Elderpith, telegraph, mechanics	....	bundles	3
Galvanometers	horizontal 800-ohms, with magnet, in leather case		1
	detector, 3-coil		1
	cases, detector, 3-coil		1
Leathers, chamois	....		3
Pegwood	....	bundles	6
Tools, electricians, cases, boxwood	files		1
	springs and pins		1
,, jointers, telegraph	bottles, gutta percha, 4 ozs.		1
	compound, Chatterton's	lbs	2
	knives, shoemakers		1
	solder, tinman's	lbs.	1
Wire German silver	20 S.W.G.	,,	⅛
	30 ,, ...	,,	¼
platinum, No. 11 S.W.G.	....	oz.	1
	Woolwich Store Charge, No. 29.		
Batteries, Le Clanché, testing 6-cell	....		1*
Boxes borax	....		1
resin	....		1
Coils, resistance, 10,000 ohms	....		1
Compasses, magnetic, pocket	....		1

57
Devonport
5868

* Carried in a separate packing case which will accompanying each 3H chest.

Digitized by Google

APPENDIX X.

List of Stores for Instructors in Position-Finding.

(*Referred to in paragraph* 203.)

Articles.	No.
57 Gen. No. 4604	
Woolwich Store Charge, No. 7.	
Drivers, screw — armourers small	1
Drivers, screw — General Service — 12-inch	1
Drivers, screw — General Service — 6 „	2
Drivers, screw — watchmaker's — $\frac{1}{4}$ „	1
Drivers, screw — watchmaker's — $\frac{3}{16}$ „	1
Files — bastard, three-square 8-inch	1
Files — saw, three-square, hand, 8-inch	3
Files — smooth, three-square 4-inch	2
Woolwich Store Charge, No. 8.	
Pliers, side cutting, 7-inch	1
Tips, oil	1
Woolwich Store Charge, No. 10.	
T-square, 52-inch	1
57 Gen. No. 4604	
Woolwich Store Charge, No. 22.	
Paper, cartridge — quires	5
Tubes, electric, No. 10	100

Digitized by Google

Appendix X—*continued.*

List of Stores for Instructors in Position-Finding.

Articles.	No.	
Woolwich Store Charge, No. 28.		
Coils, resistance, 10,000 ohms*	1	
Funnels, battery cell	1	57 Devonport 5868
Galvanometer, horizontal 800 ohms* (in leather case)	1	
Holden's cell tester	1	
Test table wire yds.	100	57 Gen. No. 4604
Wire, covered, B 2 yds.	100	
Woolwich Store Charge, No. 29.		
Boards, drawing, Antiquarian	1	
Instruments, drawing, Royal Engineers	1	
Pins, drawing	20	
Protractors, brass, circular 8-inch	1	
Scales, mathematical, No. 3 Marquoi sets	1	
Sextants, pocket*	1	
Stationery.†		
Paper, drawing, antiquarian quires	1	
Pencils blacklead, HHH	6	
" HB	6	
blue	3	
red	3	
Electrical Books—Stationery.†		
Notes on Electricity for Garrison Artillery	6	
Electricity in the Service of Man	1	

* In cases where two sets of stores are issued to any one district, as a special case, these articles will not form part of the second set. 57 Devonport 5868

† Supplied from the War Office on requisition.

Digitized by Google

Digitized by Google

APPEN

Spanners and Special Implements

Vocabulary No.	Description.	B.L. 12″ Garrison.	B.L. Barbette. 10″, Marks I	10″, Marks II	10″, Marks III	9″·2, Marks I	9″·2, Marks II	B.L. Barbette. 6″	B.L. Travelling. 6″, V.C.P.	B.L. Travelling. 5″, 6 ft. parapet.	B.L. Travelling. 4″, 6 ft. parapet.	R.M.L. 12″·5 Casemate and dwarf.	R.M.L. 12″·5 Small Port. 6 ft. recoil.	R.M.L. 12″·5 Small Port. 7 ft. recoil.
	Spanners, hydraulic buffer.													
No.														
1	Cap and gland	...	...	...	...	...	...	...	...	1	1	...	...	...
2	Gland	...	...	...	...	...	...	...	...	...	...	...	1	...
2	,, ...	...	...	...	...	...	...	...	...	...	...	...	..	...
3	,, ...	...	...	...	...	...	...	...	...	...	...	...	...	...
3	,, ...	...	...	...	...	...	...	...	...	...	...	...	...	...
4	,, ...	...	...	...	...	...	...	...	...	...	...	...	...	...
5	,, ...	...	...	...	...	...	...	...	...	...	...	...	...	1
6	Plug and draw off cock...	...	...	...	...	...	...	...	...	1	1	1	1	1
21	Gland (with tommy, No. 21)	...	...	...	..	...	...	...	...	...	...	1	...	1
22	Caps...	1	...	...	...	...	...	...	...	...	...	...	...	...
23	Gland, outer (with plate)	1	...	...	...	...	...	...	...	...	...	...	...	...
24	,, inner	1	...	...	...	...	...	...	...	...	...	...	...	...
25	Nut, piston-rod	1	...	...	...	...	...	...	...	...	...	...	...	...
26	Union pipe, connecting and plug-filling hole	1	...	...	...	...	...	...	...	...	...	...	...	...
27	Coupling and nut, joint pipe, connecting...	1	...	...	...	...	...	...	...	...	...	...	...	..
34	Gland, outer	...	1	...	...	1	...	...	...	...	...	...	...	...
35	,, inner and plug	...	1	...	...	1	...	...	...	...	...	...	...	...
36	Bolt, connecting, piston-rod	...	1	...	...	1	...	...	...	...	...	...	...	...
37	Ring, securing, leather, packing	...	1	...	...	1	...	...	...	...	...	...	...	...
38	Cap, rear (with key)	...	...	1	...	...	1	...	..	...	...	...	...	...
39	Gland and pipe, connecting	...	...	1	...	...	1	...	...	...	...	...	...	...
40	Nuts, pipe, connecting, and filling ...	...	...	1	...	...	1	...	...	...	...	...	...	...
41	Plug, filling, and screw, securing	...	...	1	...	...	1	...	...	...	...	...	...	...
42	Gland, inner and cap	...	...	...	...	...	...	...	...	...	...	...	...	...
43	Nuts, piston-rod, and recoil valve	...	...	...	...	...	...	...	...	...	...	...	...	...
44	Gland, outer	...	...	...	...	...	...	...	...	...	...	...	...	...
45	Gland (with tommy, No. 22)	...	...	...	...	...	...	...	...	...	...	...	...	...
46	Cap, rear	...	...	...	1	...	...	...	...	...	...	...	...	...
47	Gland, inner { 10″ B.L., Mark III ... ... and plug pivot, R.M.L., 10″·4	...	...	...	1	...	...	...	...	...	...	...	...	...
48	Gland, outer	...	...	...	1	...	...	...	...	...	...	...	...	...
49	Plug, filling	...	...	...	1	...	...	...	...	...	...	...	...	...
50	,, ,, ...	...	...	...	...	...	...	...	...	...	...	...	...	...
51	Cap and gland	...	...	...	...	...	...	1	...	...	...	...	...	...
52	Ring, securing, leather, packing	...	...	...	...	...	...	1	...	...	...	...	...	...
53	Gland	...	...	...	...	...	...	...	1	...	...	...	...	...
54	Plug, cylinder	...	...	...	...	...	...	...	1	...	...	...	...	...
55	Nut, piston-rod, thin	...	...	...	...	...	...	...	1	...	...	...	...	...

Digitized by Google

DIX XI.

for Land Service Mountings.

R.M.L.						Medium.		R.M.L.	Proportions.		Remarks.
12″		10″·4	10″	9″	7″			Siege.			
35-ton.	25-ton, or 11″.	Barbette.		Casemate and dwarf.	Casemate and dwarf.	Carriages.	Slides.	Howitzers.	Per mounting.	Per work.	
...	...	...	...	...	...	...	...	1	...	1	
...	1	...	1	1	1	...	...	...	...	1	* Nos. 11, 12, 19, and 20 slides.
...	...	...	...	...	...	...	1*	...	...		† No. 9 slide only.
...	...	...	...	...	...	...	1†	...	...	1	‡ Nos. 7 and 26 carriages.
...	...	...	...	...	...	1‡	...	...	...		§ Nos. 4, 5, and 6 carriages.
...	...	...	...	...	...	1§	...	...	...	1	
1	...	...	...	...	...	...	...	...	...	1	
1	1	...	1	1	1	1	1	1	...	...	
...	...	...	...	...	...	...	...	...	...	1	
...	...	...	...	...	...	...	...	...	...	2	
...	...	...	...	...	...	...	...	...	...	2	
...	...	...	...	...	...	...	...	...	...	2	
...	...	...	...	...	...	...	...	...	...	2	
...	...	...	...	...	...	...	...	...	...	2	
...	...	...	...	...	...	...	...	...	...	2	
...	...	...	...	...	...	...	...	...	1	...	
...	...	...	...	...	...	...	...	...	1	...	...
...	...	...	...	...	...	...	...	...	1	...	
...	...	1	...	...	...	...	...	...	1	...	
...	...	...	...	...	...	...	...	...	...	1	
...	...	...	...	...	...	...	...	...	...	1	
...	...	...	...	...	...	...	...	...	...	1	
...	...	...	...	...	...	...	...	...	...	1	
...	...	1	...	...	...	...	...	...	...	1	
...	...	1	...	...	...	...	...	...	...	1	
...	...	1	...	...	...	...	...	...	...	1	
...	1	...	...	...	...	...	...	...	...	1	Tension buffers only.
...	...	...	...	...	...	...	...	...	...	1	
...	...	...	...	...	...	...	...	...	...		
...	...	1	...	...	...	...	...	...	...	1	
...	...	...	...	...	...	—	...	...	...	...	
...	...	...	...	...	...	...	...	...	...	1	
...	...	1	...	...	...	...	...	...	...	1	
...	...	...	...	...	...	...	...	...	...	1	
...	...	...	...	...	...	...	...	...	...	1	
...	...	...	...	...	...	...	...	...	...	1	
...	...	...	...	...	...	...	...	...	...	1	
...	...	...	...	...	...	...	...	...	...	1	

71—1
4694

Digitized by Google

Appendix

Spanners and Special Implements for

Vocabulary No.	Description.	B.L. 6″ V.C.P.	B.L. Barbette. 10″, Marks I	10″, Marks II	10″, Marks III	9″·2, Marks I	9″·2, Marks II	8″
	Spanners, hydraulic buffer—continued.							
56	Plugs, filling and emptying, and unions, pipe, connecting	1	...	...	...	...	...	...
57	Nut, piston-rod	...	...	...	...	...	...	...
58	Glands, inner and outer, and plug, tank cleaning	...	...	...	...	...	...	...
63	Cap and gland, also brake nut	...	...	...	...	...	...	...
64	Nut, piston-rod, and brake nut	...	...	...	...	...	...	...
65	Plugs, filling and drain, with tommy end, for capsquare screw	...	...	...	...	...	...	...
66	Cap, gland and piston	...	...	...	...	...	...	...
67	Plugs, filling and emptying, and screws, transom	...	...	...	...	...	...	...
72	Cap and gland	...	...	...	...	...	...	1
73	Ring, securing, leather, packing	...	...	...	...	...	...	1
74	Nuts, piston rod	...	...	...	...	...	...	...
75	Plugs, cylinder, glands, inner and outer, and plug, tank, cleaning	...	...	...	...	...	...	...
	Spanners, circular, hydraulic buffer.							
1	Box, piston, and valve box	...	...	...	...	...	...	...
2	Locking valve	...	...	...	...	...	...	...
	Spanners.							
1	Axle, roller, carriage	...	1	...	...	1	...	...
2	,, truck, slide L	...	1	...	...	1	...	...
3	Bolts, fixing, bracket, guide, rear, gear retaining	...	1	...	...	1	...	...
4	Spindle, spring, gear retaining, and ram controlling, hydraulic buffer, and ram controlling, 10·4″	...	1	...	...	1	...	...
5	Bolts, counterweight	...	...	1	1	...	1	...
6	Cone, elevating	...	...	1	...	...	1	...
7	Shaft, pinion, elevating	...	...	1	...	...	1	...
8	Seating valve and plug (with tommy, No. 2), pump gear, pivot, hydraulic	...	...	1	1	...	1	...
9	Union pipe delivery (large), pump gear, pivot, hydraulic	...	...	1	...	...	1	...
10	Union pipe delivery (small), pump gear, pivot, hydraulic	...	...	1	...	...	1	...
11	Union pipe, tank, pump gear, pivot, hydraulic	...	...	1	...	...	1	...

Digitized by Google

XI—*continued.*

Land Service Mountings—*continued.*

Q.F.				R.M.L.	Medium.	Proportions.		Remarks.
				10′ ·4				
4″·7 C.P.	12-pr.	6-pr. recoil.	3 pr. travelling.	Barbette.	Slides.	Per mounting.	Per work.	
...	...	...	...	...	...	...	1	
1	...	...	...	...	...	1	...	
1	...	...	...	...	...	1	...	
...	...	...	1	...	...	1	...	
...	...	...	1	...	...	1	...	
...	...	...	1	...	...	1	...	
...	...	1	...	...	...	1	...	
...	...	...	...	...	...	1	...	
...	...	...	...	...	...	...	1	
...	...	...	...	...	...	...	1	
...	1	...	...	...	...	1	...	
...	1	...	...	...	...	1	...	
...	...	...	...	...	1	...	1	No. 8 slide.
...	...	...	...	...	1	...	1	,, ,,
...	...	...	...	1	...	...	1	
...	...	...	...	...	...	...	1	
...	...	...	...	...	...	1	...	
...	...	...	...	1	...	...	1	
...	...	...	...	...	...	...	1	
...	...	...	...	...	...	...	1	
...	...	...	...	...	...	...	1	
...	...	...	...	...	...	...	1	
...	...	...	...	...	...	...	1	
...	...	...	...	...	...	...	1	

Digitized by Google

Appendix XI—*continued.*

Spanners and Special Implements for Land Service Mountings—*continued.*

Vocabulary No.	Description.	B.L. 6″ V.C.P.	B.L. Barbette. 10″, Marks I	10″, Marks II	10″, Marks III	9″·2, Marks I	9″·2, Marks II	B.L. Disappearing. 6″, Marks I	6″, Marks II to IV	Proportions. Per mounting.	Proportions. Per work.
	Spanners—continued.										
12	Nozzle, pipe, connecting buffer ...	...	...	...	1	...	...	...	...	...	1
13	Union pipe delivery	...	...	...	1	...	...	...	...	...	1
14	Union pipe, connecting buffer, and union pipe suction, pump gear, pivot, hydraulic	...	...	...	1	...	...	...	...	...	1
15	Air plug, gland, and discharge pipe, pump running back; also ...	...	1	...	...	1	...	...	...	1	...
	Inner pipe delivery, gear pivot, hydraulic, 10″, Mark III ...	...	...	1	1	...	1	...	...	...	1
16	Cap, valve box (large), pump running back	...	...	1	1	...	1	...	...	...	1
17	Cap, valve box (medium), pump running back	...	1	...	...	1	...	...	...	1	...
	Cap, valve box (medium), pump running back	...	...	1	1	...	1	...	...	...	1
18	Cap, valve box (small), pump running back	...	1	...	...	1	...	...	...	1	...
19	Plug, bottom, pump running back ...	...	...	1	1	...	1	...	...	...	1
20	Bolt, connecting, pivot block (with tommy, No. 5)	...	1	...	...	1	...	...	...	1	...
21	Bolts, holding-down (with tommy, No. 6)	...	1	...	...	1	...	...	...	1	...
22	Plug, pivot, bottom end	...	1	...	...	1	...	...	...	1	...
23	,, ,, top end	...	1	...	...	...	...	...	...	...	1
24	Arm, radial, racer	...	...	...	1	...	...	...	...	...	1
25	Racer (large, with tommy, No. 3) ...	...	...	1	1	...	1	...	...	...	1
26	,, (small, ,, ,, No. 4) ...	...	...	1	1	...	1	...	...	...	1
27	Pins, hinge, roof of shield and bolts, securing, worm, wheel traversing, and pinion, spindle elevating ...	1	...	...	...	...	...	...	...	...	1
28	Gland, valve, raising	...	...	...	...	...	...	1	...	...	1
29	Nuts, cover, air chamber, cylinder recoil	...	...	...	...	...	...	1	...	...	1
30	Nut, shaft, elevating	...	...	...	...	...	...	2	2	...	2
31	Connection, steel, pipe, copper, to pump (with tommy, No. 7)... ...	...	...	...	...	...	...	...	1	...	1
32	Gland, inner, cylinder recoil	...	...	...	...	...	...	...	1	...	1
33	,, outer, ,, ,, ...	...	...	...	...	...	...	...	1	...	1
34	Plug, air chamber, large cylinder recoil	...	...	...	...	...	...	...	1	...	1
35	Plug, air chamber, small cylinder recoil	...	...	...	...	...	...	...	1	1	...
36	Ram, cylinder recoil (socket, with tommy, No. 8)...	...	...	...	...	...	...	...	1	1	...

Digitized by Google

Appendix XI—*continued.*

Spanners and Special Implements for Land Service Mountings—*continued.*

Vocabulary No.	Description.	B.L. Disappearing. 13″·5.	10″, Marks I	10″, Marks II	9″·2, Marks I	9″·2, Marks II	6″, Marks I	6″, Marks II to IV	Proportions. Per mounting.	Proportions. Per work.
	Spanners—continued.									
37	Seating, recoil valve, cylinder recoil ...	...	...	...	...	...	...	1	1	...
38	Ring, packing, pump, lowering	...	...	...	...	...	1	1	...	1
39	Cover of springs, ram, cylinder recoil ...	...	...	...	1	...	...	...	...	1
40	Nut, bolt, head of ram, cylinder recoil, and shaft elevating, 3rd motion	...	...	...	1	...	...	...	...	1
41	Nuts, cover, cylinder recoil	...	...	...	1	...	...	...	1	...
42	Plug, centre, cylinder recoil	...	...	...	1	...	...	...	...	1
43	Ring, gland, cylinder recoil	...	...	...	1	...	...	...	1	...
44	Covers, recoil valves and plugs, air chamber, cylinder recoil	...	1	...	1	...	...	...	1	...
45	Cover of springs, ram, cylinder recoil ...	...	1	...	...	...	...	...	...	1
46	Nuts, adjusting shaft, 3rd motion, gear elevating	...	1	...	1	...	...	...	...	1
47	Nut, bolt, head of ram, cylinder recoil, and shaft elevating, 3rd motion	...	1	...	...	...	...	...	...	1
48	Nuts, cover, cylinder recoil	...	1	...	...	...	...	...	1	...
49	Ring, gland, cylinder recoil	...	1	...	...	...	...	...	1	...
50	Seating, recoil valves, cylinder recoil ...	...	1	...	1	...	...	...	1	...
51	Valve, filling, cylinder recoil...	...	1	...	1	...	1	1	...	1
52	,, raising, cylinder recoil, and nuts, adjusting shaft, 1st motion, gear elevating	...	1	...	1	...	...	...	...	1
53	Ring, packing, pump, lowering	...	1	...	1	...	...	...	...	1
54	Buckets, small, for pumps	...	...	1	...	1	...	...	1	...
55	Bolts, cover, cylinder and bolts, buffer (with tommy, No. 10)	...	...	1	...	1	...	...	1	...
56	Bolts, cover, cylinder jump (with tommy, No. 11)	...	...	1	...	1	...	...	1	...
57	Covers, valve, pumps	...	...	1	...	1	...	...	1	...
58	Gland, valve, raising	...	...	1	...	1	...	...	1	...
59	Hexagon, ring ($4\frac{7}{8}$ inches across flats) ...	...	...	1	...	1	...	...	1	...
60	,, ,, (4 ,, ,,) ...	...	...	1	...	1	...	...	1	...
61	Studs, gland, cylinder jump	...	...	1	...	1	...	...	1	...
62	Unions, pipe, copper, large	...	...	1	...	1	...	...	1	...
63	,, ,, ,, small	...	...	1	...	1	...	...	1	...
64	Body of relief valve, bolt locking	1	...	...	...	...	...	...	1	...
65	Caps, cylinders, running in and out, and traversing breech mechanism	1	...	...	...	...	...	...	1	...
66	Gland, cylinder recoil	1	...	...	...	...	...	...	1	...
67	Glands, inner, buffer, stop, hydraulic ...	1	...	...	...	...	...	...	1	...
68	,, outer, lower, buffer, stop, hydraulic	1	...	...	...	...	...	...	1	...
69	,, outer, upper, buffer, stop, hydraulic	1	...	...	...	...	...	...	1	...

Digitized by Google

Appendix XI—*continued.*

Spanners and Special Implements for Land Service Mountings—*continued.*

Vocabulary No.	Description.	B.L. Disappearing. 13″-5.	B.L. Garrison. 12″.	Q.F. 12-pr.	Pumps, air, double.	Proportions. Per mounting.	Proportions. Per work.
	Spanners—continued.						
70	Gland, inner, bolt locking	1	...	...	...	1	...
71	,, outer, ,, ...	1	...	...	...	1	...
72	,, inner, cylinder, traversing breech mechanism	1	...	...	...	1	...
73	,, outer, cylinder, traversing breech mechanism	1	...	...	...	1	...
74	Nuts, adjusting, brake, shaft, 1st motion, gear elevating	1	...	...	...	1	...
75	Nuts, adjusting, shaft, 3rd motion, gear elevating	1	...	...	...	1	...
76	Nuts, adjusting, valve recoil	1	...	...	...	1	...
77	,, valve, relief, bolt locking (with tommy, No. 24)...	1	...	..	...	1	...
78	Nut, bolt, securing, connecting rod to elevator (with tommy, No. 25)	1	...	...	...	1	...
79	Nuts, cover, cylinder recoil	1	...	...	...	1	...
80	,, buffer, stop, hydraulic (with tommy, No. 26)	1	...	...	...	1	...
81	Nuts, piston-rod, cylinders, running in and out and traversing breech mechanism ...	1	...	...	...	1	...
82	Piston, cylinder, running in and out breech mechanism	1	...	...	...	1	...
83	Piston, cylinder, traversing breech mechanism (with tommy, No. 27)... ...	1	...	...	...	1	...
84	Plug, rod, connecting, ram, cylinder recoil	1	...	...	...	1	...
85	Rammer, hydraulic (4·6″ and 4·5″ across flats)	1	...	...	...	1	...
86	Rammer, hydraulic (5·625″ and 2·9″ across flats)	1	...	...	...	1	...
87	Ring, securing leather packing, centre pivot pipe	1	...	...	...	1	...
88	Ring, securing cotton packing, centre pivot pipe...	1	...	...	...	1	...
89	Ring, piston, cylinders, running in and out and traversing breech mechanism (with tommy, No. 28)...	1	...	...	...	1	...
90	Seating, recoil valves (with tommy, No. 26)	1	...	...	...	1	...
91	Spindle, recoil valves	1	...	...	...	1	...
92	Valves, recoil (with tommy, No. 26)	1	...	...	...	1	...
94	Cradles, lubricators, and guard screws ...	...	...	1	...	1	...
95	Nuts, adjusting cones, gear elevating ...	...	1	...	...	...	1
96	Gland, delivery valve, also spring box and small plunger	...	...	...	1	...	1
97	Nut, large, plunger	...	...	...	1	...	1
98	Pipe, connecting, also valve stop, water suction	...	...	...	1	...	1

57—Gen.No. 5327 71—1 5036

Digitized by Google

Appendix XI —*continued.*

Spanners and Special Implements for Land Service Mountings—*continued.*

Vocabulary No.	Description.	R.M.L. 10″·4 Barbette.	R.M.L. 9″ High angle. Mark III	R.M.L. 7″ Moncrieff.	R.M.L. Siege. 6″·8 gun.	R.M.L. Siege. 40 and 25 pr.	Gauge pressure, dead weight testing, Mk. II.	Indicator pressure, spring.	Pumps, air, double.	Proportions. Per mounting.	Proportions. Per work.	Remarks.
	Spanners—continued.											
99	Valve, delivery, also valve, water suction	...	...	...	...	...	...	...	1	...	1	
100	Screw, closing, delivery valve	...	...	...	...	...	...	...	1	...	1	
101	Gland, piston	...	...	...	...	...	1	...	...	...	...	1 per gauge
102	Connections	...	...	...	...	...	1	...	...	...	...	,, ,,
103	Indicator pressure, also connections, carriages, garrison, disappearing	...	...	...	...	...	...	1	...	...	...	1 per indicator.
104	Connections, indicator pressure, also plug and gland connection and filling valve, carriages, garrison, disappearing	...	...	..	...	...	...	1	...	...	...	33407 E. / 1537 — 1 per indicator.
109	Double-ended (1″ and $\frac{7}{8}$″) ...	...	...	...	1	...	...	...	...	1	...	
110	,, ,, ($\frac{7}{8}$″ and $\frac{3}{4}$″) ...	...	...	...	1	...	...	...	...	1	...	
111	$1\frac{1}{4}$″ lock nut	...	...	...	1	...	...	...	...	1	...	
112	,, ,, and air plug ...	...	...	...	1	...	...	...	...	1	...	
113	Gland, cylinder recoil	...	...	...	1	...	...	...	...	1	...	
114	Socket, 2″	...	...	...	1	...	...	...	...	1	...	
115	Lock nut	...	...	...	...	1	...	...	...	...	...	1 per 3 or less number.
116	Small	...	...	...	...	1	...	...	...	...	...	1 per 3 or less number.
117	Nut, friction cone, gear elevating	...	...	*1	...	...	...	...	...	1	...	*Mark I mounting.
118	Adjusting valve, recoil	...	1	...	...	...	...	...	...	1	...	
119	Bolt, capsquare (with tommy, No. 12)	...	1	...	...	...	...	...	...	...	1	
120	Bolting cradle together ...	...	1	...	...	...	...	...	...	...	1	
121	Coupling, pipes connecting hydraulic cylinders and air cylinders...	...	1	...	...	...	...	...	...	...	1	
122	Coupling, supply pipe, gland, supply valve, and cap, rear...	...	1	...	...	...	...	...	...	...	1	
123*	Cylinder recoil	...	1	...	...	...	...	...	...	...	1	*Mark II spanner.
124	Gland, cylinder recoil	...	1	...	...	...	...	...	...	...	1	
125	,, outer, valve recoil ...	...	1	...	...	...	...	...	...	...	1	
126	Nut, ram	...	1	...	...	...	...	...	...	...	1	
127	Valve, discharge, with screwdriver	...	1	...	...	...	...	...	...	1	...	
128	Valves, oil, level and supply ...	...	1	...	..	...	...	...	..	1	...	
129	Axle, truck, slide L	1	...	...	...	...	...	...	...	...	1	
130	,, wheel, traversing ...	1	...	...	...	...	...	...	...	...	1	
131	Nozzle, and plug cock, apparatus, washing out... ...	1	...	...	...	...	...	...	...	...	1	

Digitized by Google

Appendix

Spanners and Special Implements for Land

Vocabulary No.	Description.	Q.F.		R.M.L. 12″·5		
		4″·7 C.P.	6-pr. recoil.	Casemates and dwarfs.	Small Port. 6-ft. recoil.	Small Port. 7-ft. recoil.
	Spanners—continued.					
132	Nut, securing, rammer, head	...	...	...	...	...
133	Piece, union, apparatus, washing out (with tommy, No 14)	...	...	...	...	...
134	Pinion, spindle, elevating and coupling pipe, apparatus, washing out	...	...	...	...	...
135	Tightening, wire rope, gear loading	...	...	...	...	...
136	Bolts, connecting, pivot block (with tommy, No. 3)	...	...	...	...	...
137	Bolts, holding-down	...	...	...	...	...
138	Caps, valves, inlet and outlet, and gland, crank spindle, jack-lifting hydraulic, rear roller	...	...	1	1	1
139	Plugs, valves, inlet and outlet, and gland outside release valve, jack-lifting hydraulic, rear roller	...	...	1	1	1
140	Pump, and pump cap (with tommy, No. 15), jack-lifting hydraulic, rear roller	...	...	1	1	1
141	Screws, cover and crank, jack-lifting hydraulic, rear roller	...	...	1	1	1
142	Screws, securing, packing of ram plunger cap, and air screw, jack-lifting hydraulic, rear roller	...	...	1	1	1
143	Tightening chain, slide L (socket, with tommy, No. 16)...	...	...	1	1	1
144	Cap, pump, hydraulic lift	...	...	...	1	1
145	Cover, cistern, and run-off plug, hydraulic lift	...	...	...	1	1
146	Valve, release, also filling plug and pump plunger, hydraulic lift	...	...	...	1	1
147	Valve, suction, hydraulic lift	...	...	...	1	1
148	Jack-lifting hydraulic, Tangye's (with tommy, No. 17)	...	...	...	...	...
149	Cradle lubricators	1	...	...	...	...
150	Socket, plunger, controlling running out, with screw-driver ends for filling plugs, and screws for shield	1	...	...	...	...
151	Nut, socket and cone...	...	1	...	...	...
152	Screw, set, pedestal	...	...	...	...	...
153	Nut, friction cone, gear elevating	...	...	...	...	...
154	Bolts, bearings, box, screw elevating (cranked)	...	...	...	...	...
155	,, ,, ,, ,, (plain) ...	...	...	...	...	...
162	Nut, spindle, spring, front trunk block... ...	...	...	...	...	...

Digitized by Google

XI—*continued.*

Service Mountings—*continued.*

R.M.L.				Field machine gun, infantry, Nord. 3 barrel, & Gard. 2 barrel.	Jack, hydraulic, Tangye's.	Proportions.		Remarks.
12″ 35-ton.	10″·4 Barbette.	10″	16-pr.			Per mounting.	Per work.	
...	1	...	...	...	...	...	1	
...	1	...	...	...	...	...	1	
...	1	...	...	...	...	...	1	
...	1	...	...	...	...	...	1	
...	1	...	...	...	...	1	...	
...	1	...	...	...	...	1	...	
1	...	...	...	...	...	...	1	
1	...	...	...	...	...	...	1	
1	...	...	...	...	...	...	1	
1	...	...	...	...	...	...	1	
1	...	...	...	...	...	...	1	
1	...	...	...	...	...	...	...	1 per 6 guns or less.
...	...	...	...	...	...	...	1	
...	...	...	...	...	...	...	1	
...	...	...	...	...	...	...	1	
...	...	...	...	...	...	...	1	
...	...	...	...	...	1	...	...	1 per jack.
...	...	...	...	...	...	1	...	
...	...	...	...	...	...	1	...	
...	...	...	...	...	...	1	...	
...	...	...	...	1	...	1	...	
...	1	...	...	...	...	...	1	
...	...	...	1	...	...	...	...	1 per 6 guns or less.
...	...	...	1	...	...	...	...	†7 ft. parapet C, Mark II only.
...	...	†1	...	...	...	...	1	

Digitized by Google

Appendix

Spanners and Special Implements for Land

Vocabulary No.	Description.	B.L. 6″ Barbette. 10″ Mark I. V.C.P.	B.L. 9″·2 Barbette. 10″ Mark I.	B.L. 13″·5 Disappearing.	B.L. 10″ Disappearing. Mark I.
	Spanners—continued.				
163	Glands, valve, filling or drain, and union pipe, filling	...	...	...	...
164	Glands, spindles, valve recoil, for use with No. 165 spanner	...	...	...	...
165	Unions, pipe, connecting air chambers	...	...	...	...
166	Valves, filling, and oil level	...	...	...	...
167	Spindles, valves, recoil	...	...	...	...
168	Piston-rod, and pipe connecting hydraulic chambers	...	...	...	...
169	Pipe connecting hydraulic chambers, and nut, piston-rod	...	...	...	...
170	Gland, rod, piston, outer, and cap, air buffer ...	...	...	...	...
171	Gland, rod, piston, inner	...	...	...	...
172	Plugs, steel, hydraulic chambers	...	...	...	...
173	Glands, ram, inner and outer	...	...	...	...
174	Pipe, connections to pump (with tommy, No. 29)	...	...	...	1
	Drivers, screw.				
2	Plugs, pump, lowering	...	...	...	1
3	Valves, rotating, rod, piston	1	...	...	...
4	Bearings, axle roller, carriage, and pinion spindle	...	1	1	...	...
5	Bearings, axle roller, carriage, racer, outer, rack traversing, and blocks, metal	...	...	...	...
6	Plug of centre pivot pipe	...	...	1	...
7	Buffer, stop, hydraulic	...	...	1	...
8	Cradle, cover, screws	...	...	...	...
9	(Three-legged)	...	...	...	...
10	Indicator pressure, carriages, garrison, disappearing	...	...	...	...
11	Screws, spindles, valve recoil, and cover, valve, air chamber	...	...	...	...
	Levers.				
1	Cap, cylinder recoil	...	...	...	...
2	Lengthening, gland spanners, cylinder recoil...	...	...	...	...
3	" " " " ...	...	...	...	1

Digitized by Google

XI—*continued.*

Service Mountings—*continued.*

B.L.		Q.F.	R.M.L.				Indicator pressure, spring.	Proportions.		Remarks.
Disappearing.			10″·4	9″		Siege.				
9″·2	6′			High angle.						
				Marks						
Mark I.	Marks II to IV.	4″·7 C.P.	Barbette.	I	II	6″·6 gun.		Per mounting.	Per work.	
...	...	...	...	...	1	...	..	...	1	
...	...	...	...	...	1	...	...	...	1	
...	...	...	...	...	1	...	...	...	1	
...	...	...	...	...	1	...	...	...	1	
...	...	...	...	...	1	...	...	...	1	
...	...	...	...	...	1	...	...	...	1	
...	...	...	...	...	1	...	...	...	1	
...	...	...	...	...	1	...	...	...	1	
...	...	...	...	...	1	...	...	...	1	
...	...	...	...	]	...	...	...	...	1	
1	...	...	...	...	...	...	...	...	1	71—1 / 4922
1	...	...	...	...	..	...	...	...	1	
...	...	...	...	...	...	...	...	...	1	
...	...	...	...	...	...	...	...	...	1	
...	...	...	1	...	...	...	...	...	1	
...	...	...	...	...	...	...	...	1	...	
...	...	...	...	...	...	...	...	1	...	
...	...	1	...	...	...	...	...	1	...	
...	...	...	...	...	...	1	...	1	...	
...	...	...	...	...	...	...	1	...	...	1 per indicator.
...	...	...	...	...	1	...	...	...	1	
...	1	...	...	...	...	...	...	...	1	
...	1*	...	...	...	...	...	...	...	1	
1	...	...	...	...	...	...	...	...	1	

*Also for 6-inch Mark I.

Digitized by Google

Appendix

Spanners and Special Implements for Land

Vocabulary No.	Description.	B.L. Barbette. 10″ Marks I	10″ Marks II	10″ Marks III	9″·2 Marks I	9″·2 Marks II	Disappearing. 13·5	10″ Marks I	10″ Marks II	9″·2 Marks I	9″·2 Marks II
	Loops, lifting.										
1	Valve, pump, running back	1	...	...	1	...	...	..	...	...	...
2	,, ,, ,, ...	..	1	1	...	1	...	...	...	...	...
3	Valve (pump)	...	...	...	...	...	...	...	1	...	1
4	,, delivery	...	...	...	...	...	...	...	...	...	...
5	Ring, packing, pump, lowering, and ram gland, 10″ and 9″·2, Mark I, also ram gland, 6″, Mark II to IV ...	...	...	...	...	...	...	2	...	2	...
6	Worm, elevating, also withdrawing axles, roller	...	...	...	...	...	...	...	...	...	...
	Tommies.										
1	Adjusting pins, frame supporting rear	...	1	...	...	1	...	...	...	...	...
2	For spanner, No. 8	...	1	1	...	1	...	...	...	...	...
3	,, ,, ,, 25 and 136	...	1	1	...	1	...	...	...	...	...
4	,, ,, ,, 24 and 26	...	1	1	...	1	...	...	...	..	...
5	,, ,, ,, 20	1	...	...	1	...	...	...	...	...	...
6	,, ,, ,, 21	1	...	...	1	...	...	...	...	...	...
7	,, ,, ,, 31	...	..	...	...	...	...	...	...	...	...
8	,, ,, ,, 36	...	...	..	...	...	...	...	...	...	...
9	Bolt, clamping, elevator	...	...	...	...	...	...	1	...	1	...
10	For spanners, No. 55, 57, and 61 ...	...	...	...	...	...	...	...	1	...	1
11	,, ,, ,, 56	..	...	...	...	...	...	...	1	...	1
12	,, ,, ,, 119	...	...	...	...	...	...	...	...	...	...
13	Screw, adjusting, ball bearings, trunnion	...	...	...	...	...	...	...	...	...	...
14	For spanner, No. 133	...	...	...	...	..	...	...	...	...	...
15	,, ,, ,, 140	...	...	...	...	...	...	...	...	...	...
16	,, ,, ,, 143	...	...	...	...	...	...	...	...	...	...
17	,, ,, ,, 148	...	...	...	...	...	...	...	...	...	...
18	(Large), hydraulic lift	...	...	...	...	..	...	...	...	...	...
19	(Small), ,, ,, ...	...	...	...	...	...	...	...	...	...	...
20	Carriages, Q.F. recoil, 6 pr.	...	...	...	...	...	...	...	...	...	...
21	For spanner, hydraulic buffer, No. 21	...	...	...	...	...	...	...	...	...	...
22	,, ,, ,, ,, 45	...	...	...	...	...	...	...	...	...	...
23	Carriage, siege, R.M.L. 9″·6 gun ...	...	...	...	...	...	...	...	...	...	...
24	For spanner, No. 77	...	...	...	...	...	1	...	...	...	...
25	,, ,, ,, 78	...	...	...	...	...	1	...	...	...	...
26	,, ,, ,, 80, 90 and 92	...	...	...	...	...	1	...	...	...	...
27	,, ,, ,, 83	...	...	...	...	...	1	...	...	...	...
28	,, ,, ,, 89	...	...	...	...	...	1	...	...	...	...
29	,, ,, ,, 174	...	...	...	...	...	...	1	...	1	...

71—1
4922

71—1
4922

Digitized by Google

XI—*continued.*

Service Mountings—*continued.*

B L.	Q.F.		R.M.L.												
Disappearing.			12″ 5			12″		10″·4	9″	Siege.			Proportions.		
6″, Mark				Small Port.					High angle.						
II to IV.	4″ C.P.	6-pr. recoil.	Casemate and dwarf.	6-ft. recoil.	7-ft. recoil.	35-ton.	25-ton, or 11″.	Barbette.	Mark III.	6″·6 gun.	Jack, hydraulic, Tangye's.	Pumps, air, double.	Per mounting.	Per work.	Remarks.
...	...	...	...	...	...	...	...	...	...	...	...	...	...	1	
...	...	...	...	...	...	...	...	...	...	...	...	...	...	1	
...	...	...	...	...	...	...	...	...	...	...	...	...	1	...	
...	...	...	...	...	...	...	...	...	...	...	...	1	...	1	
...	...	...	...	...	...	...	...	...	...	...	...	...	...	...	2 to a set.
2	...	...	...	...	...	...	...	...	...	...	...	...	...	2	
...	1	...	...	...	...	...	...	...	...	...	...	...	1	...	
...	...	...	...	...	...	...	...	...	...	...	...	...	...	1	Issued with spanners.
...	...	...	...	...	...	...	...	...	...	...	...	...	...	...	
...	...	...	...	...	...	...	...	1	...	...	...	...	...	...	
...	...	...	...	...	...	...	...	...	...	...	...	...	...	...	
...	...	...	...	...	...	...	...	...	...	...	...	...	...	...	
...	...	...	...	...	...	...	...	...	...	...	...	...	...	...	
1	...	...	...	...	...	...	...	...	...	...	...	...	...	...	
1	...	...	...	...	...	...	...	...	...	...	...	...	...	...	
...	...	...	...	...	...	...	...	...	...	...	...	...	...	1	
...	...	...	...	...	...	...	...	...	...	...	...	...	...	...	Issued with spanners.
...	...	...	...	...	...	...	...	...	...	...	...	...	...	...	
...	...	...	...	...	...	...	...	...	1	...	...	...	...	...	
...	...	...	...	...	...	...	...	...	1	...	...	...	1	...	
...	...	...	...	...	...	...	...	1	...	...	...	...	...	...	Issued with spanners.
...	...	...	1	1	1	1	...	...	...	...	...	...	...	...	
...	...	...	1	1	1	1	...	...	...	...	...	...	...	...	
...	...	...	...	...	...	...	...	...	...	...	1	...	...	...	
...	...	...	...	1	1	...	...	...	...	...	...	...	...	1	
...	...	...	...	1	1	...	...	...	...	...	...	...	...	1	
...	...	1	...	...	...	...	...	...	...	...	...	...	1	...	
...	...	...	1	...	1	...	...	...	...	...	...	...	...	...	Issued with spanners.
...	...	...	...	...	...	...	1	...	...	...	...	...	...	...	Issued with spanners: tension buffers only.
...	...	...	...	...	...	...	...	...	...	1	...	...	1	...	
...	...	...	...	...	...	...	...	...	...	...	...	...	...	...	Issued with spanners.
...	...	...	...	...	...	...	...	...	...	...	...	...	...	...	
...	...	...	...	...	...	...	...	...	...	...	...	...	...	...	
...	...	...	...	...	...	...	...	...	...	...	...	...	...	...	
...	...	...	...	...	...	...	...	...	...	...	...	...	...	...	
...	...	...	...	...	...	...	...	...	...	...	...	...	...	...	

Digitized by Google

Appendix XI—*continued.*

Spanners and Special Implements for Land Service Mountings—*continued.*

Vocabulary No.	Description.	B.L.											Q.F.			Proportions.		Remarks.
		6″	Barbette.				Disappearing.			Travelling.								
		V.C.P.	10″, Marks I	10″, Marks III	9″·2 Mark I	6″	10″ Mark I	9″·2 Mark I	6″ Marks II to IV	5″, 6-ft. parapet.	4″, 6-ft. parapet.	4″·7 C.P.	12 pr.	Medium slides.	Per mounting.	Per work.	
	Wrenches, pivot.																	
5	Band, elevating (with tommy)	...	..	...	...	...	...	...	1	1	1	...	...	...	...	1		
6	Band, elevating ...	...	1	1	1	...	...	...	...	...	...	...	...	..	...	1		
7	Band, elevating ...	1	...	...	...	1	...	...	...	...	...	...	...	...	...	1		
8	Band, elevating (with keep screw spanner)	...	...	...	...	...	1	1	...	...	...	...	...	...	...	1		
9	Arc, elevating	...	...	...	...	...	...	...	...	...	...	1	...	...	1	...		
10	Arc, elevating plunger controlling, and plugs filling, air and drain	...	...	...	...	...	...	...	...	...	...	...	1	...	1	...		
	Wrenches, circular, hydraulic buffer.																	
1	Gland, rings, and ...	...	...	...	...	...	...	...	...	...	...	...	...	1	...	1	No. 8 slide.	
2	Screwdriver, securing valve and valve box, with tommy	...	...	...	...	...	...	...	...	...	...	...	...	1	...	1	,,	,,

Digitized by Google

APPENDIX XII.

57
Gen. No. 3331

Instructions for repriming and rebridging electric drill tubes.
(Referred to in paragraph 130.)

7615
102

Vent-sealing Electric Tubes.

1. Unscrew the centre and bottom portions from the head.

2. Clean the tube with a hog's hair brush dipped in methylated spirits.

3. Clean the ends of the poles with a smooth file, taking care not to remove more of the metal than necessary.

4. Tip the poles with a small quantity of pure tin, using resin as a flux.

5. Solder one end of the wire (platinum silver ·21 grains per yard) to one pole with pure tin, and stretch the wire across a piece of wood as a support and solder it to the other pole, then cut off the loose end with a pair of scissors.

6. Test the bridge with a Menotti Test Battery. A good deflection of the needle should result.

7. Stop the holes in the head of the P tube with luting, or the holes in the middle portion of the V tube with white fine paper.

8. Screw on the middle portion of the tube and fill it with priming composition, tapping the tube to ensure the priming being in contact with the bridge.

9. Screw on the bottom end of the tube.

10. Pack in the tube boxes, close with a tape band and shellac, and mark the labels "Refilled," with station and date.

7615
10a

Electric Tubes, No. 11.

1. Clean the poles.

2. Solder on a fresh bridge.

3. Screw on the body.

4. Gum two white fine discs, about ·4-inch diameter, over the escape holes.

5. Fill the body with priming composition till it reaches the bottom of the screw thread.

6. Screw in the brass pin.

Digitized by Google

Digitized by Google

38407
Equip.
1639

II.—DETAILS OF EQUIPMENT.

CONTENTS.

PAGE

1. ARMAMENTS—
   - B.L. 12-in. to 8-in. Guns 296
   - B.L. 6-in. to 4-in. Guns 304
   - R.M.L. 17·72-in. and 16-in. Guns 311
   - R.M.L. 12·5-in. to 7-in. Guns 320
   - R.M.L. 6·6-in. to 40-pr. Guns 336
   - R.B.L. 7-in. 40-pr. and 20-pr. Guns 345
   - R.M.L. 8-in. to 6·3-in. Howitzers 353
   - S.B. Cast-iron Guns, Howitzers and Carronades 359
   - 4·7-inch and 12-pr. Q.F. Guns 366
   - Hotchkiss Q.F. 6-pr. Gun, Mark I., on Elastic Stand 369
   - Hotchkiss Q.F. 6-pr. Gun, Mark II., on Recoil Cone and Embrasure Mountings.... 372
   - Nordenfelt Q.F. 6-pr. Gun, Mark III., on Recoil Cone and Embrasure Mountings 377
   - Hotchkiss Q.F. 3-pr. Gun, Mark II., on Travelling Carriages 381
   - Nordenfelt, Q.F. 3-pr. Gun, on Travelling Carriage 389
   - Hotchkiss, Q.F. 3-pr. Gun on Elastic Frame Stands 397
   - Tools, Ordnance, for Examining Quick Firing Ordnance ... 399
   - Ammunition, &c., for Hotchkiss and Nordenfelt Quick-firing Ordnance.... 399
   - Machine Guns 400
   - Movable Armaments 407
   - Siege Train Companies 434
   - Magazine Stores 442
   - Army Books and Forms for Armaments 451
2. GENERAL LISTS OF COMPONENT AND SPARE PARTS.... 453
3. STAFF, AND SERVICE AND DEPOT COMPANIES.... 681
4. ROYAL ARTILLERY, REGIMENTAL DISTRICT ESTABLISHMENTS SCHOOL OF GUNNERY, R.A. STAFF CLERKS, R.A. BAND, ROYAL MALTA ARTILLERY, BERMUDA MILITIA ARTILLERY AND LOCAL COMPANIES OF ROYAL ARTILLERY 703

Digitized by Google

1.—ARMAMENTS.

Referred to in Paragraph 57.

EQUIPMENT OF B.L. 12-IN., 10-IN., 9·2-IN., AND 8-IN. GUNS.

	TABLE 1.	Proportions.	Remarks.
	Woolwich Store Charge, No. 2.		
75 / 7 / 5316	**Bags,** sand, common*	1 per gun on disappearing carriage.	To place in front of muzzle of gun when firing electric tubes, to dry the vent before commencing practice (*see* Paragraph 189).
57	**Bars,** crow, 6-feet	1 per work	For general use.
Malta / 9205	**Lamps,** tracing†	2 per gun...	For night firing.
	Woolwich Store Charge, No. 4.		
57	**Carts,** shot	1 per sub-district ...	For moving projectiles.
D'port. / 5104	**Drugs,** gun, 25 tons	1 per district	For 9·2-inch and 8-inch.
	Woolwich Store Charge, No. 5.		
	Brushes, water, carriage	2 per gun...	For cleaning projectiles, &c.
	Woolwich Store Charge, No. 7.		
	Chests, tool, filled { No. 3 D ... ... ; ,, 11 A	As authorised by paragraph 201. ; 1 per work.	For repair of carriages and slides.
	Boards, range...	1 for every 2 guns of same nature, or where mounted singly 1 per gun.	To be provided locally.‡
	Cans, oil, lubricating, G.S.§... ...	1 per gun...	For use of armament artificers.
	Drivers, screw, G.S., 24-inch ...	1 ,, ...	For general use.
	Hammers, claw, 28-oz.	2 per battery	For general use.

54 / Gibraltar / 5740 / 57 / Cape / 5043

* To be filled locally with sand or earth.

† Oil and wick for these are supplied by Army Service Corps, as required.

‡ The fuze scale is either painted on the board, or printed on paper and attached to the board.

§ When these cans become unserviceable they will be replaced by "Can, lubricating, No. 9."

NOTE.—As regards the proportion "per district" or "per sub-district" throughout the tables, *see* Para. 70 to 76.

Digitized by Google

Equipment of B.L. 12-in., 10-in., 9·2-in., and 8-in. Guns—*continued.*

TABLE 1—*continued.*	Proportions.	Remarks.	
Woolwich Store Charge, No. 8.			
Spanners, armament artificers, double-ended (1½-in. and 1⅜-in.; 1¼ ,, 1⅛ ,,; 1 ,, ⅞ ,,; ¾ ,, ⅝ ,,; ½ ,, ⅜ ,,)	1 set per work ...	For adjusting and tightening up bolts and nuts.	
Spanners, McMahon, 15-inch ...	1 per gun...	For tightening nuts, &c.	
Wrenches, knock up, G.S.	1 per work	For general purposes.	
TOOLS, ORDNANCE.			
Tools, examining, painting and lacquering rifled ordnance ... sets	1 per district	For detail of tools, *see* Table A, pages 140 to 145	
Woolwich Store Charge, No. 10.			
Filters, hydraulic jack	1 per work	For filling jacks, &c.	
Frames, store, hydraulic jack ...	1 per work or per 4 jacks	For keeping jacks under pressure	
Jacks, lifting, hydraulic, G.S. (30 tons; 20 ,,)	10 in. and above 1 per work ... ... 8-in. and 9·2-in. 1 per work unless 30 ton jack is provided as above	For General Purposes.	57 H. Kong 9267
Pad, frame, store hydraulic jack ...	1 per hydraulic lifting jack		57 Gen. No. 6133
Woolwich Store Charge, No. 11.			
Chalk, white ... ... lbs.	2 per gun	Annual supply.	
	1 per gauge, pressure dead weight testing	For lubricating gauge.	
Glycerine ... ... ,,	65 per barbette mounting, 9·2-inch, Mark II, and 10-inch, Marks II and III	For hydraulic pivots	71 1 4883
Methylated spirits ... galls.	As required	For H.P. cylinders.	
Oil, mineral ... . ,,	As required	For hydraulic buffers or H.P. cylinders.	57
Soda, carbonate, dry ... ... lbs.	As required	For H.P. cylinders.	Vocab.
Solution, caustic soda, 1 pint bottles	As required	For reservoirs, compressed air.	2178
Woolwich Store Charge, No. 13.			
Forges, field, R.A., Mark IV. ...	As authorised. *See* paragraph 201.	For use of armament artificers.	
Woolwich Store Charge, No. 14.			
Bands, elevating, removable ...	1 per gun...	For guns with removable elevating bands.*	57 Vocab. 2898
Barrows, projectile (No. 5 ...; ,, 6 ...; ,, 11 ...)	1 per B.L. 10-inch and 9·2-inch guns; 1 per B.L. 12-inch gun; 1 per B.L. 9·2-inch and 8-inch guns	For service at the guns. Only 1 barrow, either No. 5 or No. 11, for each 9·2-inch gun.	57 Vocab. 2891

* Elevating bands for the earlier issues of B.L. guns are fixtures, and as such are a component of the gun, and not accounted for as a separate store. Bands issued separately from the gun, should, when placed in position, be secured as directed in paragraph 6238, "List of Changes in War Matériel."

Digitized by Google

Equipment of B.L. 12-in., 10-in., 9·2-in., and 8-in. Guns—*continued.*

TABLE 1—*continued.*	Proportions.	Remarks.
Woolwich Store Charge, No. 14—continued.		
Buckets, sponge, garrison	1 per gun	For general use.
Carriages, garrison { B.L. 12-inch; B.L. Barbette (10 inch, 9·2-inch, and 8-inch); B.L. disappearing (10-inch and 9·2-inch*) }	1 per gun according to description of mounting approved.	For component and spare parts, *see* pages 476 to 519.
57 D'port. 5473 **Connections,** indicator, pressure ...	1 per disappearing carriage.	For connecting indicator to recoil cylinder.
Covers { carriage, garrison, disappearing, and gun, B.L.	1 per 10-in. and 9·2-in. gun on disappearing carriage.	
Covers { gear, firing, electric, No. 1	1 per 10-inch, Marks I and II, and 9·2-inch, on disappearing carriages.	
57 Gen. No. 5056	1 per 10-inch, Mark I, and 9·2-inch, Marks I, Ia, and Ib on barbette mountings.	
Gauges, pressure, dead weight testing, Mark II.	1 per sub-district ...	For disappearing carriages only.
Gyns, triangle, with appurtenances, heavy, tubular, Mark II.†	1 per sub-district, or 2 if more than 3 works	For mounting and dismounting ordnance.
Handspikes, common, 7 ft. ...	2 per gun...	Not to exceed 12 per work.
Holdalls, gun appurtenances, B.L. garrison carriages‡	1 per carriage.	
Indicators, pressure, spring, Mark II.	1 per disappearing carriage.	
Levers { carrying projectile†† ...	1 per gun...	For 8-inch Mark VII guns.
Levers { iron-shod, slide, L, 5 feet...	2 ,,	
Measures, hydraulic buffer, filling	1 per work	For filling cylinders of disappearing carriages and hydraulic buffers.
Pumps, air, double, carriage, garrison, H.P.§	1 per work of 3 or less disappearing carriages. 2 per work of more than 3 disappearing carriages.	
57 Vocab. 2891 **Reservoirs,** compressed air‖ ...	1 per disappearing carriage.	
57 24 1839 **Sabots,** barrows, projectile { No. 1	1 per 12-in. projectile, except Palliser shot.	For No. 6 projectile barrow
Sabots, barrows, projectile { No. 2	1 per 12-inch Palliser shot.	

* For ingredients of liquid and quantities thereof, *see* paragraphs 460 and 567.

† Complete with 1 gyn tackle, 1 erecting ditto (except for Mark II gyns), 4 windlass levers with ropes, 3 wood trucks, 3 slings of 9-inch rope (16, 7, and 3 feet long), and lashing for short slings. A gyn tackle consists of 18 fathoms of 5-inch white boll (or hawser-laid) rope, with 2 treble 15-inch Bothway blocks. An erecting tackle consists of 7 fathoms of 2½-inch white rope, with 1 single 8-inch Admiralty block; it is employed to raise the gyn tackle to the head of the gyn. There are also required 1 8-inch lever, and 4 heavy drag ropes (these will be supplied from the equipment of the work in which the gyn is required).

‡ The holdall is intended for use as a convenient receptacle for such of the gun appurtenances (such as the extractor and rimer) as are not in immediate use.

§ For spare parts *see* list on page 676.

‖ To be kept in Artillery Store when not in use.

†† Will not be issued when present supply is exhausted.

Digitized by Google

Equipment of B.L. 12-in., 10-in., 9·2-in., and 8-in. Guns—*continued.*

TABLE 1—*continued.*	Proportions.	Remarks.	
Woolwich Store Charge, No. 14—continued.			
Separators, air pump	1 per air pump	To separate the air from the water.	
Slides, L. { B.L. 12-in. ... ... B.L. Barbette (10-in., 9·2-in. and 8-in.)	1 per gun according to description of mounting approved.	For component and spare parts, *see* pages 520 to 542.	
Spanners and special implements for mountings.	... ...	*See* Appendix XI, pages 278 to 292.	
Wrenches, pivot	... ...		
Woolwich Store Charge, No. 15.			
Barrows, powder	1 per work	For moving powder or filled cartridges.	
Boxes, grease, 3 lbs.	1 per gun...	For general purposes.	
Woolwich Store Charge, No. 16.			
Chests, tool, empty, recoppering guns, B.L. 8-inch, (with tools shown in Appendix VIII, page 246).	As authorised by paragraph 201.	For guns with cup obturator.	
Spikes, gun, common	2 per gun.		
Woolwich Store Charge, No. 17.			
Box, spare parts, B.L. 8-in. to 13·5-in. guns	1 per gun...	For spare springs and other small spare parts of guns.	§ 7793
Boxes, obdurating pads	1 per gun...	To contain 3 pads and 3 sets of discs. Not required for 8-inch Mark VII guns.	
Ordnance, B.L.	As authorised.	For components and spare parts, also special implements and appurtenances, *see* pages 454 to 465.	73 3 3695
Woolwich Store Charge, No. 18.			
Brushes, piasaba, B.L., bore ...	1 per 2 guns per work...	For cleaning bores.	71 1
Canvas, packing, Hessian, 47-in., yards	2½ per gun	Annual allowance. For use with piasaba brush for cleaning bores.	4504 71
Covers { breech, B.L. ... ... muzzle, B.L.	1 per gun. 1 per gun, except for the 12-in. at Horse Sand and No Man's Land Forts.		4 4852 57
Extractors, cartridge, B.L. guns...	1 per 3 guns or 1 per work.		Ports. 3033
Keys, tampeon, large...	1 per 2 guns or less number, 10-in. to 8-in	For securing tampeon in gun.	
Rammers, B.L. (12-in. to 8-in.) ...	1 per gun.		
Ropes, drag, heavy ... ... prs.	2 per work.		

Digitized by Google

Equipment of B.L. 12-in., 10-in., 9·2-in., and 8-in. Guns—*continued.*

	TABLE 1—*continued.*	Proportions.	Remarks.
	Woolwich Store Charge, No. 18—continued.		
	Scrapers, ordnance B.L., 6-in. to 13·5-in.	1 per gun...	For cleaning powder chamber.
73	**Selvagees,** projectile...	2 per gun except 8-in ...	For slinging projectiles.
3	**Staves,** end, B.L. 12-in. (Mark II) ...	1 per piasaba brush.	
2691	**Staves,** end, B.L. 10-in. and 9·2-in. (Mark II)	1 per piasaba brush.	
	Staves, end, B.L. 8-in. (Mark II) ...	1 per piasaba brush.	
	Staves, end, B.L., 12-in., tampeon No. 1	1 per tampeon for Marks I and Ia guns.	
73	**Staves,** end, B.L., 12-in., tampeon No. 2	1 per tampeon, Marks VI and VII guns.	
3			
5732	**Staves,** tightening, B.L., 12-in., tampeon	1 per 2 or less number of guns per work.	
	Stores, for moving and mounting ...	Depend on mountings ...	For detail of stores, *see* Appendix I, pages 186 205.
38407			
Equip.	**Tackles** gun, 3-in. white rope ...	2 per gun...	If required.
1598	**Tackles** slinging side arms* prs.	1 per 12-in. B.L. gun in casemate.	For slinging side arms from roof of casemate.
	Tampeons, B.L., L.S. 12-in.	1 per gun.	For the muzzle.
71	**Tampeons,** B.L., L.S. 10-in., A	1 per gun, except those mounted on Mark I disappearing carriages	For the muzzle.
1	**Tampeons,** B.L., L.S. 10-in., B	1 per gun, mounted on Mark I disappearing carrriage	For the muzzle.
5025	**Tampeons,** B.L., L.S. 9·2-in., and 8-in. ...	1 per gun...	For the muzzle.
	Woolwich Store Charge, No. 20.		
	Bags, burster, B.L.† common (12-in. to 8-in.)	1 per empty common shell.	
	Bags, burster, B.L.† segment, 8-in. Mark VII	1 per empty segment shell.	
	Bearers, cartridge cylinder, Mark III‡	2 per gun...	For carrying cylinders.
	Cylinders, cartridge, B.L. (12-in. to 8-in.)	As required.	

* Consisting of:—

Woolwich Store Charge, 18.

Balls, tackle, slinging side arms	2	To be made up locally.
Blocks, loading tackle, No. 8	2	
Cordage, hawser, 3-strand, white, 1½-in.	10-ft.	
Eyes, tackle, slinging side arms	2	
Hooks ,, ,, ...	2	
Rings ,, ,, ...	4	

† Dowlas. The stock of serge for cast-iron and forged steel shells, and silk cloth for cast steel shells, will first be used up.

‡ These are only required when the cartridge stores are far from the guns.

Digitized by Google

Equipment of B.L. 12-in., 10-in., 9·2-in., and 8-in. Guns—*continued.*

TABLE 1—*continued.*	Proportions.	Remarks.
Woolwich Store Charge, No. 21.		
Bags, primer, filled, 7 drams ...	3 per empty common shell	
Cartridges, B.L., filled (12-in. to 8-in.	4 (¼ charges) per projectile*	All the cartridges in Royal Artillery charge will be kept filled as far as store accommodation will admit, *see* paragraph 80.
Gunpowder { rifle, pistol, R.F.G. and F.G.	As required	For bursting charges of Shrapnel shells.
Gunpowder { shell (P. and F.G.)..	,, ,, ...	For bursting charges of common shells.
Woolwich Store Charge, No. 22.		
Batteries and Keys, test and firing	1 per gun	For use with electric tubes.
Boxes, tube, vent-sealing, garrison	1 per gun.	To be hung up in the emplacement as a receptacle for one tin box of five tubes.
Fuzes† { percussion, direct action No. 3, Mark III.	1 per common shell.	
Fuzes† { time, sensitive, middle, No. 24	1 per Shrapnel shell.	
Implements, fuze and shell, Keys, fuze, universal	2 per gun...	The second key required for Mark III Direct Action fuze.
Lanyards { cocking friction tube, garrison } No. 3 ...	1 ,, ...	For guns with percussion locks, except lock D. 57 Ports'th. 1078
Lanyards { cocking friction tube, garrison } No. 3 ...	3 ,, ...	For guns not on disappearing carriages.
Lanyards { cocking friction tube, garrison } ,, 5 ...	3 ,, ...	For 10-in. and 9·2-in. B.L. guns on disappearing carriages.
Primers, Shrapnel shell	1 per empty Shrapnel shell	Issued in cylinders containing 10 each.
Tubes, vent-sealing‡ { electric, P	1 per round.	
Tubes, vent-sealing‡ { percussion	1 ,,	
Woolwich Store Charge, No. 24.		
Gauges { shell, ring, B.L. (12-in., 10-in., 9·2-in., and 8-in.) { band { broad { high / low	1 per work.	For shells with broad driving bands only
Gauges { shell, ring, B.L. (12-in., 10-in., 9·2-in., and 8-in.) { band { narrow { high / low	1 per work.	For shells with narrow driving bands only.§
Gauges { shell, ring, B.L. (12-in., 10-in., 9·2-in., and 8-in.) { body	1 per work.	
Planks, stacking projectiles, heavy	1 per work	For rolling projectiles.
Plugs, fuze-hole, G.S., without loop	1 per shell.	
Protectors, armour-piercing projectiles, B.L.	1 per armour-piercing shot	To protect the point of the shot. 57 Malta 8336
Shell, B.L., filled‖	... ...	*See* end of table.
Shot, B.L.	... ...	*See* end of table.

* The present supply of ½ charges for the 8-in. Mark VII gun will first be used up.

† The designation number is shown on the label of the cylinder or other package in which the fuze is packed. The number stamped on the fuze itself denotes the number of the thousand manufactured.

‡ After use the tubes will be returned to store and forwarded to Woolwich as old metal.

§ The gauges for narrow bands are only required when any of the following projectiles are on charge:—8-in., Mark I; 9·2-in., Mark I; Palliser shot, Mark II; and 12-in., Mark I.

‖ Supplied with fuze-hole plugs, which, however, are separately shown, and are to be separately charged and accounted for.

Digitized by Google

Equipment of B.L. 12-in., 10-in., 9·2-in., and 8-in. Guns—*continued.*

	TABLE 1—*continued.*	Proportions.	Remarks.
	Woolwich Store Charge, No. 25.		
57 St. Lucia 310	**Brushes,** flue, 5-ft. 6-in.	1 per work of 10 guns or less number of guns	For cleaning recoil cylinders of disappearing carriage.
	Lamps, fighting*	2 per gun.	
	Measures, glass, 4-oz.	1 per work of only 1 disappearing carriage, or 2 per work of more than 1 disappearing carriage.	For measuring caustic soda solution.
	Woolwich Store Charge, No 27.		
	Flags, red, 12 feet × 6 feet	1 per practice battery ...	*See* paragraph 107.
	Woolwich Store Charge, No. 28.		
	Cable, firing, electric, twin† ...	30 yards per gun ...	For firing guns electrically.
	Lamp, electric, telescope	1 per position-finder or depression range-finder where the electric search light is installed.	
	Lamps, electric, telescope — battery, Le Clanche, 4 cell‡	1 per lamp.	
	Lamps, electric, telescope — leads, flexible double strand, 2½ yds. (a)‡	1 ,, ,,	
	Lamps, electric, telescope — switch and resistance coil‡	1 ,, ,,	
	Lamps, electric, telescope — wires, connecting, "C. 5," 6 yards‡	1 ,, ,,	
57 Gibraltar 5740	**Position-finders** { depression ... horizontal ...	As authorised. As authorised.	For coast batteries with site too low to allow the use of a depression instrument. *See* paras. 108–114.
57	*Woolwich Store Charge, No.* 29.		
Cork 4063	**Clinometers,** large§	1 per 3 guns, or 1 per work.	For giving quadrant elevation and measuring vertical angles.
	Hydro-clinometers	1 per gun on barbette carriage.	
	Indicators, range	As authorised	For coast batteries.
	Range-finders, depression... ...	As authorised	*See* pages 208 to 227 App. III
57	**Stands,** telescope, 2½-in. socket ...	1 per work	For use with telescope.
Ports.	**Tapes,** measuring, 50 ft.	1 per sub-district ...	For measuring cordage, &c.
2800 73 3 6691	**Telescopes,** 3 ft.	1 per work	For general use.

* Oil and wick for these are supplied by Army Service Corps as required.
† D. 5 wire will be issued as required for renewal of standing wires on the carriages.
‡ These would not require to be exchanged in the event of a lamp being damaged.
§ Stations having "Clinometer, Watkin," will retain them in use until they become unserviceable, when they will be replaced by the "Clinometer, large."

57
Gibraltar
5740

Digitized by Google

Equipment of B.L. 12-in., 10-in., 9·2-in., and 8-in. Guns—*continued.*

The proportions of projectiles herein laid down will be maintained for the total number of guns of each nature in a district, but the number of each description of projectile for individual guns will be decided by the general officer commanding the district according to the relative importance of the position of such gun, and the purpose for which its fire would most probably be required in the event of an attack, provided that the total, viz., 100 rounds per gun at home and 200 rounds abroad is adhered to.

TABLE I—*continued.*

		Class I. Guns supported by auxiliary fire, or by guns of smaller calibre bearing on the same field.		Class II. Guns unsupported (or practically unsupported) by auxiliary fire.	Special Proportions.			Remarks.
		B.L.			Spithead Forts.	Malta and Gibraltar.	Sierra Leone.	
		9·2-inch and upwards.	8-inch.*	B.L. 8-inch.*	B.L. 12-inch.	B.L. 10-inch and 9·2-inch.	B.L. 9·2 inch.	
Shells, B.L.	common	50	70	50	45	50	45	Per 100 rounds.
	Shrapnel	—	—	20	—	—	15	
Shot, B.L.	Armour-piercing	—	—	—	—	10	—	
	Case	—	—	—	5	—	—	
	Palliser	50	30	30	50	40	40	

* A proportion of segment shells has been supplied with the 8-in. Mark VII gun, but no more will be issued, and the proportions will in future be as shown above.

57
Gen. No.
5224
(EQ. R.)

Digitized by Google

EQUIPMENT OF B.L. 6-INCH, 5-INCH, AND 4-INCH GUNS, FOR PERMANENT WORKS.

TABLE 2.	Proportions.	Remarks.
Woolwich Store Charge, No. 2.		
Bags, sand, common*	1 per gun on disappearing carriage.	To place in front of muzzle of gun when firing electric tubes, to dry the vent before commencing practice (*see* para. 189).
Bars, crow, 6 feet	1 per work	For general use.
Lamps, tracing†	2 per 6-in. gun	For night firing.
	1 per 5-in. and 4-in guns	
Woolwich Store Charge, No. 4.		
Carts, trench	1 per sub-district ...	For moving projectiles.
Drugs, gun, 5 ton	1 per district	For ordnance up to 5 tons.
Woolwich Store Charge, No. 5.		
Brushes, water, carriage ...	2 per gun	For cleaning projectiles, &c.
Woolwich Store Charge, No. 7.		
Chests, tool, filled — No. 3 D	As specially authorised. *See* paragraph 201.	For repair of carriages and slides.
Chests, tool, filled — No. 11 A... ...	1 per work ...	For repair of carriages and slides.
Boards, range	1 per two 6-in. guns of same mark, or where mounted singly, 1 per gun.	To be provided locally.‡
Cans, oil, lubricating, G.S.§ ...	1 per gun	For use of armament artificers.
Drivers, screw, G.S., 24-inch ...	1 per gun	For general use.
Hammers, claw, 28 oz.... ...	2 per battery	For general use.
Woolwich Store Charge, No. 8.		
Spanners, armament artificers, double-ended — 1½in. and 1⅝-in.	1 set per work...	For adjusting and tightening up bolts and nuts. For 6-inch guns only.
Spanners, armament artificers, double-ended — 1¼ ,, ,, 1⅜ ,,	1 set per work...	For adjusting and tightening up bolts and nuts. For 6-inch guns only.
Spanners, armament artificers, double-ended — 1 ,, ,, ⅞ ,,	1 set per work...	For adjusting and tightening up bolts and nuts. For 6-inch guns only.
Spanners, armament artificers, double-ended — ¾ ,, ,, ⅝ ,,	1 set per work...	For adjusting and tightening up bolts and nuts. For 6-inch guns only.
Spanners, armament artificers, double-ended — ½ ,, ,, ⅜ ,,	1 set per work...	For adjusting and tightening up bolts and nuts. For 6-inch guns only.
Spanners, McMahon, 15-inch...	1 per gun	For tightening nuts, &c.
Wrenches, knock up, G.S. ...	1 per work	For general purposes.
TOOLS, ORDNANCE.		
Tools, examining, painting and lacquering rifled ordnance, sets.	1 per district	For detail of tools, *see* Table A, pages 140 to 145.

* To be filled locally with sand or earth.

† Oil and wick for these are supplied by Army Service Corps, as required.

‡ The fuze scale is either painted on the board, or printed on paper and attached to the board.

§ When these cans become unserviceable, they will be replaced by "Can, lubricating, No. 9."

Digitized by Google

Equipment of B.L. 6-in., 5-in., and 4-in. Guns, for Permanent Works—*continued.*

TABLE 2—*continued.*	Proportions.	Remarks.	
Woolwich Store Charge, No. 10.			
Filters, hydraulic jack	1 per work	For filling jacks, &c.	
Frames, store, hydraulic jack	1 per work or per 4 jacks.	For keeping jacks under pressure.	
Jacks, hydraulic, G.S., 10 tons	1 per work, 6-inch only	For general purposes.	
lifting screw, Clerk's	2 per work	For 4 and 5-inch B.L. guns	57
Pad, frame, store hydraulic jack	1 per hydraulic lifting jack		Gen. No.
Plates, wheel, platform, siege, sets	1 per double-decked platform		6433
Woolwich Store Charge, No. 11.			
Chalk, white ... ... lbs.	2 per gun.	Annual supply.	
Glycerine ... ... ,,	1 per gauge pressure dead weight testing.	For lubricating gauge.	
Methylated spirits ...galls.	As required	For H.P. cylinders.	22407
Oil, mineral ... ... ,,	As required	For H.P. cylinders and hydraulic buffers.	Vocab
Soda, carbonate, dry ... lbs.	As required	For H.P. cylinders.	3178
Solution, caustic soda, 1 pint bottles	As required	For reservoirs, air.	71
			1
			3608
Woolwich Store Charge, No. 13.			
Forges, field, R.A., Mark IV	As authorised. *See* paragraph 201.	For use of armament artificers.	
Woolwich Store Charge, No. 14.			
Arms, radial, pivot, double-decked platform	1 per double-decked platform.		
Bands, elevating, removable ...	1 per gun	For guns with removable elevating bands.*	38407
Boxes, limber, travelling ...	1 per 5-inch and 4-inch limber.		Vocab.
Buckets, sponge, garrison ...	1 per gun	For general use.	2898
Carriages: garrison, B.L. barbette, 6-inch.	1 per gun according to description of mounting approved.	Marks I and III disappearing carriages for Mark V gun, and II and IV for Mark IV and VI guns.	
Carriages: garrison, B.L. disappearing, 6-inch, Marks I, II, III and IV.†			
Carriages: garrison, B.L. Vavasseur central pivot 6-inch.			
Carriages: travelling, B.L. 5-inch, 6-ft. parapet		For component and spare parts *see* pages 476 to 519.	§ 7555
Carriages: travelling, B.L. 4-inch, 6-ft. parapet			
Connections, indicator pressure	1 per 6-inch disappearing carriage.	For connecting indicator to recoil cylinder.	57
			D'port
			5473

* Elevating bands of the earlier issues of 6-inch B.L. guns are fixtures, and as such are a component of the gun and not accounted for as a separate store. Bands issued separately from the gun should, when placed in position, be secured as directed in para. 6338, "List of Changes in War Matériel."

† For ingredients of liquid and quantities thereof, *see* paragraphs 460 and 567.

38407
Equip
1631

Digitized by Google

Equipment of B.L. 6-in., 5 in., and 4-in. Guns, for Permanent Works—*continued.*

	TABLE 2—*continued.*	Proportions.	Remarks.
	Woolwich Store Charge, No. 14—continued.		
57 Gen. No. 5056	**Covers** { carriage, garrison, disappearing, and gun, B.L.	1 per 6-inch gun on disappearing carriage.	
	gear, firing, { No. 1	1 per 6-inch gun on barbette carriage.	
	electric { No. 2	1 per 6-inch gun on disappearing carriage.	
57 D'port. 5199	**Drivers,** screw, No. 1	2 per double-decked platform.	For use when laying double-decked platforms.
	Gauges, pressure, dead weight testing, Mark II.	1 per sub-district	For disappearing carriages only.
	Gyns, triangle, with appurtenances, light, tubular Mark II.*	1 per sub-district, or 2 if more than 3 works.	For mounting and dismounting ordnance.
	Handspikes, { 7 feet common { 6 feet	2 per 6-inch gun 5 per 5-inch or 4-inch guns, on travelling carriage.	Not to exceed 12 per work.
	Holdalls, gun appurtenances, B.L. garrison carriages†	1 per 6-inch carriage.	
	Indicators, pressure, spring, Mark II.	1 per 6-inch disappearing carriage.	
	Limbers, siege	1 per 2 5-inch and 4-inch B.L. guns.	
	Measures, hydraulic buffer, filling	1 per work	For filling cylinders of disappearing carriages and hydraulic buffers.
	Planks, trail, siege	1 per double-decked platform.	
	Plates, pivot, double-decked platform	1 per double-decked platform	With under plates and bolts.
57 Gen. No. 2255	**Platforms,** siege, double-decked "C" pivot‡ **Pockets,** extractor, tube P, B.L. 5-inch travelling, 6-ft parapet.§	1 per 5-inch and 4-inch B.L. gun. 1 per 5-inch and 4-inch gun.	To hold "extractor tube P," and "rimer, vent, axial."
	Pumps, air, double, carriage, garrison, H.P.‖	1 per work of 3 or less disappearing carriages. 2 per work of more than 3 disappearing carriages.	

* Complete with one gyn tackle, 4 levers (2 of which with ropes), 3 wood trucks and 2 slings of 7-inch white rope. The gyn tackle consists of 18 fathoms of 4-inch white bolt rope with 2 treble 12-inch Bothway blocks. There are also required 4, heavy drag ropes (these will be supplied from the equipment of the work in which the gyn is required).

† The holdall is intended for use as a convenient receptacle for such of the gun appurtenances (such as the extractor and rimer) as are not in immediate use.

‡ To be kept in Army Ordnance store, or Royal Artillery charge for Army Ordnance Department, as best suits the requirements of each locality. To be demanded and laid for service by Royal Engineers, but for instructional purposes of the Royal Artillery may be drawn and laid by them.

§ Issued with the carriage.

‖ For list of spare parts, *see* page 676.

Digitized by Google

Equipment of B.L. 6-in., 5-in., and 4-in. Guns, for Permanent Works—*continued.*

TABLE 2—*continued.*	Proportions.	Remarks.	
Woolwich Store Charge, No. 14—continued.			
Reservoirs, compressed air* ...	1 per 6-inch disappearing carriage.		
Rollers, | No. 11†	1 per 5-inch gun.		57
shifting | No. 12†	1 per 4-inch gun.		Gen. No.
Separators, air pump	1 per air pump.	To separate the air from the water.	2255
Slides, L, B.L. 6-inch { barbette ... ... Vavasseur, central pivot	1 per gun, according to description of mounting approved.	For component and spare parts *see* pages 520 to 542.	
Spanners and special implements for mountings	... ...	*See* Appendix XI, pages 278 to 292.	38407
Swingletrees, No. 1	3 per 5-in. and 4-in. guns.		Equip. 1516
Wrenches, pivot	... ...	*See* Appendix XI, page 292.	
Woolwich Store Charge, No. 15.			
Barrows, powder	1 per work	For moving powder or filled cartridges.	
Boxes, grease, 3 lbs.	1 per 3 guns or less ...	For general purposes.	
Woolwich Store Charge, No. 16.			
Chests, tool, empty, re-coppering guns B.L. 6-inch, Mark V. (With tools shown at Appendix VIII, page 246).	As specially authorised. *See* paragraph 201	For guns with cup obturator.	
Spikes, gun, common	2 per gun.		
Woolwich Store Charge, No. 17.			
Box, spare parts, B.L. guns 6-inch	1 per 6-inch gun ...	For spare springs and other small spare parts of gun.	57 Vocab. 2898
Boxes, obturating pads... ...	1 per gun	To contain 3 pads and 3 sets of discs. For guns with obturating pad only.	
Ordnance, B.L.	As authorised	For component and spare parts, also special implements and appurtenances, *see* pages 454 to 465.	
Woolwich Store Charge, No. 18.			
Brushes, piasaba, B.L., bore ...	1 per 2 guns per work...	For cleaning the bore.	71 1
Canvas, packing, Hessian, 47-inch ... ... yards	2½ per gun	Annual allowance. For use with pessaba brush for cleaning bores.	4504 4852
Cases, cartridge, No. 25 ...	2 per 5-inch and 4-inch guns.	For bringing up cartridges.	71 1 4504

* To be kept in Artillery store when not in use.
† Issued with the carriage.

Digitized by Google

Equipment of B.L. 6-in., 5-in., and 4-in. Guns for Permanent Works—*continued.*

TABLE 2—*continued.*	Proportions.	Remarks.
Woolwich Store Charge, No. 18—continued.		
71 **Covers** { breech, B.L.	1 per gun.	
Covers { muzzle, B.L.	1 per 6-inch gun.	
1 **Keys,** tampeon, small	1 per 2 guns or less number, 6-inch only.	Securing tampeon in gun.
3927 **Rammers,** B.L. { 6-inch	1 per 6-inch gun, except disappearing carriages in circular pits.	
Rammers, B.L. { 5-inch	1 per 5-inch gun, also 6-inch on disappearing carriages in circular pits.	
Rammers, B.L. { 4-inch	1 per 4-inch gun.	
Ropes, drag, heavy ... pairs	2 per work.	
61030 **Scrapers,** ordnance, B.L. 6-inch to 13·5-inch	1 per 6-inch gun ...	For cleaning powder chambers.
426 **Staves,** end, B.L.	1 per piasaba brush.	
Stores, for moving and mounting	Depend on mounting.	
Tackles, gun, 3-inch white rope	2 per 2 or less disappearing carriages.	
38407 **Tampeons,** B.L. { L.S.* ...	1 per 6-inch gun.	
Equipment **Tampeons,** B.L. {	1 per 5-inch and 4-inch gun.	For the muzzle.
1450		
Woolwich Store Charge, No. 20.		
Bags, burster, B.L. { common†	1 per empty common shell.	
Bags, burster, B.L. { Shrapnel	1 per 5-inch and 4-inch forged steel shells.	
Bearers, cartridge cylinder‡ ...	2 per gun 6-inch B.L.	For carrying cylinders.
Cylinders, cartridge, B.L., 6-inch.	1 per full charge 6-inch	For cartridges.
Woolwich Store Charge, No. 21.		
Bags, primer, filled, 7 drams ...	3 per empty common shell.	
Cartridges, B.L. filled { 6-inch	4 (¼ charges) per projectile§	All the cartridges in Royal Artillery charge will be kept filled as far as store accommodation will admit. *See* paragraph 80.
Cartridges, B.L. filled { 5 ,, ...	2 (½ charges) per projectile.	
Cartridges, B.L. filled { 4 ,, ...	1 (full charge) per projectile.	
Gunpowder { rifle, pistol, R.F.G. or F.G. ... ... lb.	Sufficient to fill shells supplied empty.	
Gunpowder { shell { P. ... ,,		
Gunpowder { shell { F.G. ... ,,		

* Tampeon B.L. or Q.F. 6-inch will be issued when the existing stock of the Land Service pattern is used up.

71 1 5450 † Dowlas. The serge for cast-iron and forged steel shells, and silk cloth for cast steel shells, already supplied, will be first used up.

‡ These are only required when the cartridge stores are far from the guns.

§ Any ¼ charges of E.X.E. gunpowder already supplied will be first used up.

Digitized by Google

Equipment of B.L. 6-in., 5-in., and 4-in. Guns, for Permanent Works—*continued.*

TABLE 2—*continued.*

	Proportions.	Remarks.
Woolwich Store Charge, No. 22.		
Batteries and keys, test and firing	1 per 6-inch gun ...	For use with electric tubes.
Boxes, tube, vent - sealing, garrison	1 per gun	To be hung up in the emplacements as a receptacle for one tin box of 5 tubes.
Fuzes * — percussion — direct action, No. 3	1 per 6-inch and 5-inch common shell.	Mark III. for sea fronts, and Marks I.* and II. for land fronts.
Fuzes * — percussion — small, No. 8 ...	1 per 4-inch common shell.	
Fuzes * — time, sensitive, middle, No. 24	1 per 6-inch and 5-inch Shrapnel shell.	
Fuzes * — time and percussion — middle, No. 54	20 per cent. for 4-inch Shrapnel shell, in addition to the number of short No. 55.	For use at long range.
Fuzes * — time and percussion — short, No. 55 ...	1 per 4-inch Shrapnel shell.	
Implements, fuze and shell, Keys, fuze, universal	1 per gun, 4 inch. 2 per gun, 6-inch and 5-inch.	The second key is required for Mark III. D.A. fuze.
Lanyards — cocking	1 per gun	For guns with percussion locks.
Lanyards — friction tube — garrison — No. 2 ...	3 per 6-inch gun on disappearing carriages.	
Lanyards — friction tube — garrison — No. 3 ...	3 per 6-inch gun not on disappearing carriages.	
Lanyards — friction tube — siege, No. 2 ...	3 per 5-inch and 4-inch B.L. guns.	
Primers, Shrapnel shell ...	1 per empty Shrapnel shell, except 5-inch and 4-inch forged steel shells.	Issued in cylinders containing 10.
Tubes, vent sealing† — electric, P.	1 per round, 6-inch B.L. guns only.	
Tubes, vent sealing† — percussion	1 per round.	
Woolwich Store Charge, No. 24.		
Gauges, shell, ring. B.L. 6-in., 5-in., and 4-in. — band — broad — high	1 per work	For shells with broad driving band only.
Gauges, shell, ring. B.L. 6-in., 5-in., and 4-in. — band — broad — low		
Gauges, shell, ring. B.L. 6-in., 5-in., and 4-in. — band — narrow — high	1 per work	For shells with narrow driving band only.‡
Gauges, shell, ring. B.L. 6-in., 5-in., and 4-in. — band — narrow — low		
Gauges, shell, ring. B.L. 6-in., 5-in., and 4-in. — body	1 per work.	

61030
2426

* The designation number is shown on the label of the cylinder or other package in which the fuze is packed. The number stamped on the fuze itself denotes the number of the thousand manufactured.

† After use the tubes will be returned to store, and forwarded to Woolwich as old metal.

‡ The gauges for narrow bands are only required for the following projectiles:—6-inch common, Marks I. and II.; Shrapnel, Mark I.; Palliser shot, Marks I., II., and III.; 5-inch common, Marks I. and II.; 4-inch common and Shrapnel, Marks I. and II.

75
12
4607

Digitized by Google

Equipment of B.L. 6-in., 5-in., and 4-in. Guns, for Permanent Works—*continued.*

TABLE 2—*continued.*	Proportions.	Remarks.
Woolwich Store Charge, No. 24—continued.		
Planks, stacking projectiles, light	1 per work for 6-inch only.	For rolling projectiles.
Plugs, fuze hole, G.S., without loop	1 per shell.	
57 Malta 8336 **Protectors,** armour-piercing projectile, B.L.	1 per 6-inch armour-piercing shot.	To protect the point of the shot.

		Land fronts.	Sea fronts.	
Shells, B.L. filled*†	common ... 6-inch...	45	50	per 100 rounds.
	common ... 5 ,, ...	45	45	
	common ... 4 ,, ...			
	Shrapnel ... 6-inch...	45	30	
	Shrapnel ... 5 ,, ...	45	45	
	Shrapnel ... 4 ,, ...			
Shot, B.L.†	case 6-inch...	10	—	
	case 5 ,,	10	10	
	case 4 ,,			
	Palliser 6 ,, ...	..	20‡	
	Palliser 5 ,,	—	—	
	Palliser 4 ,,			

Woolwich Store Charge, No. 25.		
57 St. Lucia 310 **Brushes,** flues, 5 feet 6 inches	1 per work of 10 guns or less number of guns.	For cleaning recoil cylinders of disappearing carriages.
Lamps, fighting§	2 per 6-inch gun	
Measures, glass, 4 oz.	1 per work of only 1 disappearing carriage, or 2 per work of more than 1 disappearing carriage.	For measuring caustic soda solution.
Woolwich Store Charge, No. 27.		
Flags, red, 12 ft. × 6 ft. ...	1 per practice battery...	*See* paragraph 107.
Woolwich Store Charge, No. 28.		
Cable, firing, electric, twin‖ ...	30 yards per gun ...	For firing guns electrically.
Lamp, electric, telescope ...	1 per position-finder or depression range-finder, where the electric search light is installed.	

* Supplied with fuze hole plugs, which, however, are separately shown, and are to be separately charged and accounted for.

57 Gen. No. 5224 † The proportions of projectiles here laid down for 6-inch guns will be maintained for the total number of guns in a district, and will be subject to the same conditions as laid down on page 303 for the heavier natures of B.L. guns.

‡ The proportions for Malta and Gibraltar will be—armour-piercing 10, and Palliser 10.

57 Gibraltar 5740 § Oil and wick for these are supplied by Army Service Corps, as required.

‖ D. 5 wire will be issued as required for renewal of standing wires on the carriages.

Digitized by Google

Equipment of B.L. 6-in., 5-in., and 4-in. Guns, for Permanent Works—*continued.*

TABLE 2—*continued.*	Proportions.	Remarks.
Woolwich Store Charge, No. 28—continued.		
Lamps, electric, telescope { battery, Le Clanche, 4 cell*	1 per lamp.	
leads, flexible double strand, 2½ yds (a)*	1 ,,	
switch and resistance coil*	1 ,,	
wires, connecting, "C. 5," 6 yds.*	1 ,,	
Position-finders { depression	As authorised.	
horizontal	As authorised	For coast batteries, with site too low to allow the use of a depression instrument. *See* paras. 108–114.
Woolwich Store Charge, No. 29.		
Clinometers, large†	1 per 3 guns or 1 per work.	For giving quadrant elevation and measuring vertical angles.
Hydro-clinometers	1 per 6-in. gun on barbette and V.C.P. carriages.	
Indicators, range	As authorised	For coast batteries
Range finders, depression ...	As authorised	*See* App. III., pp. 208 to 227.
Stands, telescope, 2½-inch socket	1 per work	For use with telescopes.
Tapes, measuring, 50 feet ...	1 per sub-district ...	For measuring cordage, &c.
Telescopes, 3-feet	1 per work	For general use.

57 Cork 4063 38107 Equipment 1476 57 Ports. 2800

* These would not require to be exchanged in the event of a lamp being damaged.
† Stations having "Clinometer, Watkin," will retain them in use until they become unserviceable, when they will be replaced by the "Clinometer, large."

EQUIPMENT OF R.M.L. 17·72-INCH AND 16-INCH GUNS.

TABLE 3.	Proportions.	Remarks.
Weedon Store Charge.		
Anvils, ¼ cwt.	1 per station, 16-inch guns only	For repairing purposes.
Woolwich Store Charge, No. 2.		
Lamp, tracing*	2 per gun...	For night firing.

57 Gibraltar 5432

* Oil and wick for these are supplied by Army Service Corps, as required.

Digitized by Google

Equipment of R.M.L. 17·72-in. and 16-in. Guns—*continued.*

TABLE 3—*continued.*	Proportions.	Remarks.
Woolwich Store Charge, No. 2—contd.		
	Gibraltar.	
Lanterns, tent, folding* ...	3 per work for 17·72-inch	For passages.
	2 ,, ,, ...	For moving about as required.
	Malta.	
	5 per work for 17·72-inch	For engine room.
	3 ,, ,, ...	For pump room.
	2 ,, ,, ...	For machine room.
	3 ,, ,, ...	For passages.
	2 ,, ,, ...	For moving about as required.
	Dover.	
	3 per work 16-inch ...	For passages.
Axes, felling, straight helve	1 per station, 16-inch gun only	For repairing woodwork.
Bars, crow, 6 ft.	1 per work	For general use.
Woolwich Store Charge, No. 5.		
Brushes, water, carriage	2 per gun	For cleaning projectiles.
Woolwich Store Charge, No. 7.		
Chests, tool, filled No. 11 A	1 per station ...	For use of persons in charge of machinery.
No. 12 A	1 ,, ,, ...	
No. 13 A	1 ,, ,, ...	
Boards, range	1 per gun, 17·72-inch, and 1 per 2 guns 16-inch.	To be provided locally.†
Bolts, swivel, steel, double thread, ½-in. diam.	3 per 16-inch gun only...	For lowering shell into shell tube.
Cans, oil, lubricating, G.S.‡	6 per work	For use of persons in charge of machinery.
Grindstones, 24-inch	1 for 16-inch gun only ...	For sharpening tools.
Hammers claw, 28-oz.	2 per work	For general use.
fitters, 48-oz., copper ...	1 per 16-inch gun ...	For general use with machinery where a steel hammer would be unsuitable.
Woolwich Store Charge, No. 8.		
Knives, magazine	1 per 17·72-inch gun only	For removing tape band from cylinders.
Saws, ripping	1 per 16-inch gun only ...	For general use.
Spanners. Armament 1½-in. and 1⅝-in. ...	1 set per work ...	For adjusting and tightening up bolts and nuts.
Artificers, 1¼ ,, ,, 1⅜ ,, ...		
double ended 1 ,, ,, 1⅛ ,, ...		
¾ ,, ,, ⅞ ,, ...		
½ ,, ,, ⅝ ,, ...		
McMahon, 15-inch	1 per station	For use of persons in charge of machinery.
Vices, standing, 80 lbs.§	1 per work.	
Wrenches, knock up, G.S.	2 per work	For general use.

* Candles for these are supplied by Army Service Corps, as required.

† The fuze scale is either painted on the board, or printed on paper and attached to the board.

‡ When these cans become unserviceable they will be replaced by "Can, lubricating, No. 9."

§ Supplied by R.E. Department.

Digitized by Google

Equipment of R.M.L. 17·72-in. and 16-in. Guns—*continued.*

TABLE 3—*continued.*	Proportions.	Remarks.
Woolwich Store Charge, No. 8—contd.		
TOOLS, ORDNANCE.		
Tools. examining, painting, and lacquering rifled ordnance sets	1 per station	For detail of tools *see* Table A, pages 140 to 145.
TOOLS, SPECIAL.		
1 set of cup-leather moulds*	Per station for 17·72-inch guns only	For use of persons in charge of machinery.
1 set of taps for air cocks		
4 screwing tools, 1½ in., 1 in., ¾ in., ½ in. (one to each size)		
1 expanding tool, 1⅜ in.		
5 tools for leather washers, 1⅜ in., 1⅛ in., 1 in., ¾ in., ½ in. (one to each size)		
1 set of spanners, special (10 in all) ...		
1 ,, ,, for recoil press (5 in all)		
1 ,, pipe spanners, steel (9 in all)...		
Woolwich Store Charge, No. 10.		
Filters, hydraulic jack	1 per gun	For filling jacks.
Frames, store, hydraulic jack ...	1 per work	For keeping jacks under pressure.
Jacks, lifting, hydraulic { G.S., 30 tons... ...	1 per work	For general purposes.
{ Tangye's, 7½ tons ...	1 per work, for 16-inch guns	For general purposes.
Pad, frame, store hydraulic jack...	1 per hydraulic lifting jack	
Taps, double thread, ½ inch diameter (2 to a set)	1 set per work, for 16-inch only	For rectifying threads of hole in base plug of shells for swivel bolts.
Woolwich Store Charge, No. 11.		
Chalk, white ... ... lbs.	2 per gun...	Annual supply.
Woolwich Store Charge, No. 13.		
Forges, field, R.A., Mark IV	As authorised. *See* paragraph 201.	
Woolwich Store Charge, No. 14.		
Buckets, sponge, garrison	4 per gun	For general use.
Carriages, garrison, R.M.L. { 17·72-inch ...	1 per 17·72-inch gun ...	Sliding.
{ 16-inch ...	1 per 16-inch gun ...	Turret.
Handspikes, common, 7 feet ...	2 per gun.	
Levers { hand, bolt, retaining projectile	2 per work for 16-inch gun only	For projectile trolley.
{ iron-shod, crow, 7 feet ...	1 per gun...	For drawing bolts, &c.
Loops, withdrawing projectiles ...	3 per 16-inch gun.	
Measures, hydraulic buffer, filling...	1 per work	For filling the cylinder of hydraulic buffer.

57
Gen. No.
6433
57
Dover
2391

* To be turned in hard wood by local artificers.

Digitized by Google

Equipment of R.M.L. 17·72-in. and 16-in. Guns—*continued.*

TABLE 3—*continued.*	Proportions.	Remarks.
Woolwich Store Charge, No. 14—contd		
Slides, L., R.M.L. 17·72-inch ...	1 per gun	With hydraulic travers ing and loading gear.
Slides, L., R.M.L. 16-inch ...	1 per gun	Turret, left and right.
57 Dover 3099 **Trolleys** loading, R.M.L. 17·72-inch	4 per work	2 per loading chamber.
Trolleys loading, R.M.L. 16-inch projectile	2 ,, ,, ...	1 ,, ,, ,,
Trolleys shell, R.M.L. 17·72-inch ...	1 per 17·72-inch gun ...	For moving shells.
53 Gibraltar 5390 *Woolwich Store Charge, No.* 16.		
Covers, sights and shutter, R.M.L. 17·72-inch gun	1 set per 17·72-inch gun	For protection of sight and shutters.
Woolwich Store Charge, No. 17.		
Bits, vent, 36-inch	1 per gun	For removing irregularities in axial vents.
Cradles, vent 17·72-inch	1 per battery and 1 spare per district	For removing and fixing vent.
Cradles, vent 16-inch	1 per turret and 1 spare per district	For removing and fixing vent.
Drifts, vent, 36-inch	1 per gun	For drifting axial vents.
Extractors, tube V.M.	1 per gun	For use in case of failure of extractor in vent head.
Extractors, tube F., special ...	1 per 2 guns per work ...	For extracting jammed vent-sealing tubes.
Ordnance, R.M.L. 17·72-inch 16-inch	As authorised ...	For Fittings, Special Implements, and Sights, *see* pages 318 and 319, and for Spare parts, *see* Handbooks.
Rimers, vent, axial	1 per gun	For rectifying axial vents.
Rods test, loading, R.M.L. 17·72-inch	1 per 17·72-inch gun ...	To ascertain if the shell has shifted in the bore after loading at practice.
Rods vent, 36-inch	2 per gun	For cleaning the vent.
Woolwich Store Charge, No. 18.		
Bags, extractor, projectile	1 per extractor	To protect the head of the extractor.
Brushes, piasaba, R.M.L. 17·72-in.* ...	1 per 17·72-inch gun	For cleaning out the grooves.
Brushes, piasaba, R.M.L. 16-inch	1 per 16-inch gun	For cleaning out the grooves.
Caps, sponge, No. 15†	1 per sponge where necessary	To protect sponge head.
Cordage, hawser, 3-strand, tarred, 3½-inch	20 fathoms, for 16-inch gun only	For suspending stage used in cleaning boiler.
Extractors projectile, R.M.L. 17·72-in. 16-in.	1 per work.	

71 1 5408

* Also rammer (the brush and rammer are combined in one).

† Only to be used for sponges in transit, or where stores are damp.

Digitized by Google

Equipment of R.M.L. 17·72-in. and 16-in. Guns—*continued.*

TABLE 3—*continued.*	Proportions.	Remarks.
Woolwich Store Charge, No. 18—continued.		
Rammers { cartridge, tube... ...	1 per 16-inch gun only ...	For pushing ¼ charge into cartridge tube.
wad, shell tube ...	1 ,, ,,	For inserting wad into shell tube.
R.M.L. 16-inch ...	1 per work, for 16-inch gun only	For use in the event of the steam gear getting out of order.
Ropes, { drag, heavy	2 per work for 16-inch gun only	
guide, rammer, R.M.L. 16-in.	2 per work, for 16-inch gun only	For use in the event of the steam gear getting out of order.
Selvagees, ordinary 4 ft. 6 in. long...	2 per work for 16-inch guns only	For lifting machinery for repairs and cleaning.
Selvagees, projectile, R.M.L., 16-in.	2 per 16-in. gun... ...	For lifting projectiles.
Sponges, R.M.L. 16-inch	1 per work, for 16-inch gun only	For use in the event of the steam gear getting out of order.
Stores for moving and mounting ...	1 set per station for 17·72-inch gun	Special, to be kept in Ordnance Store charge.
Tackles, loading, derrick, 12·5 inch	1 per 16-inch gun ...	For hauling shells out of loading tubes.
Tampeons	1 per gun	For the muzzle to protect the bore.
Wadhook, R.M.L. 16-inch	1 per work for 16-in. gun	
Woolwich Store Charge, No. 19.		
Scotches, medium	As required	For scotching up ends of piles of projectiles.
Skids { 6 ft. × 12 in. square... ...	1 per 17·72-inch gun	For retaining gun in position when run back.
1 ft. 2 in. × 12 in. square ...	1 ,, ,, ,,	
10 in. × 12 in. square ...	1 ,, ,, ,,	
Woolwich Store Charge, No. 20.		
Bags, burster, R.M.L., common { 17·72-inch	1 per 17·72-inch empty shell.	
16-inch ..	1 per 16-inch empty shell	
Bearers, cartridge cylinder, Mark III.	3 per 16-inch gun.	
Cases, powder, cylindrical, Z ...	2 per 17·72-inch projectile (each to hold 2 quarter charges).	
,, ,, ,, Levers...	3 per 17·72-inch gun ...	For opening cylindrical cases.
Cylinders, cartridge, R.M.L. 17·72-inch, 112½ lb. prism	4 per 16-inch projectile (each to hold 1 quarter charge).	
Woolwich Store Charge, No. 21.		
Bags, primer, filled { 10-oz.	1 per 17·72-inch empty common shell.	
7 drams ...	3 per 16-inch empty common shell.	

73
3
2691
73
3
2691

Digitized by Google

Equipment of R.M.L. 17·72-in. and 16-in. Guns—*continued.*

TABLE 3—*continued.*	Proportions.	Remarks.
Woolwich Store Charge, No. 21—continued.		
Cartridges, R.M.L., filled, cloth — 17·72-inch, 112½ lb. prism[1] black *or* prism[2]	Quarter charge, 4 per Palliser shot or steel common shell. 3 per cast-iron common shell	All the cartridges in Royal Artillery charge will be kept filled as far as store accommodation will admit, *see* para. 80.
16-inch, 112½ lb. prism[1] brown...	Quarter charge, 4 per projectile	
Gunpowder, shell, P. and F.G. ...	Sufficient to fill shells supplied empty	As at present arranged shells will be supplied filled.
Woolwich Store Charge, No. 22.		
Batteries and keys, test and firing*	2 per gun	For use with electric tubes.
Boxes, tube, vent-sealing, garrison...	1 per gun	To hold vent-sealing tubes.
Fuzes,† direct action, No. 3, Mark III	1 per common shell ...	Issued in tin cylinders containing 5 each.
Implements, fuze and shell — Keys, fuze, universal‡	1 per gun	
Scrapers, shell ...	2 per gun.	
Lanyards, friction tube, garrison — No. 1	3 per 16-inch gun	Without toggle.
,, 4	3 per 17·72-inch gun	
Tubes, vent-sealing§ — electric, V	1 per round.	
friction, V	1 per round	
Woolwich Store Charge, No. 24.		
Gas-checks, R.M.L. — 17·72-inch ...	1 per 17·72-inch projectile	For giving rotation to the projectile.
16-inch ...	1 per 16-inch projectile...	
Gauges, shell, ring, R.M.L., body and gas-checks — 17·72-inch ...	1 per work for 17·72-inch gun.	
16-inch ...	1 per work for 16-inch gun.	
Grummets, projectile, R.M.L. — 17·72-inch	1 per 17·72-inch cast iron projectile	For protecting base of projectile.
16-inch	1 per 16-inch cast iron projectile	
75 / 12 / 4575 **Levers,** grummet	2 per gun...	For removing grummets from base of cast iron projectiles.‖
Planks, stacking, projectile, heavy	2 per work	For rolling projectiles on.
Plugs, fuze-hole, G.S., without loop	1 per shell	For preserving fuze-holes.
Screws, preserving, eyebolt hole, large	As required	For projectiles having the hole eyebolt lifting.

* Will only be supplied as batteries, Le Clanché firing, 3 cell, and batteries, Menotit, test, become unserviceable.

† The designation number is shown on the label of the cylinder or other package in which the fuze is packed. The number stamped on the fuze itself denotes the number of the thousand manufactured.

‡ Will only be supplied as the "Keys, fuze, and plug, G.S." become unserviceable.

§ After being fired the tubes will be returned to store and forwarded to Woolwich as old metal.

‖ Also for extracting eyebolts from projectiles when existing stock of levers extracting eyebolt (page 449) is used up.

Digitized by Google

Equipment of R.M.L. 17·72-in. and 16-in. Guns—*continued.*

TABLE 3—*continued.*	Proportions.	Remarks.
Woolwich Store Charge, No. 24—continued.		
Shells, R.M.L. filled, common*† ...	50 per gun.	
Shot, R.M.L., Palliser	50 per gun	
Stamps, steel, W	1 per work	For stamping base plugs of Palliser shot, formerly termed shell, when weighted up with sand.
Tools, fixing gas-checks, R.M.L. 17·72-inch	2 per 17·72 inch gun	
Wads { 17·72-inch	1 per round	For retaining projectile in place after gun is loaded.
Wads { 16-inch	1 ,, ,, ...	For retaining projectile in place after gun is loaded.
Woolwich Store Charge, No. 25.		
Cans, oil, feeding, 1-pint	1 per work	For feeding lanterns.
Lamps, magazine passage‡ ...	*Gibraltar.*	
	2 per work, 17·72-inch ...	For engine room.
	2 ,, ,, ...	For pump room.
	1 ,, ,, ...	For machine room.
	1 ,, ,, ...	For traversing recess.
	Malta.	
	1 per work, 17·72-inch...	For pump room, for artificers' use.
Lamps, fighting¶	*Gibraltar.*	
	4 per gun, 17·72-inch ...	For gun emplacements.
	Malta.	
	4 per gun, 17·72-inch ...	For gun emplacements.
	2 ,, ,, ...	For traversing recess.
	2 ,, ,, ...	For loading port.
	Dover.§	
	4 per gun, 16-inch ..	For gun emplacements.
Scissors, lamp ... ... pairs	1 per work.	Trimming wicks.
Woolwich Store Charge, No. 26.		
Ladders, standing, 33-feet	1 for 16-inch gun only ...	For cleaning boiler flue.
Woolwich Store Charge, No. 28.		
Cable, firing, electric, twin‖	30 yards per gun ...	For electric firing leads
Galvanometers, detector, 3-coil ...	2 per work for 16-inch gun	For testing electric firing gear.
Lamps, electric, telescope	1 per position-finder or depression range-finder where the electric search light is installed.	

57
Malta
9345

57
Malta
8955
57
Gibraltar
5740
73
3
6691

* Supplied with fuze-hole plugs, which, however, are separately shown, and are to be separately charged and accounted for.

† The existing equipment of cast-iron common shells in the case of the 17·72-inch will only be fired with ¾ charge.

‡ Candles for these are supplied by Army Service Corps, as required.

§ At Dover turret these are for service in action only when electric light is not in use.

‖ D 5 wire will be issued as required for renewal of standing wires on carriages.

¶ Oil and wick for these are supplied by Army Service Corps, as required.

Digitized by Google

Equipment of R.M.L. 17·72-in. and 16-in. Guns—*continued.*

TABLE 3—*continued.*	Proportions.	Remarks.
Woolwich Store Charge, No. 28—continued.		
57 Gibraltar 5740 **Lamps,** electric, telescope: battery Le Clanché 4 cell*	1 per lamp	
leads, flexible, double strand, 2½ yards (a)*	1 ,,	
switch and resistance coil*	1 ,,	
wires, connecting "C.5," 6 yards*	1 ,,	
Lathes, engineers	1 per station	For use of persons in charge of machinery.
Position finders, depression ...	As authorised.	
57 Cork 4063 *Woolwich Store Charge, No.* 29. **Clinometers,** large†	1 per work	For giving quadrant elevation, and measuring vertical angles.
Hydro-Clinometers	1 per gun	
57 **Indicators,** range	As authorised	For coast batteries.
H. K. 8744 **Instruments,** time of flight ...	2 per work	For use at practice.
73 **Range-finders,** depression	1 per work	Where suitable site can be obtained.
3 **Stands,** telescope, 2½-inch socket ...	1 per work	For use with telescope.
6691 **Telescopes,** 3 feet	1 per work	For general use.

38407 Equip. 1476

* These would not require to be exchanged in the event of a lamp being damaged.

† Stations having "Clinometers, Watkin" will retain them in use until they become unserviceable, when they will be replaced by the "Clinometer, large."

Fittings, Special Implements, and Sights for 17·72-inch and 16-inch R.M.L. Guns.

	17·72-inch.	16-inch.	Remarks.
FITTINGS.			
Brackets, elevating	*a*1	*b*1	*a.* With four fixing screws. *b.* With 2 studs, 2 keep-pins, and 14 fixing screws.
Counterweights, muzzle (with 3 fixing screws)	1	—	To facilitate mounting or dismounting by balancing preponderance when the gun is suspended by the trunnions.
Holders, tube	3	3	Including 1 spare.
Plates, index, left *or* right (with 2 fixing screws, and reader with 2 fixing screws) ...	—	1	
Screws, bracket: elevating, preserving ...	4	14	
fore-sight, preserving ...	—	3	
inclined-plane, preserving ...	—	4	
latch, retaining, preserving ...	8	8	Also hinge plate.
link, connecting, preserving ...	12	—	
Screws, stud, trunnion, preserving ...	2	2	
Shutters*	1	1	
Studs, trunnion (with collar)	2	2	
Vents, axial	2	2	Including 1 spare

* Consisting of socket supporting vent, with fixing screws (6 for 17·72-inch and 4 for 16-inch); guide, tube-holder with 3 fixing screws hinge plate with 4 fixing screws, hinge bolt, and keep-pin; wheel lanyard-guide with pulley, axis pin, bolt with flat spring, chain, and eyebolt; guide pulley and axis pin; 2 retaining brackets for latches with 4 fixing screws; handle with 2 hinge pins and 2 retaining studs; 2 latches with 2 spiral springs, 2 directing studs for latches, and 1 electric and 1 friction firing plug.

Digitized by Google

Fittings, Special Implements, and Sights for 17·72-in. and 16-in. R.M.L. Guns—*continued*.

		17·72-inch.	16-inch.	Remarks.
	SPECIAL IMPLEMENTS.			
Wrenches	holder, tube	1	1	
	nuts, vent	1	1	
	plug, shutter	1	1	
	shutter	1	1	In two parts.
	stud, trunnion	1	1	
	stud, bracket, elevating	—	1	
	SIGHTS.			
Sights, R.M.L., reflecting — fore	17·72-inch left (with bracket and 2 fixing screws)	1	—	
	17·72-inch right (with bracket and 2 fixing screws)	1	—	
	16-inch, left *or* right (with bracket and 3 fixing screws)	—	1	
Sights, R.M.L., reflecting — hind	17·72-inch, lower left (with reflector, bracket, and fixing screws)	1	—	
	17·72-inch, lower right (with reflector, bracket, and fixing screws)	1	—	
	17·72-inch, upper left (tangent scale and sliding socket, pinion spindle and lever, hand-wheel, nut, and wheel index with pointer; guide brackets for sliding socket with fixing screws; carrier for upper reflector with mirror, pivot, and 2 keep-pins; directing bars for reflector, with hinge, bolt, washer, and keep-pins: bracket for connecting link with link, and 6 fixing screws; guide bar bracket, with rollers, spindles, and fixing screws)	1	—	
	17·72-inch, upper right (tangent scale and sliding socket, pinion spindle and lever, hand-wheel, nut, and wheel index with pointer; guide brackets for sliding socket with fixing screws; carrier for upper reflector with mirror, pivot, and 2 keep-pins; directing bars for reflector, with hinge, bolt, washer, and keep-pins: bracket for connecting link with link, and 6 fixing screws; guide bar bracket, with rollers, spindles, and fixing screws)	1	—	
	16-inch (with tangent scale, bar, and clamp bracket with reflector)	—	1	
	Mirrors, 17·72-inch, lower left	1	—	Spare.
	Mirrors, 17·72-inch, lower right	1	—	Spare.
	Mirrors, 17·72-inch, upper left	1	—	Spare.
	Mirrors, 17·72-inch, upper right	1	—	Spare.
Sights, turret, Dover (with bracket, inclined plane, and 4 fixing screws, and sight-recording and gun-recording gear)	fore	—	1	
	hind, left *or* right	—	1	

Digitized by Google

EQUIPMENT OF R.M.L. 12·5-IN., 12-IN. (35 OR 25-TONS), 11-IN., 10·4-IN., 10-IN., 9-IN., AND 7-IN. GUNS.

TABLE 4.	Proportions.	Remarks.
Woolwich Store Charge, No. 2.		
Bars, crow, 6-feet	1 per battery	To act as powerful levers.
Horns, powder*	1 per battery for all ordnance	For priming guns if required.
57 Malta 9205 **Lamps**, tracing†	2 per gun...	For night firing.
Woolwich Store Charge, No. 4.		
53 D'port. 5104 **Carts**, shot‡	1 per sub-district ...	For moving projectiles.
Drugs, gun, 25 tons§	1 per district	For moving guns up to 25 tons.
Limbers, sling wagon, 12 tons ... **Wagons**, sling, 12 tons	1 per district	Capable of moving guns up to 12 tons. *See* note.§
Woolwich Store Charge, No. 5.		
Brushes, water, carriage	2 per gun...	1 for cleaning the sponge, and 1 for projectiles in gun emplacements.
Woolwich Store Charge, No. 7.		
Chests, tool, filled { No. 3 D	As authorised by para. 201	For repair of carriages and slides.
{ No. 11 A... ...	1 per work	
Boards, range	1 per 2 guns of same nature (except 9-inch Mark VI*a.*), or when mounted singly, 1 per gun	To be provided locally.‖
Cans, oil, lubricating { G. S.** ...	1 per gun on turntables	For lubricating bearings of turntables.
{ smiths** ...	1 to 4 or less number of guns per work	Globular can, with fine spout.
Hammers, claw, 28-oz.	2 per battery	For general use.
Woolwich Store Charge, No. 8.		
Spanners { Armament Artificers, double-ended { 1½-in. and 1⅝-in.	1 set per work	For adjusting and tightening up bolts and nuts.
{ 1½-in. ,, 1⅝-in.		
{ 1-in. ,, 1⅛-in.		
{ ¾-in. ,, ⅞-in.		
{ ⅝-in. ,, ¾-in.		
{ McMahon, 15-inch	1 per battery, for all ordnance	For tightening nuts, &c.
Wrenches, knock up, G.S.	1 per work; 2 if over 10 traversing slides ...	For tightening nuts, available for all natures of traversing slides.

* Contains 1½ lbs. of gunpowder, included in proportion at page 331.

† Oil and wick for these are supplied by Army Service Corps, as required.

‡ Where trench carts are already in possession they need not be exchanged for shot carts until they become unserviceable.

§ Drugs are specially intended for confined localities where the sling wagon could not be used, they would not therefore *both* be supplied except in important and extensive districts. They will in all cases be made the subject of special requisition.

57 Gibraltar 5740 ‖ The fuze scale is either painted on the board or printed on paper and attached to the board.

** When these cans become unserviceable they will be replaced by "Can, lubricating, No. 9."

Digitized by Google

Equipment of R.M.L. 12·5-in., 12-in. (35 or 25-tons), 11-in., 10·4-in., 10-in., 9-in., and 7-in. Guns—*continued.*

TABLE 4—*continued.*	Proportions.	Remarks.
Woolwich Store Charge No. 8—continued.		
TOOLS, ORDNANCE.		
Tools, examining, painting and lacquering rifled ordnance ... sets	1 per district	According to the nature of ordnance in the district. For detail of tools, *see* Table A, pages 140 to 145.
Tools, venting, ordnance ... sets	As authorized	For detail of tools, *see* Appendix VIII, pages 238 to 245.
Woolwich Store Charge, No. 10.		
Filters, hydraulic jack	2 per sub-district; for small port carriages, 1 per work	For filling the jack.
Frames, store, hydraulic jack ...	1 for every 4 or less number of hydraulic jacks in a sub-district	For keeping the jacks under pressure.
Frames, store, hydraulic jack, Block packing { cap, rear roller jack; foot, rear roller jack }	1 per jack when not permanently kept on a carriage	For use in the "frame store, hydraulic jack."
Jacks, lifting, hydraulic, Tangye's* { 22½ tons ...; 15 tons ...; 7½ tons ...; Spanners }	2 per district for guns of 35 or 38 tons; 2 per district for guns of 25 tons; 3 per sub-district ...; 1 per 2 jacks O.P. ...	For general purposes. For taking jacks to pieces. N.B.—A spanner is supplied with the N.P. jack.
Pad, frame, store, hydraulic jack ...	1 per hydraulic lifting jack.	
Slings, chain, 12 to 25 tons { breech; muzzle }	1 per heavy gyn.	
Turnscrews, slide, L., R.M.L. 12·5-inch	1 to 5 guns or less, 35 and 38-ton per work	For connecting running in and out chains of slides.
Woolwich Store Charge, No. 11.		
Chalk, white ... ... lbs.	2 per gun	Annual supply.
Glycerine ... ... lbs.	1 per gauge pressure dead weight testing, Mark II.	For lubricating gauge.
Methylated Spirits ... ... galls.	As required for 9-inch high angle carriage	For H.P. cylinders.
Oil, mineral	As required for 9-inch high angle carriage; also sufficient to fill hydraulic buffers of other carriages and slides	For H.P. cylinders.
Soda, carbonate, dry	As required for 9-inch high angle carriages	For H.P. cylinders.
Solution, caustic soda, 1 pint bottles	As required for 9-inch high angle carriages	For reservoir, compressed air.

57
Gen. No.
6433

* Instructions for the care and use of these jacks are given at paras. 646 to 659, and in R.C.D. lithographs, Nos. 79 and 80, which should be demanded as required. Tangye's jacks will be replaced by G.S. jacks, of 30, 20, and 10 tons respectively, as the present stock of the former becomes used up.

Digitized by Google

Equipment of R.M.L. 12·5-in., 12-in. (35 or 25-tons), 11-in., 10·4-in., 10-in., 9-in., and 7-in. Guns—*continued.*

TABLE 4—*continued.*		Proportions.	Remarks.
Woolwich Store Charge, No. 13.			
Forges, field, R.A., Mark IV ..		As authorised	*See* paragraph 201.
Woolwich Store Charge, No. 14.			
Axletrees, transporting, slide, R.M.L., 11-inch to 7-inch		1 of each nature for each district or group of sub-districts (such as Isle of Wight or Portland) where required and roads are suitable.	
Barrows, projectile	No. 1 ...	1 per R.M.L. 12·5-in. gun (except for emplacements with hydraulic muzzle lifts).	For service at the guns.*
	,, 2 ...	1 per 12-in. 35-ton gun ...	
	,, 3 ...	1 per 12-in. 25-ton or 11-in. gun	
	,, 5 ...	1 per 10-in. gun† ...	
	,, 6 ...	1 per gun. R.M.L. 12·5-inch, for emplacements with hydraulic muzzle lifts; and R.M.L. 10·4-inch.	
	,, 11 ...	1 per 9-in. and 7-in. gun	
Buckets, sponge, garrison		1 per gun	For general use.
Carriages, garrison‡	R.M.L.§ (12·5-in. to 7-inch) casemate or dwarf small port	1 per gun, according to description of mounting approved.	For component and spare parts, *see* pages 544 to 577.
	R.M.L.§ 12·5-in. converted small port		
	R.M.L.§ 10·4-in. barbette ...		
	R.M.L.§ 10-inch Mark III ...		
	R.M.L.§ 9-inch Mark II ...		
	R.M.L.§ 9-inch high angle ...		
	R.M.L.§ 9-in. and 7-in. Moncrieff		
	sliding medium, No. 7		
	Special Implements.		
Carriages, garrison, R.M.L. 12·5-in. small port	Bars, lifting pump ...	1 per 6 or less carriages per work	For raising hydraulic lift.
	Brackets, lifting pump		
	Pipes, buffer, hydraulic filling	1 per work	For 7-feet recoil carriages only.
	Pipes, lift, hydraulic		
	Spanners	... ...	*See* Appendix XI, pages 278 to 292.
	Tommies	... ...	
	Wrenches ram leather	1 per work.	
	Wrenches spindle		
	Wrenches gland		

* In open works, not paved, a "Barrow, projectile, road," will be allowed in addition for each 35- or 38-ton gun, for transporting projectiles over roads, gravel, &c. "Barrows, projectile, shingle," are also allowed to certain works for transporting 12-in. and 12·5-in, projectiles over sand and shingle.

† No. 4 barrows in use with 10-in. guns will continue in use until worn out.

‡ When mounted in casemates, drip pans are supplied for attachment to the carriage or slide to catch the drip of oil from the hydraulic buffer.

§ Carriages mounted on slides, with fixed loading stages, in sunken way emplacements, will have a loop fitted on each side for guide ropes of rammers, except the 12·5-inch, which are fitted with metal guide brackets instead of loops.

57 / 24 / 1839
38407 / Equip. / 1459
57 / Vocab. / 2891
38407 / Equip. / 1554 / 71 / 1 / 4425

Digitized by Google

Equipment of R.M.L. 12·5-in., 12-in. (35 or 25-tons), 11-in., 10·4-in., 10-in., 9-in., and 7-in. Guns—*continued.*

TABLE 4—*continued.*

	Proportions.	Remarks.
Woolwich Store Charge, No. 14—continued.		
Connections, indicator pressure ...	1 per 9-inch high angle carriage	For connecting indicator to recoil cylinders.
Covers, gear, firing, electric, No. 1 ...	1 per 10·4-inch gun ...	
Gauge, pressure, dead weight, testing Mark II.	1 per sub-district for 9-inch high angle carriage.	
Gyns, triangle, with appurtenances { heavy* ... / light† ...	1 per sub-district, or 2 if more than 3 works. (In exceptional positions, if more are considered necessary, they must be specially applied for)	Heavy for 12-ton guns and under, Light for 7-ton guns and under, of all natures.
Handspikes, common, 7-ft. ...	2 per gun...	Not to exceed 12 per work.
Indicator, pressure, spring, Mark II.	1 per 9-inch gun on high angle carriage.	
Levers { iron shod { crow, 7 feet ...	1 per work for all ordnance	For drawing bolts, &c.
iron shod { slide, L, 5 feet	2 per slide, but if fitted with traversing gear, 2 per work	Used in traversing the slide.
pointed { No. 1 ... / No. 2 ...	2 per gun, except 10-in. small port, all guns on Moncrieff and high angle carriages, and guns mounted in sunken way emplacements with fixed loading stages	For 25-ton guns and over / For guns under 25 tons } For elevating the gun or running up the carriage.
pointed { No. 3	2 per 10-in. small port gun	For running up or back.
pointed { No. 5, 6, *or* 7 ...	3 per Moncrieff 7-in. or 9-in. gun	
pointed { No. 8	2 per gun mounted in sunken way emplacements with fixed loading stages.	
8 feet	1 per heavy gyn... ...	For lifting prypole.

* Complete with 1 gyn tackle, 1 erecting ditto (except for Mark II gyns), 4 windlass levers with ropes, 3 wood trucks, 3 slings of 9-inch rope (16, 7, and 3 feet long), and lashing for short slings. A gyn tackle consists of 18 fathoms of 5-inch white bolt (or hawser-laid) rope, with 2 treble 15-inch Bothway blocks. An erecting tackle consists of 7 fathoms of 2¼-inch white rope, with 1 single 8-inch Admiralty block, for Mark I gyns, and 7 fathoms of 2½-inch white rope without the 8-inch block for the Mark II gyns; it is employed to raise the gyn tackle to the head of the gyn. There are also required 1 8-feet lever, and 4 heavy drag ropes (these will be supplied from the equipment of the work in which the gyn is required).

† Complete with one gyn tackle, 4 levers (2 of which with ropes), 3 wood trucks, and 2 slings of 7-inch white rope. The gyn tackle consists of 18 fathoms of 4-inch white bolt rope with 2 treble 12-inch Bothway blocks. There are also required 4 heavy drag ropes (these will be supplied from the equipment of the work in which the gyn is required).

57 D'port 5473
57 Gen. No. 5056
71 1 3314
... 3314
54 St. Lucia 504
38407 Equip. 1656

Digitized by Google

Equipment of R.M.L. 12·5-in., 12-in. (35 or 25 tons), 11-in., 10·4-in., 10-in., 9-in., and 7-in. Guns—*continued.*

TABLE 4—*continued.*	Proportions.	Remarks.
Woolwich Store Charge, No. 14—continued.		
Limbers, transporting slide, L, iron	1 for each district or group of sub-districts (such as Isle of Wight or Portland) where required, and roads are suitable	*See* Axletrees.
Measures, hydraulic buffer: draw-off, 2 pints	1 per work for 12·5-in. small port carriages	For 7-ft. recoil carriages only.
Measures, hydraulic buffer: filling	1 per work	For filling the cylinders of hydraulic buffers and cylinders of high angle carriages.
Pump, air, double, carriage, garrison, hydro-pneumatic ...	1 per work of 3 or less 9-inch guns on high angle carriages. 2 per work if over 3 carriages.	
Reservoirs, compressed air*	1 per 9-inch high angle carriage.	
57 / 24 / 1893 **Sabots,** barrow, projectile, No. 1 ...	1 per 12·5-inch and 10·4-inch projectile.	For Nos. 1 and 6 projectile barrows.
Separators, air pump...	1 per pump	To separate the air from water.
Slides, L. R.M.L. (12·5-inch to 7-inch) converted small port casemate *or* dwarf small port	1 per gun, according to description of mounting approved	Moncrieff slides are issued with the carriages.
Slides, L. R.M.L. 10·4-inch barbette; 10-inch, "C" pivot Mark II; 9-inch, "C" pivot Marks II and III; medium, No. 7		For component and spare parts, *see* pages 578 to 619.
Spanners, and special implements for mountings	1 per 7-inch 6½ ton	*See* Appendix XI, pages 278 to 292.
Stages, loading	1 per gun	For each gun in C or D emplacement with sunken ways when not provided with fixed loading stages.
38407 / Equip. / 1429 **Trestles,** loading	1 per 11-inch and 12-inch 25-ton guns in "C" emplacements, without sunken ways	For supporting the side arms when loading.
57 / Vocab. / 2891 **Trolleys,** loading, R.M.L.	1 per 9-inch Mark VI*a*	For loading.
Wheels, transporting, No. 85 ...	1 pair for each district or group of sub-districts (such as Isle of Wight or Portland) where required, and roads are suitable	*See* Axletrees.

* To be kept in Artillery Store when not in use.

Digitized by Google

Equipment of R.M.L. 12·5-in., 12-in. (35 or 25-tons), 11-in., 10·4-in., 10-in., 9-in., and 7-in. Guns—*continued.*

TABLE 4—*continued.*	Proportions.	Remarks.
Woolwich Store Charge, No. 14—continued.		
Wrenches, pivot { No. 1	1 per battery	For fixing the elevating arcs of 7-inch guns and upwards, and the muzzle derricks and index plates of 9-inch guns and upwards.
,, 4	1 per battery, except 12·5-inch Mark II and 10·4-inch	For fixing screws of reflecting sights and elevating plates, and for removing pivots.
Woolwich Store Charge, No. 15.		
Barrows, powder	1 per work	For moving powder or filled cartridges.
Boxes, grease, 3 lbs.	1 to 3 guns under 11-in. per work	For guns of higher natures, a grease box is fitted to each slide.
Woolwich Store Charge, No. 16.		
Plugs, vent	1 per gun except 12·5-inch Mark II, 10·4-inch and 9-inch Mark VI*a*.	To protect the vents of mounted guns at home stations and in cold climates.*
Spikes, gun { common	2 per gun except 9-inch Mark VI*a*.	For spiking vents permanently.
spring, A or B† ...	1 per gun where required	For spiking vents temporarily.
Ventservers‡	2 per gun except 12·5-inch Mark II, 10·4-inch and 9-inch Mark VI*a*.	To place in the vent while loading, also for plugging the vents of guns mounted in warm climates, the lanyard being removed for this purpose.
Wrenches, sight, S.B.	1 per battery	For securing readers.
Woolwich Store Charge, No. 17.		
Ordnance, R.M.L. { 12·5 to 7-inch	As authorised	For fittings component and spare parts, also special implements and appurtenances, *see* pages 466 to 471.
covers, vent, steel, cone	1 per 9-inch gun, having the vent, steel, cone.	To protect the vent.
cradles, vent	1 per battery for 12·5-inch Mark II guns	
tommies, contact	1 per 10·4-inch gun	
wrench, stud, trunnion	1 per 12·5 inch Mark II gun.	

73
3
3695
57
Ports.
2707

* At Halifax the vents will be secured by tow steeped in Field's grease and capped with putty.

† Only to be demanded for guns in advanced or exposed works.

‡ Whipcord should be demanded separately, for making the lanyards.

Digitized by Google

Equipment of R.M.L. 12·5-in. 12-in. (35 or 25-tons), 11-in., 10·4-in., 10-in., 9-in., and 7-in. Guns—*continued.*

TABLE 4—*continued.*	Proportions.	Remarks.
Woolwich Store Charge, No. 17—continued.		
57 D'port. 4210 **Prickers,** vent: 29-inch	2 per 12-inch 35-ton or 12·5-inch Mark I gun.	
Prickers, vent: 23-inch	2 per 9-inch up to 12-inch 25-ton guns, except 10·4-inch and 9-inch Mark VI*a*.	
Prickers, vent: 17-inch	2 per 7-inch gun.	
Punches, vent: 22-inch ..	1 per 10-inch and up to 12·5-inch Mark I guns inclusive, except 10·4-inch	Used for removing obstructions in vent channel.
Punches, vent: 17-inch ...	1 per 7-inch, and 9-inch guns, except 9-inch Mark VI*a*.	Used for removing obstructions in vent channel.
Wrenches, sight, R.M.L. acorn ...	1 per battery	For fixing and removing the G.H.J. (acorn) sights.
Woolwich Store Charge, No. 18.		
Bags, extractor, projectile: 12·5-in.	12·5-in. to 10-in., except 10·4-in. and 9-in. and 7-in.	1 per extractor To cover the head.
Bags, extractor, projectile: 9 „		
Blocks: loading tackle, No. 8* ...	2 per gun 10-inch and upwards fitted with muzzle derricks mounted in sunken way emplacements.	For rammer ropes.
57 St. Helena 1690 **Blocks:** wood, Bothway, single 8-inch	1 per gun, mounted in sunken way emplacements with movable loading stages.†	For the running end of fall of loading tackle. The block is hooked into a permanent eye in the wall of the parapet.
Brushes, piassaba, R.M.L. (12·5-inch to 7-inch)	1 per practice battery for each nature of gun from which practice is carried on	For cleaning out the grooves.
Caps, sponge (No. 9 to No. 14)‡ ...	1 per sponge where necessary	To protect sponge head.
Cordage, hawser, 3-strand white, fms.	According to gun§ ...	For the running back gear.
Extractors, projectile R.M.L.: (12·5-inch to 7-inch)	2 per battery of each kind required, except 10·4-in. guns and 7-in. guns on Moncrieff carriages.	The 10, 11, and 12-inch studded take the same extractor.
Extractors, projectile R.M.L.: 7-in. Mark II	2 per battery for 7-inch guns on Moncrieff carriages.	

* For the 12·5-inch with fixed landing stages the rammer ropes are passed through metal guide brackets fixed to the sides of the carriages.

† When the slides are fitted with *fixed* loading stages, iron snatch blocks form part of the slide (*see* pages 580 and 581).

‡ Only to be used for sponges in transit or where stores are damp.

§ 35-ton guns take 12 fms. 3½-inch rope, 25-ton guns 13 fms. 3-inch, and 18 and 12-ton guns 10 fms. 3-inch rope.

Digitized by Google

Equipment of R.M.L. 12·5-in., 12-in. (35 or 25 tons), 11-in., 10·4-in., 10-in., 9-in., and 7-in. Guns—*continued.*

TABLE 4—*continued.*	Proportions.	Remarks.
Woolwich Store Charge, No. 18—continued.		
Heads, rammer and sponge	1 per 10·4-in. gun.	
Keys, tampeon, large	1 per 2 or less number of 10·4-in. guns	Securing tampeon in gun.
Lashings, white, 1¼-inch, 24-feet ...	1 per rammer for 7-in. 6½-ton guns on 6-ft. parapet carriage and slide	For ramming home when necessary.
Rammers, R.M.L. (12·5-inch to 7-inch) 7 tons*	1 per gun on sliding carriage, except 10·4-inch	
Rammers, R.M.L. 9-inch Moncrieff ...	1 per 9-inch gun on Moncrieff carriage.	
Rammers, R.M.L. 7-inch 6½ tons	1 per gun on 6-ft. parapet carriage and slide	For emplacements 75 feet above sea level.
Rammers, R.M.L. jointed, 7-inch 6½-tons, 6-ft. parapet	1 per 7-inch 6½-ton gun on 6-ft. parapet carriage and slide	For emplacements below 75 feet
Rammers, R.M.L. jointed, 7-inch Moncrieff ...	1 per 7-inch gun on Moncrieff carriage.	
Ropes drag, heavy ... ... prs.	2 per work for all ordnance.	
Ropes guide, rammer, R.M.L. ...	2 per rammer 12·5-inch to 10-inch. All 9-inch mounted behind shields and in sunken way emplacements, also 7-inch 6½-ton with straight rammer†	To assist in loading.
Selvagees, projectile...	2 per 9-inch gun and over	For hoisting projectile to muzzle.
Sponges, R.M.L. 12·5-inch to 7-inch)‡ ...	1 per gun on sliding carriage, except 10·4-inch.	
Sponges, R.M.L. 9-inch Moncrieff	1 per 9-inch gun on Moncrieff carriage.	
Sponges, R.M.L. 7-inch Moncrieff ...	1 per 7-inch gun on Moncrieff carriage.	
Sponges, R.M.L. 7-inch 6½ tons, 6-foot parapet ...	1 per 7-inch 6½-ton gun on 6-ft. carriage and slide	
Staves end, R.M.L. 9-inch Moncrieff	1 per set of side arms for 9-inch guns on Moncrieff carriages	For lengthening the side arms. The construction of the Moncrieff pit does not allow of the use of a side arm with a long wood stave in one piece.
Staves extractor, projectile, R.M.L. 7-inch Moncrieff	1 to every 3 7-inch guns on Moncrieff and 6-ft. parapet carriages in a work	For use with the extractor projectile, and worm wadhook.
Stores for moving, mounting, &c., heavy R.M.L. guns	*See* para. 96, and Appendix I.	18- to 38-ton guns.

57
I. of Wt.
913

* In the case of 12·5-inch guns in casemates, an iron eye is fitted to the back of the head, for slinging the rammer. For 12·5-inch guns that can only be fired with blank charges during peace time at station practice, an additional rammer of Mark I pattern will be allowed; the Mark II pattern (§ 3840 L.C.) being too short in the stave for blank charges.

† Loops for rammer ropes for the 9-inch gun will be fitted locally, and in demanding rammers for these guns the number of loops required should be stated.

‡ In the case of 38-ton guns in casemates, an iron eye is fitted to back of head for slinging the sponge.

Digitized by Google

Equipment of R.M.L. 12·5-in., 12-in. (35 or 25 tons), 11-in., 10·4-in., 10-in., 9-in., and 7-in. Guns—*continued.*

	TABLE 4—*continued.*	Proportions.	Remarks.
	Woolwich Store Charge, No. 18—continued.		
	Tackles, gun, 3-inch white rope*	2 per 2 or less traversing slide when not fitted with traversing gear, if so fitted 2 per battery	For traversing the slide and running the gun back at drill, where there is no running back gear.
		2 per 2 guns or less, mounted on Moncrieff carriages per work	For running back the gun.
57 I. of Wt. 875	**Tackles,** loading,† derricks { 12·5-inch‡ / 10-inch§ ...	1 per gun, 9-inch and over mounted in open works	For raising the projectiles to the muzzle.
		1 per gun, 9-inch and over, mounted in emplacements provided with sunken ways and movable loading stages	For placing the projectiles on the loading stages.
		1 per derrick for 9-inch Mark VI*a*	
57 Devonport 4210	**Tackles,** loading,† shields { 12·5-inch ‖ / 10-inch¶...	1 per gun, 9-inch and over, mounted behind shields	For raising the projectiles to the muzzle.
		2 per gun, mounted on turntable	1 for front and 1 for rear loading.
	Tackles, slinging side arms** prs.	1 per 12·5-inch gun in casemates and on turntables, also 1 per 10-inch gun on turntable	For slinging side arms to roof of casemate.
	Tampeons, R.M.L. (12·5-inch to 7-inch)††	1 per gun	For the muzzle; to protect the bore.

* Consists of 16 fms. of 3-inch white rope, with 1 double and 1 treble 9-inch Admiralty blocks.

† For description and mode of application, *see* §§ 3907 and 4675, Lists of Changes.

‡ For 12·5-inch, 12-inch, and 11-inch guns, 1 treble and 1 double block, with hooks, and 10 fms. of 2½-inch white rope.

§ For 10-inch and 9-inch guns, 1 double and 1 single block, with hooks and 7½ fms. of 2-inch white rope.

‖ For 12·5-inch, 12-inch, and 11-inch guns, 1 treble block with shackle (except in certain works mentioned in Appendix I, where a special block with large hook is required), and 1 double block with hook, and 10 fms. of 2½-inch white rope.

¶ For 10-inch and 9-inch guns, 1 double block with shackle and 1 single block with hook, and 7½ fms. of 2-inch white rope.

** Consists of:—

Woolwich Store Charge, 18.

Balls, tackle, slinging side arms ... 1	Eyes, tackle, slinging side arms ... 1
Blocks, loading tackle, No. 8... ... 1	Hooks, tackle, slinging side arms ... 1
Cordage, hawser, 3-strand, white, 1½-inch (lengths of 10 feet)... ... 2	Rings, tackle, slinging side arms ... 2

57 Devonport 4210 The ropes are connected by a ring, having at one end another ring, and at the other end a ball and a hook, the latter to fit into the small eye in the rammer or sponge head. Where 2-inch tarred rope is in use with these tackles it will not be replaced until worn out.

†† The two 9-inch Mark VI guns at Fort Cumberland, Southern District, which cannot be depressed, are provided with muzzle covers.

Digitized by Google

Equipment of R.M.L. 12·5-in., 12-in. (35 or 25-tons), 11-in., 10·4-in., 10-in., 9-in., and 7-in. Guns—*continued.*

TABLE 4—*continued.*	Proportions.	Remarks.
Woolwich Store Charge, No. 18—continued.		
Wadhooks, R.M.L. (12·5-inch to 7-inch) ...	1 to every 3 guns, except 10·4-inch, in a work or battery, according to calibre*	For drawing charge and searching the bore.
9-inch Moncrieff ...		
Worms, wadhook, No. 1	1 per 3·7-inch guns for jointed stave in a work.	
Woolwich Store Charge, No. 19.		
Scotches, medium	As required	For scotching up the ends of piles of projectiles, *see* para. 694.
Skids 6 ft. 8 in. × 6 in. × 4 in. ...	1 per carriage 12·5-inch (7 feet recoil), fitted with rear roller jack	For keeping the carriage run back on its rollers when the rear roller jack is pumped up to preserve the leather packings.
Skids 5 ft. 8 in. × 6 in. × 4 in. ...	1 per carriage 12·5-inch (6 feet recoil), fitted with rear roller jack	
Woolwich Store Charge, No. 20.		
Bags, burster, R.M.L., common (12·5-inch to 7-inch)	1 per empty shell.	
Bearers, cartridge cylinder, Mark III†	2 per gun...	For carrying and opening cylinders 10-inch and upwards. For opening cylinders 9 and 7-inch.
Cylinders, cartridge, R.M.L. ...	As required.	
Woolwich Store Charge, No. 21.		
Bags, primer, filled, 7 drams... ...	3 per empty common shell.	

5
Vocab.
2891

57
Portsmouth
232

* If additional wadhooks are required for drill, they must be collected from other guns.
† These are only required when the cartridge stores are far from the guns.

Digitized by Google

Equipment of R.M.L. 12·5-in., 12-in. (35 or 25 tons), 11-in., 10·4-in., 10-in., 9-in., and 7-in. Guns—*continued.*

TABLE 4—*continued.*

				Proportions. Per Palliser shot.	Per Shell.	Per Round of case shot.	Remarks.
Cartridges, R.M.L., filled, serge *or* silk cloth	12·5-inch	82½ lb. *a*		2	2	2	½-charge, Mark I gun.
		50* ,, *a*		4	4	4	½-charge, Mark II gun.
	12 ,,	110 ,, ...		1	1 *b*	1	35-ton gun.
		85 ,, ...		1	1 *c*	1	
		55 ,, ...		—	1 *d*	—	
	,,	85 ,, ...		1	1 *e*	1	
		60 ,, ...		—	1 *d*	—	
	10·4 ,,	95 ,, *a*		1	1	1	
	10 ,,	70 ,, ...		1	1 *e*	1	
		44 ,, ...		—	1 *d*	—	
	9 ,,	25 ,, *a*		2	2 *f*	2	½-charge†
		33 ,, ...		—	1 *d*	—	
	9 ,,	12½ ,, *a*		4	4	—	¼-charge, Mark VI*a* gun.
57 / 3 / 7715	9 ,,	6¼ ,, ...		—	—	—	⅛-charge, Mark VI*a* gun.‡
	7 ,,	30 ,, ...		1	1 *g*	1	
		17 ,, ...		—	1 *h*	—	

All the cartridges in Royal Artillery charge will be kept filled as far as store accommodation will admit. *See* para. 80.

a. Silk cloth only.

b. Studless common and Shrapnel shell, and studded common shell not fitted for gas checks, except Mark I and II, also paper shot.

c. Studded common Mark I and II and Shrapnel shell 35-ton gun, also studless common and Shrapnel shell, and Palliser, paper, and case shot, 25-ton gun.

d. Studded common shell fitted for gas checks, and studded Shrapnel shell.

e. Studless common and Shrapnel shell, and studded common shell not fitted for gas checks, also paper shot.

38407 / Equip. / 1452

f. All projectiles for guns mounted on Moncrieff carriages, studless common and Shrapnel shell, studded common and Shrapnel shell not fitted for gas checks, Mark VI, studded common shell and paper shot for guns mounted otherwise than on Moncrieff carriages.

g. All projectiles for guns mounted on Moncrieff carriages, studded common shell and paper shot for guns mounted otherwise than on Moncrieff carriages.

h. Studded Shrapnel shell.

* 47½ lb. ($\frac{1}{2}$) charges Prism 2 will be used for practice.

57 / 3 / 7715

† The 50 lb. charges will be first used up.

‡ 100 per gun. The ⅛-charge is for use in conjunction with a ¼-charge when it becomes neeessary to fire ⅜-charges.

Digitized by Google

Equipment of R.M.L. 12·5-in., 12-in. (35 or 25 tons), 11-in., 10·4-in., 10-in., 9-in., and 7-in. Guns—*continued.*

TABLE 4—*continued.*	Proportions.	Remarks.	
Woolwich Store Charge, No. 21—continued.			
Gunpowder { rifle pistol, R.F.G., *or* R.F.G.[2] lb.	Sufficient to fill shells supplied empty*	Bursters of Shrapnel shell and powder horns.	
Gunpowder { shell P. and F.G. lb.		Bursters of common shell.	
Woolwich Store Charge, No. 22.			
Boxes, tube { garrison	1 per gun, except 12·5-inch Mark II 10·4-inch and 9-inch, Mark VI*a*	For friction tubes.	
Boxes, tube { vent-sealing, garrison ...	1 per 12·5-inch Mark II 10·4-inch, and 9-inch Mark VI*a* guns	To be hung up on the walls of the casemate as a receptacle for 1 tin	75 / 7 / 5740
Fuzes† percussion { base, No. 11, large direct action,‡	1 per common shell 9-in. Mark VI*a*	box of tubes.	
Fuzes† percussion { No. 3	1 per common shell 9-in. and over, except 9-inch Mark VI*a*		
Fuzes† percussion { Pettman, G.S., No. 5	1 per 7-in. common shell	Issued in cylinders containing 5 each.	
Fuzes† time { 15 seconds, M.L.,§ No. 41	1 per Shrapnel shell over 10-inch, also 7-in.		
Fuzes† time { 15 seconds, with detonator, No. 43	1 per Shrapnel shell 9-in. and 10-in.		
Implements, fuze and shell { Extractors, fuze, small rifled	1 per gun	For extracting wood fuzes.	
Implements, fuze and shell { Bits, hook borer ...	6 per gun	For guns with Shrapnel shell only.	
Implements, fuze and shell { Cylinders, common	1 per gun		
Implements, fuze and shell { Handles, hook borer	1 per gun		
Implements, fuze and shell { Hooks, hook borer ...	1 per gun		
Implements, fuze and shell { Keys, fuze, universal‖	2 per gun		
Implements, fuze and shell { Wrenches, base plug	1 per gun.		
Lanyards, friction tube, garrison { No. 1	3 per 12·5-in. Mark II.		
Lanyards, friction tube, garrison { No. 2	3 per gun on Moncrieff carriages		57 / Devonport / 4210
Lanyards, friction tube, garrison { No. 3	3 per gun, except 12·5-in. Mark II, 10·4-in., 9-in. Mark VI*a*, and guns on Moncrieff carriages		
Pockets, tube, electric, No. 10 ...	1 per gun in connection with position-finders, except axial vented and 9-inch Mark VI*a* guns	To hold one cylinder.	57 / Devonport / 4210
Primers, Shrapnel shell	1 per empty Shrapnel shell	Issued in cylinders containing 10 each.	

* If the gunpowder demanded according to regulated weight of bursting charges proves insufficient to completely fill the shells, additional powder will be supplied, but the circumstances should be fully explained on the requisition.

† The designation number is shown on the label of the cylinder or other package in which the fuze is packed. The number stamped on the fuze itself denotes the number of the thousand manufactured.

‡ Pettman, G.S., may be used with 9-in., 10-in. and 12-in. studless shell and full charges.

§ Will replace the 9-seconds fuze when the store is used up.

‖ The "keys fuze, and plug G.S." now on charge will first be used up.

Digitized by Google

Equipment of R.M.L. 12·5-in., 12-in. (35 or 25 tons), 11-in., 10·4-in., 10-in., 9-in., and 7-in. Guns—*continued.*

TABLE 4—*continued.*		Proportions.	Remarks.
Woolwich Store Charge, No. 22—continued.			
Straps, tube box, long...		1 per garrison tube box.	
Tubes*	electric, No. 10 ...	1 per round for 9-inch guns and over (except axial vented guns and 9-inch Mark VI*a*) in connection with position finders.	
		1 per round for 9-inch guns and over (except axial vented guns and 9-inch Mark VI*a*) not in connection with position finders.	
73 / 3 / 6215	friction, copper, solid drawn, with ball	1 per round for 9-inch guns and over (except axial vented guns and 9-inch Mark VI*a*) in connection with position finders.	
		1 per round for 7-inch guns.	
	vent-sealing, electric, P	1 per round for 10·4-inch and 9-inch Mark VI*a* guns.	
... / 5848	vent-sealing, electric, V	1 per round for 12·5-inch Mark II guns in connection with position finders.	
		1 per round for 12·5-inch Mark II guns not in connection with position finders.	
	vent-sealing, friction, V	1 per round for 12·5-inch Mark II guns in connection with position finders.	
... / 6315			
Woolwich Store Charge, No. 24.			
Bearers, shot, R.M.L.	9-inch ... / 7 ,, ...	1 per 9-in. gun / 1 per 7-in. gun — when specially required	Used in loading.
Gas-checks, R.M.L.	12·5-inch to 9-inch, except 9-inch Mark VI*a*.	1 per studless projectile, and 1 per studded Palliser or common 9-inch to 12·5-inch, and Shrapnel 12·5-inch.	For fixing to the base of the projectile.
	9-inch, poly groove	1 per projectile, 9-inch Mark VI*a*.	
Gauges, shell, ring, R.M.L.	body and gas checks (12·5-in. to 9-in.) / (body and studs, 12·5-in. to 7-in., except 10·4-in.)	1 per sub-district, per calibre.	

* After being fired the tubes will be returned to store and forwarded to Woolwich as old metal.

Digitized by Google

Equipment of R.M.L. 12·5-in., 12-in., (35 or 25 tons), 11-in., 10·4-in., 10-in., 9-in., and 7-in. Guns—*continued.*

TABLE 4—*continued.*	Proportions.	Remarks.	
Woolwich Store Charge, No. 24—continued.			
Grummets, projectile...	1 per studless Palliser shot (except Mark II) and 1 per 12·5-inch studless cast-iron common and Shrapnel shell.	For protecting base.	
Implements, spanners, gas-check, fuze and shell nut, 7-inch	1 per gun...	For 7-inch guns and over.	
Levers, grummet	2 per gun.	For removing grummets from base of projectiles.	
Planks, stacking projectiles, heavy...	1 per 3 guns or under, for 9 inch guns and over	For rolling projectiles on.	
Plugs, fuze hole, G.S., without loops	1 per shell.		
Shells, R.M.L., filled	... ...	*See* end of Table.	
Shot, R.M.L.			
Wads, wedge 9-inch...	12·5 inch to 9-inch (except 10·4-inch, and 9-inch Mark VI*a*) 1 per round except case shot	Placed in front of the projectile to prevent its shifting.	57
			Vocab.
			2891
8 ,, ...	7-inch ...		
9 ,, ...	1 per 7-inch, 6½ tons on No. 7 medium carriage	For placing under the front roller to prevent the carriage running up after recoil.	71
			1
			5788
Woolwich Store Charge, No. 25.			
Lamps, fighting*	2 per casemate.		
Measures, glass, 4 oz. ...	1 per work of only one 9-inch high angle carriage.	For measuring caustic soda solution.	
	2 per work of more than one carriage		
Woolwich Store Charge, No. 27.			
Flags, red, 12 ft. × 6 ft.	1 for each practice battery	*See* para. 107.	
			57
Woolwich Store Charge, No. 28.			Gibraltar.
Batteries, Le Clanché, 3-cell§ ...	1 per 10·4-inch and 9-inch high angle guns	For firing purposes.	5740
			73
Batteries, test, Menotti	1 per district	For testing tubes. For 10·4-inch and 9-inch high angle guns.	3
			6315
Cable, firing electric, twin†	30 yards per gun ...	For electric firing leads.	73
Lamps, electric, telescope	1 per position-finder or depression range-finder where the electric search light is installed		3
			6691
Lamps, electric, telescope: battery, Le Clanché, 4 cells‡	1 per lamp		
leads, flexible, double strand, 2½ yards (a)‡	1 ,,		
switch and resistance coil‡	1 ,,		73
wires, connecting, "C.5." 6 yards	1 ,,		3
			6315
			73
			3
			6691

* Oil and wick for these are supplied by Army Service Corps, as required.
† D 5 wire will be issued as required for renewal of standing wires on carriages.
‡ These would not require to be exchanged in the event of a lamp being damaged.
§ As these batteries become unserviceable, they will be replaced by the "Battery and Key, test and firing."

Digitized by Google

Equipment of R.M.L. 12·5-in., 12-in. (35 or 25 tons), 11-in., 10·4-in. 10-in., 9-in., and 7-in. Guns—*continued.*

TABLE 4—*continued.*	Proportions.	Remarks.
Position-finders, { depression ... horizontal ...	As authorised ... As authorised ...	For coast batteries with site too low to allow the use of a depression instrument. *See* paras. 108–114
Woolwich Store Charge, No. 29.		
38407 Equipment 1631 **Clinometers,** large*	1 per work	For giving quadrant elevation and measuring vertical angles.
Hydro-Clinometers	1 per gun, 9-inch and upwards, except 10·4-inch, and 9-inch on Moncrieff and high angle mountings.	
Indicators, range	As authorised	For coast batteries.
Range finders, depression	As authorised	*See* para. 94, and Appendix III.
Stands, telescope, 2½-inch socket ... 57 Ports.	1 per work for coast batteries where a flag is displayed by regulation	These may also be allowed to important works when specially recommended.
2800 **Tapes,** measuring, 50 feet	1 per sub-district ...	For measuring cordage, &c.
Telescopes, 3 feet 73 3 6691	1 per work for coast batteries where a flag is displayed by regulation	These may also be allowed to important works when specially recommended.

38407 Equip. 1476 * Stations having "Clinometers, Watkin," will retain them in use until they become unserviceable, when they will be replaced by the "Clinometer, large."

Digitized by Google

Equipment of R.M.L. 12·5-in., 12-in. (35 or 25 tons), 11-in., 10·4-in., 10-in., 9-in., and 7-in. Guns—*continued.*

(F.O. R.) 57 Gen. No. 5224

The proportions of projectiles herein laid down will, except for 9-inch Mark VI*a*, and 7-inch R.M.L., be maintained for the total number of guns of each nature in a district, but the number of each description of projectile for individual guns will be decided by the general officer commanding the district, according to the relative importance of the position of each gun, and the purpose for which its fire would most probably be required in the event of an attack, provided that the total, viz. :—100 round per gun at home, and 200 rounds abroad, is adhered to.

For the 9-inch Mark VI*a*, and 7-inch R.M.L., the proportions herein given will be maintained for each gun in all cases.

TABLE 4—*continued.*

	Class I. Guns supported by auxiliary fire, or by guns of smaller calibre bearing on the same field.		Class II. Guns unsupported (or practically unsupported) by auxiliary fire.		Class III. Guns which only fire on land fronts.	Special. For Ironclad Forts.			Remarks.
						Spithead Forts and Portland Breakwater.	Plymouth Breakwater.		
	9-inch and upwards. **	7-inch.	9-inch and upwards.	7-inch.*	Such as the 7-inch guns at Hoo Fort.		12·5-inch.	10-inch.	
Shells, R.M.L.† common...	50	70	40	70	45	45	45	45	Per 100 rounds.
Shrapnel	—	20	15	15	45	—	—	—	
Shot, R.M.L. case‡ ...	—	—	10	10	20	5	5	10	
Palliser ...	50	10	40	10	—	50	50	10§	

57 Portsmouth 2747
57 Sierra Leone 1270
57 Devonport 4210

** The proportion for the 9-inch Mark VI*a* on high angle carriage is 100 common studless heavy cast steel shell. The studless heavy Palliser shot, at present on charge, will be expended at practice and replaced by the common cast steel shells.

* The proportions for the 7-inch guns at Sierra Leone, will be:—Common shells 60, Shrapnel shell 25, Case shot 10, and Palliser shot 10.

† Supplied with fuze hole plugs, which, however, are separately shown and are to be separately charged and accounted for.

‡ 2 shot per round except 12·5-inch and 10·4-inch.

§ The remaining 40 to be kept in ordnance store charge.

Digitized by Google

EQUIPMENT OF R.M.L. 6·6-INCH, 80-PR. (CONVERTED), 64-PR. (WROUGHT-IRON OR CONVERTED), AND 40-PR. GUNS.

Armament of Works.

TABLE 5.	Proportions.	Remarks.
Woolwich Store Charge, No. 2.		
Horns, powder*	1 per battery, for all ordnance.	For priming guns if required.
Woolwich Store Charge, No. 4.		
57 D'port. 5199 **Carts**, trench	1 per sub-district... ...	For moving projectiles.
Drugs, gun, 5 tons	1 per district	Suitable for all ordnance up to 5 tons. *See* note §, page 320.
Limbers, sling wagon, 6 tons...	1 per district, if necessary.	Available also for B.L. and S.B. ordnance. *See* note §, page 320.
Wagons, sling, 6 tons		
Woolwich Store Charge, No. 5.		
Brushes, water, carriage ...	2 per gun	1 for cleaning the sponge, and 1 for projectiles in gun emplacement.
Woolwich Store Charge, No. 7.		
Chests, tool, filled { No. 4 C ...	As authorised. *See* para. 201.	
{ ,, 11 A	1 per work.	
Boards, range	1 per 2 guns of same nature, or 1 per gun where mounted singly	To be prepared locally.†
Cans, oil, lubricating, smiths ‡	1 per 6 guns or less per work	Globular can with fine spout.
Hammers, claw, 28 oz.	2 per battery for all ordnance.	For general use.
Woolwich Store Charge, No. 8.		
Spanners, McMahon, 15-inch...	1 per battery for all ordnance.	For tightening nuts, &c.
Wrenches, knock up, G.S. ...	1 per work, 2 if over 10 slides.	For tightening nuts, &c., available for all natures of slides.
TOOLS, ORDNANCE.		
Tools { cleaning, examining and painting ordnance, sets	1 per district	According to the nature of ordnance in the district. For detail of tools *see* pages 140 to 145.
{ venting ordnance sets	As authorised. *See* para. 201.	For detail of tools *see* Appendix VIII, pages 238 to 245.

* Contains 1½ lbs. of gunpowder, included in the proportions at page 342.

† The fuze scale is either painted on the board, or printed on paper and attached to the board.

57 Gen. No. 4017

‡ When these cans become unserviceable they will be replaced by "Can lubricating, No. 9."

Digitized by Google

Equipment of R.M.L. 6·6-in., 80-pr. (Converted), 64-pr. (Wrought-iron or Converted), and 40-pr. Guns—Armament of Works—*continued.*

TABLE 5—*continued.*	Proportions.	Remarks.
Woolwich Store Charge, No. 10.		
Apparatus, anchoring, carriage, hydro-pneumatic	1 per carriage	For 6·6-in. gun on siege carriage.
Plates, wheel, platform, siege sets	1 per double-decked platform.	
Woolwich Store Charge, No. 11.		
Chalk, white ... ... lbs.	2 per gun	Annual supply.
Oil, mineral ... gallons	Sufficient to fill the hydraulic buffer.	
Woolwich Store Charge, No. 13.		
Forges, field, R.A., Mark IV	As authorised. *See* para. 201.	
Woolwich Store Charge, No. 14.		
Axletrees, transporting, slide, L. — iron, R.M.L. 7-inch medium, wood ...	1 for wood and 1 for iron slide for each District or group of sub-districts (such as Isle of Wight or Portland) where required, and roads are suitable.	A further supply will be allowed, when necessary, on special representation. Those for wood slides as well as their limbers and wheels, are available also for the R.B.L. and S.B. ordnance.
Buckets, sponge, garrison ...	1 per 2 guns	To hold water for damping the sponge.
Buffers, hydraulic, circular ...	... ...	For No. 8 medium slide, 64-pr. fitted with circular buffers.
Buffers, hydraulic, circular — (Special Implements.) Rings	1 per battery ...	Metal, guide, leather packing.
Spanners — No. 1		Box, piston, and valve block.
,, 2		Locking valve.
Wrenches — ,, 1		Gland rings.
,, 2		And screw-driver, securing valve and valve block, with tommy.
Carriages — garrison, R.M.L. — 64-pr. 71 to 58 cwt., common	1 per gun, according to description of mounting approved	No. 1 (iron), No. 2 (iron), or wood, 64-pr. 58 cwt. Wood carriages are fitted with Allen brakes.
64-pr. 58 cwt. — depression		
64-pr. 58 cwt. — Moncrieff		
garrison, sliding medium (Nos. 8, 9, 10, 11, 12, 13, 14, 21, 22, 23, 24, and 25).		
siege, R.M.L. — 6·6-in. gun*		For component and spare parts, *see* pages 620 to 652.
siege, R.M.L. — 40-pr. ...		

* The liquid used in cylinders of 6·6-inch H.P. carriages is the same as that described in para. 460.

Digitized by Google

Equipment of R.M.L. 6·6-in., 80-pr. (Converted), 64-pr. (Wrought-iron or Converted), and 40-pr. Guns—Armament of Works—*continued*.

TABLE 5—*continued*.	Proportions.	Remarks.
Woolwich Store Charge, No. 14—continued.		
(SPECIAL IMPLEMENTS.)		
Carriages, siege, R.M.L. 6·6-inch gun: Drivers, screw, No. 9 ...	1 per 6·6-in. carriage.	
Keys: box, set screw ...	1 ,, ,,	
Keys: box, union ...	1 ,, ,,	
Keys: gland	1 ,, ,,	
Keys: plug	1 ,, ,,	
Keys: T	1 ,, ,,	
Mallets	2 ,, ,,	
Spanners: double ended 1-in. and $\frac{7}{8}$-in.	1 ,, ,,	
Spanners: double ended $\frac{3}{4}$-in. and $\frac{5}{8}$-in.	1 ,, ,,	
Spanners: $1\frac{1}{2}$-in. lock nut ...	1 ,, ,,	
Spanners: $1\frac{1}{4}$-in. lock nut and air plug	1 ,, ,,	
Spanners: socket, 2-inch ...	1 ,, ,,	
Tommies	1 ,, ,,	
Coins, hand: No. 4	1 per 40-pr. siege carriage	
Coins, hand: ,, 7	1 ,, ,,	
Derricks, loading, slide, L.: medium No. 8 ...	1 per 64-pr. mounted on 5 ft. 6 in. or 6 ft. parapet carriage and slide.	Fitted to the slide.
Derricks, loading, slide, L.: medium ,, 9 ...		
Derricks, loading, slide, L.: R.M.L. 80-pr. 6 ft. parapet	1 per 80-pr. mounted on 5 ft. 6 in. or 6 ft. parapet carriage and slide.	
Derricks, loading, slide, L.: R.M.L. 80-pr. 5 ft. 6 in. parapet		
57 D'port. 5199 **Drivers**, screw, No. 1	2 per double decked platform	For use when laying double decked platforms.
Gyns, triangle, with appurtenances, light	1 per sub-district or 2 if more than 3 works (in exceptional positions, if more are considered necessary they must be specially applied for).	Available for all ordnance of 7 tons and under. For complete set of stores *see* note.† page 323.
Handspikes: common 7 ft. ...	2 per rear chock carriage	64-prs. only.
Handspikes: common 7 ft. ...	2 ,, sliding ,,	80-prs. only.
Handspikes: common 7 ft. ...	5 ,, travelling ,,	6·6-in. only.
57 Gibraltar 5932 **Handspikes**: common 6 ft. ...	2 ,, sliding ,,	64-prs. and 40-prs.
Handspikes: common 6 ft. ...	5 ,, common or travelling siege carriage.	
Handspikes: metal roller 7 ft. L.S.	2 per wood sliding carriage, and 1 per 64-pr. depression carriage.	To run the gun up.
Indicators, pressure, spring, R.M.L. 6·6-in. gun.	1 per 6·6-in. carriage.	
Levers, iron shod: crow, 7 ft.	1 per work for all ordnance.	For drawing bolts, &c.
Levers, iron shod: slide, L., 4 ft.	2 per gun on sliding carriage.	For traversing the slide.

Digitized by Google

Equipment of R.M.L. 6·6-in., 80-pr. (Converted), 64-pr. (Wrought-iron or Converted), and 40-pr. Guns—Armament of Works *—continued.*

TABLE 5—*continued.*	Proportions.	Remarks.
Woolwich Store Charge, No. 14—continued.		
Levers, pointed, No. 2. ...	2 per gun on carriages with rear eccentrics. 3 per gun on Moncrieff carriage.	For running up the gun.
Limbers siege, 6·6-in. gun ... R.M.L. 40-pr.	1 per carriage	For 6·6-in. or 40-pr. siege carriages.
Limbers transporting iron ... slide L. medium	1 for wood, and 1 for iron slide in each district or group of sub-districts (such as Isle of Wight or Portland) where required, and roads are suitable.	*See* Axletrees.
Measures, hydraulic buffer, filling	1 per work where required.	For filling the hydraulic buffer.
Pedestals, carriage garrison, common, R.M.L. 64-pr. 58 cwt. medium, No. 6, No. 15, No. 22, or No. 23	1 per carriage fitted with elevating screw	To replace elevating screw when removed.
Planks, trail, siege	1 per double-decked platform	
Plates ground, siege	1 set of 3 per carriage ...	For wheels and trail of 6·6-in. siege carriage.
Plates pivot, double-decked platform	1 per double-decked platform	With under plate and bolts.
Platforms, siege double-decked, "C" pivot*	1 per 40-pr. gun on travelling siege carriage.	
Plugs, pivot, No. 17	1 per double-decked platform.	
Pumps, air, R.M.L. 6·6-in. gun	1 per 6·6-in. carriage ...	For charging the cylinder of hydro-pneumatic carriages.
Slides, L., medium, No. 8, No. 9, No. 10, No. 11, No. 12, No. 13, No. 14, No. 16, No. 18, No. 19, and No. 20	1 per sliding carriage according to description of work.	Moncrieff slides are included with the carriages. For components and spare parts, *see* pages 654 to 663.
Spanners, hydraulic buffer ...	... ...	*See* Appendix XI, page 278.
Swingletrees, No. 1	3 per 6·6-in. and 40-pr. guns.	
Wheels, transporting, No. 85 *or* No. 86.	1 pair for each transporting axletree in each district or group of sub-districts (such as Isle of Wight or Portland) where required, and roads are suitable.	*See* Axletrees. No. 85 for axletree of iron slide, L; No. 86 for axletree of wood slide, L.
Wrenches, forked, slide, L, wood, medium	1 per district	For altering the flanges, &c.; available also for all wood slides, L.

38407
Equip.
1616

* To be kept in ordnance store, or Royal Artillery charge for Army Ordnance Department, as best suits the requirements of each locality. To be demanded and aid for service by the Royal Engineers, but for instructional purposes of Royal Artillery may be drawn and laid by them.

Devonport
2024

Digitized by Google

Equipment of R.M.L. 6·6-in., 80-pr. (Converted), 64-pr. (Wrought-iron or Converted) and 40-pr. Guns—Armament of Works—*continued*.

TABLE 5—*continued*.	Proportions.	Remarks.
Woolwich Store Charge, No. 14—continued.		
Wrenches, pivot, No. 4 ...	1 per battery	For removing and fixing elevating plates, also for removing fittings of 40-pr. guns.
Woolwich Store Charge, No. 16.		
Plugs, vent	1 per gun	To protect the vent at home stations and in cold climates.*
Spikes, gun { common	2 per gun	For spiking vents permanently.
Spikes, gun { spring, B, C, *or* D†	1 per gun when required	For spiking vents temporarily.
Vent-servers ‡	2 per gun	To place in the vent while loading; also for plugging the vents of guns mounted in warm climates; the lanyard being removed for this purpose.
Wrench, sight, S.B.	1 per 10 guns, or less per work.	For fixing or removing the sight; available also for S.B.
Woolwich Store Charge, No. 17.		
Ordnance, R.M.L. { 6·6-in. ... ... 80-pr. ... ... 64-pr. 71 cwt., 64 cwt., or 58 cwt. 40-pr.	As authorised ...	For Fittings, component and spare parts and appurtenances, *see* pages 466 to 471.
Prickers, vent, 12-in.	1 per gun	To clear the vent.
Punches, vent { 12-inch ...	1 per 6·6-inch, 80-pr., and 64-pr. gun.	
Punches, vent { 8-inch ...	1 per 40-pr. gun.	
Wrenches, sight, R.M.L. { fore, 12·5-in.	1 per 10 guns, or less per work.	For fore-sight of 64-pr. 64 cwt. and 80-pr., and 6·6-in. R.M.L. guns.
Wrenches, sight, R.M.L. { muzzle ...	1 per 10 guns, or less per work.	For muzzle-sight, 64-pr. 58 cwt. gun.
Woolwich Store Charge, No. 18.		
Bags, extractor, projectile, 9-inch	1 per extractor	To cover the head.
Brushes, piasaba, R.M.L. { 80-pr.	For 80- and 64-prs. 1 per battery from which practice is carried on.	For cleaning out the grooves.
Brushes, piasaba, R.M.L. { 6·6-inch	For 6·6-in.	
Brushes, piasaba, R.M.L. { 40-pr.	For 40-pr.	
Caps, sponge§ { No. 7	1 per 40-pr. sponge	To protect sponge head.
Caps, sponge§ { ,, 8	1 per 80- or 64-pr. sponge	
Caps, sponge§ { ,, 9	1 per 6·6-in. sponge where necessary	

* At Halifax the vents will be secured by tow steeped in Field's grease and capped with putty.

† Only to be demanded for guns in advanced or open works.

‡ Whipcord should be demanded separately for making the lanyards.

§ Only to be used for sponges in transit or where stores are damp, or when kept in the open.

Digitized by Google

Equipment of R.M.L. 6·6-in., 80-pr. (Converted), 64-pr. (Wrought-iron or Converted), and 40-pr. Guns—Armament of Works—*continued*.

TABLE 5—*continued*.	Proportions.	Remarks.
Woolwich Store Charge, No. 18—continued.		
Cases, cartridge, No. 4	2 per gun	To bring filled cartridges to gun in action.
Cordage { hawser, 3 strand, 1½-inch, white, fathoms	4 per 80 or 64-pr. mounted on blocked up slides	For rammer ropes.
Cordage { spunyarn, fathoms	1 ,, ,,	For securing rammer ropes to end of stave.
Extractors, projectile, R.M.L. { 80 pr. ... / 64 pr. ...	2 per battery ... ... / 2 per battery.	Also for 6·6-in. gun.
Rammers { 80-pr. ... ... / 64-pr. ... ... / 40-pr.	1 per gun on other carriage.	
Rammers { jointed { 6·6 - in. gun / 64-pr. ...	1 per gun on Moncrieff, H.P., or medium No. 8 or No. 9 carriages.	
Ropes, drag, heavy ... pairs	2 per work for all ordnance.	
Selvagees, ordinary	2 per 6·6-in. and 40-pr. guns, and 64-pr. gun on Moncrieff carriage.	
Sponges, R.M.L. 6·6-inch gun	1 per 6·6-inch gun.	
Sponges, R.M.L. 64-pr. { wire rope stave, 58 cwt.	1 per 64-pr. 58 cwt. gun on Moncrieff carriage, or on 5-ft. 6-in. or 6-ft. parapet carriage.	
Sponges, R.M.L. 64-pr. { wood stave, 58 cwt.	1 per gun on other carriage.	Also for 64-pr., 71 cwt. and 80-pr.
Sponges, R.M.L. 64-pr., 64 cwt., wood stave { A and B chambers / C and D chambers	1 per gun. / 1 per gun.	
Sponges, R.M.L. 40-pr., wood stave	1 per 40-pr. gun.	
Sponges, R.M.L. 64 pr. { wire rope stave { A and B chambers / C and D chambers	1 per gun. / 1 per gun.	
Staves, worm, wadhook ...	1 per 6·6-in. gun	38407 Equip.
Tackles { gun, 2½-inch tarred rope*	2 per 2 or less slides, L.	For running the gun back at drill. 1631
Tackles { hauling down, R.M.L., 64-pr. gun.	1 per gun mounted on slides, medium Nos. 18 and 20.	For depressing the gun.
Tackles { luff, 14 fathoms ...	2 per 2 or less Moncrieff carriages, and 1 per 2 or less 64-pr. depression carriages	For running the gun back at drill. 57 Gibraltar 5932
Tackles { whip upon whip ...	1 per 2 or less common standing carriages.	
Tampeons, R.M.L.† { 6·6-inch ... ... / 80-pr. ... ... / 40-pr.	1 per 6·6-in. gun ... ... / 1 per 80 or 64-pr. gun ... / 1 per 40-pr. gun.	To protect the bore.

* Also available for traversing, when necessary, the 64-pr. R.M.L. guns on 6 ft. parapet (blocked up) slides other than those on C pivot.

† A junk wad should be demanded for, and attached to each tampeon.

Digitized by Google

Equipment of R.M.L. 6·6-in., 80-pr. (Converted), 64-pr. (Wrought-iron or Converted), and 40-pr. Guns—Armament of Works—*continued.*

TABLE 5—*continued.*	Proportions.	Remarks.
Woolwich Store Charge, No. 18—continued.		
Wadhooks { R.M.L. { 7-in. 6½ tons. / 40-pr. ... } / S.B. 8-in. gun ...	for 64-pr., 64 and 71-cwt. / for 80-pr. and 64-pr., 58-cwt. } 1 per every 3 guns in a work.*	For drawing the charge and searching the bore.
38407 Equip. 1631 **Worms,** wadhook, No. 3 ...	1 per 6·6-in. gun.	
Woolwich Store Charge, No. 19.		
Scotches, medium	As required.	
Woolwich Store Charge, No. 20.		
Bags, burster, R.M.L., common { 6·6-in. / 80-pr. / 64-pr. / 40-pr. }	1 per empty common shell.	
Woolwich Store Charge, No. 21.		
Bags, primer, filled, 7 drams ...	3 per empty common shell.	
Gunpowder Cartridges, R.M.L., filled, serge *or* silk cloth.† 6·6-inch, 12½ lb. P. ...	2	
80-pr., 12 lb. P.	1	
64-pr. 10 lb. R.L.G.⁴ ...	1	Full, Mark III. gun only.
64-pr. 8¼ ,, ,, ...	1	Full, 71 and 58 cwt., and reduced, Mark III. guns.
64-pr. 6½ ,, ,, ...	1 per round of ammunition.	Full, Mark I. and II. guns, and reduced, 71 and 58 cwt. guns.
64-pr. 8 ,, R.L.G.² ...	1	Mark III. gun.
64-pr. 6 ,, ,, ...	1	64-pr. guns, except Mark III.
40-pr. 7 ,, ,, ...	1	
40-pr. 6¾ ,, R.L.G.⁴ ...	1	
pistol, rifle pistol, F.G., R.F.G., *or* R.F.G.².	Sufficient to fill shells, supplied empty. *See* footnote *, page 331.	For primer bags of common shells, bursting charges of Shrapnel shells, and powder horns.
Shell P and F.G.		For bursting charges of common shells.

* If additional wadhooks are required for drill, they must be collected from other guns.

† All the cartridges in Royal Artillery charge will be kept filled as far as store accommodation will admit. *See* para. 80.

Digitized by Google

Equipment of R.M.L. 6·6-in., 80-pr. (Converted), 64-pr. (Wrought-iron or Converted), and 40-pr. Guns—Armament of Works—*continued.*

TABLE 5—*continued.*	Proportions.	Remarks.
Woolwich Store Charge, No. 22.		
Boxes, tube, garrison	1 per gun	For friction tubes.
Fuzes* percussion: direct action, No. 3†	1 per common shell ...	Except 40-pr.
Fuzes* percussion: R.L., No 7... ...	1 ,, ,, ,, ...	For 40-pr. gun.
Fuzes* time, 15 seconds: M.L., No. 41 ...	1 ,, Shrapnel shell ...	80-pr. studded, and 64-pr.
Fuzes* time, 15 seconds: with detonator, No. 43.	1 ,, ,, ,, ...	6·6-in., 80-pr. studless, and 40-pr.
Implements, fuze and shell: Bits, hookborer ...	6 per gun.	
Implements, fuze and shell: Cylinders, common	1 ,,	
Implements, fuze and shell: Extractors, fuze, small, rifled.	1 ,,	
Implements, fuze and shell: Handles, hookborer	1 ,,	
Implements, fuze and shell: Hooks, hookborer ...	1 ,,	
Implements, fuze and shell: Keys, fuze, universal‡	1 ,, ...	2 per gun required when the Mark III direct action fuzes are used.
Implements, fuze and shell: Spanners, gas check	1 per 40-pr.	
Lanyards, friction tube: garrison No. 2	3 per gun on Moncrieff carriages.	
Lanyards, friction tube: garrison ,, 3	3 per gun on sliding and common carriages.	
Lanyards, friction tube: siege, No. 1 ...	3 per 40-pr. gun on siege carriage.	
Primers, Shrapnel shell ...	1 per empty Shrapnel shell	In cylinders of 10 each.
Straps, tube box, long	1 per tube box.	
Tubes, friction, copper, solid drawn with ball	1 per round	Issued in cylinders containing 25 each.
Woolwich Store Charge, No. 24		
Bearers, shot, R.M.L., 80-pr....	1 per 6·6-in. and 80-pr. guns	Used for loading.
Gas checks, R.M.L. 6·6-inch	1 per shell and Palliser shot.	For fixing to the base of the projectile.
Gas checks, R.M.L. 80-pr. ...	1 per studless shell ...	For fixing to the base of the projectile.
Gas checks, R.M.L. 40-pr. ...	1 per shell	For fixing to the base of the projectile.
Gauges, shell, ring, R.M.L. body and gas checks 6·6-inch 80-pr. ...	1 per district.	
Gauges, shell, ring, R.M.L. body and studs 80-pr. ... 64-pr. ... 40-pr. ...	1 per district.	
Plugs, fuze-hole, G.S., without loops	1 per shell.	
Shells, R.M.L., filled§ common 6·6-in. ...	78 per cent.	
Shells, R.M.L., filled§ common 80-pr. ...	60 ,,	
Shells, R.M.L., filled§ common 64-pr. ...	60 ,,	
Shells, R.M.L., filled§ common 40-pr. ...	60 ,,	
Shells, R.M.L., filled§ Shrapnel 6·6-in. ...	10 ,,	
Shells, R.M.L., filled§ Shrapnel 80-pr. ...	30 ,,	
Shells, R.M.L., filled§ Shrapnel 64-pr. ...	30 ,,	
Shells, R.M.L., filled§ Shrapnel 40-pr. ...	36 ,,	

38407
Equip.
1457

75
7
5285

* In cylinders of 5 each. The designation number is shown on the label of the cylinder or other package in which the fuze is packed. The number stamped on the fuze itself denotes the number of the thousand manufactured.

† Mark III for sea fronts, and Marks I* and II for land fronts.

‡ Keys, fuze, and plug G.S. now on charge will continue to be used until worn out.

§ Supplied with fuze-hole plugs, which, however, are separately shown, and are to be separately charged and accounted for.

Digitized by Google

Equipment of R.M.L. 6·6-in., 80-pr. (Converted), 64-pr. (Wrought-iron or Converted), and 40-pr. Guns—Armament of Works—*continued.*

TABLE 5—*continued.*	Proportions.	Remarks.
Woolwich Store Charge, No. 24—continued.		
Shot, R.M.L. case 6·6-inch... ...	2 per cent.	
case 80-pr.	10 ,, ,, ...	Also for 64-pr.
case 40-pr.	4 ,, ,,	
Palliser, 6·6-inch ...	10 ,, ,,	
Wads, wedge, 8-inch	1 per round, except case shot; for 80-pr. and 64-pr.	Placed in front of the projectile to prevent its shifting.
Woolwich Store Charge, No. 25.		
Lamps, fighting*	2 per casemate.	
Woolwich Store Charge, No. 27.		
57 Gibraltar 5740 **Flags**, red, 12 ft. × 6 ft. ...	1 for each practice battery.	*See* para. 107.
Woolwich Store Charge, No. 29.		
57 Cork. 4063 **Clinometers**, large†	1 per work...	For giving quadrant elevation, and measuring vertical angles.
57 Gibraltar 740 **Tapes**, measuring, 50 feet ...	1 per sub-district... ...	For measuring cordage, &c.

* Oil and wick for these are supplied by Army Service Corps, as required.

† Stations having "Clinometer, Watkin," will retain them in use until they become unserviceable, when they will be replaced by the "Clinometer, large."

38407 Equip. 1476 Screws, preserving, are placed in all fixing screw and other holes in the guns when the fittings are removed for storage or transport.

Digitized by Google

EQUIPMENT OF R.B.L. 7-INCH, 40-PR., AND 20-PR. GUNS.

Armament of Works.

TABLE 6.	Proportions.	Remarks.
Woolwich Store Charge, No. 4.		
Carts, trench	1 per sub-district ...	For moving projectiles.
Drags, gun, 5 tons	1 per district	Suitable for all ordnance up to 5 tons. *See* note §, page 320.
Limbers, sling wagon, 6 tons ...	1 per district, if necessary	Available for all light ordnance. *See* note §, page 320.
Wagons, sling, 6 tons		
Woolwich Store Charge, No. 5.		
Brushes, water, carriage	2 per gun...	1 for cleaning the sponge, and 1 for cleaning the projectiles.
Woolwich Store Charge, No. 7.		
Chests { tool, empty (with tools shown at Appendix IX, page 256). Special, repairing R.B.L. guns, land service	As authorised, *see* para. 201.	
tool, filled { No. 4c ...	As authorised, *vide* para. 201.	
,, 11A ...	1 per work.	
Boards, range	1 per 2 guns of same nature, or 1 per gun where mounted singly	To be prepared locally.*
Cans, oil, lubricating, smiths† ...	1 per 2 guns or under, but not exceeding 5 per work	Globular can, with fine spout.
Files, second cut { safe edge, 12-inch ...	1 per 2 7-inch guns per work.	For filing nose of vent piece.
half round, 8 ,, ...	1 per 40 and 20-pr. ...	
Hammers, claw, 28-oz.	2 per battery for all ordnance.	
Woolwich Store Charge, No. 8.		
Punches, R.B.L. guns, steel { 13-inch ...	1 per 7-inch and 40-pr. gun	For removing keep-pins, &c.
6 ,, ...	1 per 20-pr. ,, ...	
Spanners, McMahon, 15-inch ...	1 per battery for guns on standing and sliding carriages, 2 per battery for guns on travelling siege carriages	For tightening nuts, &c.
Wrenches, knock up, G.S.	1 per work, 2 if over 10 slides	For tightening nuts, &c. Available for all natures of slides.

* The fuze scale is either painted on the board, or printed on paper and attached to the board.

† When these cans become unserviceable they will be replaced by "Can, lubricating, No. 9."

Digitized by Google

Equipment of R.B.L. 7-in., 40-pr., and 20-pr. Guns—Armament of Works—*continued.*

TABLE G—*continued.*	Proportions.	Remarks.
Woolwich Store Charge, No. 8—continued.		
TOOLS, ORDNANCE.		
Tools, examining, painting and lacquering rifled ordnance ... sets	1 per district	According to the nature of ordnance in the district. For detail of tools, *see* pages 140 to 145.
Woolwich Store Charge, No. 10.		
Covers, vent, R.B.L. — 7-inch ... ... / 40-pr. ... ... / 40-pr., sideclosing / 20-pr.	1 per gun	To protect vent slots and sights.
Jacks, lifting, screw, Clerk's... ...	2 per work	For travelling siege carriages.
Plates, wheel, platform, siege sets	1 per double-decked platform.	
Woolwich Store Charge, No. 11.		
Chalk, white ... ... lbs.	2 per gun...	Annual supply.
Oil, mineral ... ... gallons	Sufficient to fill the hydraulic buffer	
Woolwich Store Charge, No. 13.		
Carriages, field, R.B.L. 20-pr. ...	1 per gun.	
Forges, field, R.A., Mark IV... ...	As authorised. *See* paragraph 201.	
Limbers, field, R.B.L. 20-pr. carriage	1 per carriage.	
Woolwich Store Charge, No, 14.		
Axletrees, transporting — Slides, L., iron, R.M.L. 7-inch (for medium slides, L., Nos. 1, 2, and 3) / slide, L., medium, wood	1 for each nature as required for each district or group of sub-districts (such as Isle of Wight or Portland), where wanted, and roads are suitable	A further supply will be allowed, when necessary, on special representation. These articles with their limbers and wheels are also available for 80 or 64-pr. and S.B.
Buckets, sponge, garrison	1 per 2 guns; for guns on Moncrieff carriages, 1 per gun	To hold water for damping the sponge.
Carriages — garrison — R.B.L. — 7-inch Moncrieff ... ... / 40-pr., common — wood, converted non-recoil, No. 2 ... ... / sliding medium (Nos. 1, 2, 3, 4, 5, 15, 16, 17, 18, 19, or 20) / siege, R.B.L. 40-pr., 6-ft. parapet	1 per gun according to description of mounting approved	For component and spare parts, *see* pages 620 to 652.
Cases — pricker, vent, siege R.B.L. / 40-pr., 6-ft. parapet	1 per 40-pr, 6-ft. parapet carriage.*	

* Issued with the carriage.

Digitized by Google

Equipment of R.B.L. 7-in., 40-pr., and 20-pr. Guns—Armament of Works—*continued.*

TABLE G—*continued.*	Proportions.	Remarks.
Woolwich Store Charge, No. 14—continued.		
Compressors, land service, R.B.L. 7-inch*	As required	For 7-inch R.B.L. guns only.
Drivers, screw, No. 1	2 per double-decked platform	For use when laying double-decked platforms.
Gyns, triangle, with appurtenances, light, tubular	1 per sub-district, or 2 if more than 3 works (in exceptional positions, if more are considered necessary, they must be specially applied for)	Available for all ordnance of 7 tons and under. For complete set of stores, *see* note,† page 323.
Handspikes — common — 7 feet ...	2 per 7-inch gun... ...	On rear chock and sliding carriages.
Handspikes — common — 6 feet ...	2 per 40-pr. or 20-pr. ...	On sliding carriage.
	5 per 40-pr.	On wood and iron standing carriages and travelling siege carriages.
Handspikes — metal roller, 7 feet, L.S.	2 per No. 16 sliding carriage	To run the gun up or back.
Levers, iron-shod — crow, 7 feet	1 per work for all ordnance	To draw bolts out of slides, &c.
Levers, iron-shod — slide, L, 4 feet	2 per gun on sliding carriage	For traversing the slide.
Levers — pointed — No. 2	2 per gun on carriages with rear eccentrics	To run the gun up or back.
Levers — pointed — No. 4 ..	2 per 7-inch gun on Moncrieff carriages	
Levers — 8 feet	1 per work	For travelling siege carriages.
Limbers — siege, R.B.L. 40-pr., iron	1 for every 3 40-pr. guns or less	For travelling siege carriages.
Limbers — transporting slide, L. — iron / medium	1 for each nature as required for each district or group of sub-districts (such as Isle of Wight or Portland), where wanted, and roads are suitable	*See* Axletrees.
Measures, hydraulic buffer, filling...	1 per work where required	For filling the hydraulic buffers.
Pedestals, carriage — garrison, common, R.B.L. 40-pr. / medium (Nos. 15, 16, 19, and 20)	1 per carriage, fitted with elevating screw	To replace elevating screw when removed.
Planks, trail, siege	1 per double-decked platform	
Plates, pivot, double-decked platform	1 per double-decked platform	With under plates and bolts.
Platforms, siege, double-decked "C" pivot.*	1 per 40-pr. on travelling siege carriage	

* These will be kept in R.A. Store when not in use.

† To be kept in ordnance store, or Royal Artillery Charge for Army Ordnance Department, as best suits the requirements of each locality. To be demanded and laid for service by the Royal Engineers, but for instructional purposes of Royal Artillery may be drawn and laid by them.

Digitized by Google

Equipment of R.B.L. 7-in., 40-pr., and 20-pr. Guns—Armament of Works—*continued.*

	TABLE 6—*continued.*	Proportions.	Remarks.
	Woolwich Store Charge, No. 14—continued.		
38407 Equip. 1631	**Plugs**, pivot, No. 17	1 per double-decked platform	
	Rollers, shifting, No. 2*	1 per 40-pr., 6-feet parapet, siege carriage	
	Slides, L. medium (Nos. 1, 2, 3, 4, 5, 11, 12, 13, 14, 15, 16, and 17)	According to description of works	Moncrieff slides are included with the carriages. For component and spare parts, *see* pages 654 to 663.
38407 Equip. 1616	**Spanners**, hydraulic buffer	... ...	*See* Appendix XI, page 278.
	Swingletrees, No. 1	3 per 40-pr. gun.	
	Wheels, transporting No. 85 / No. 86	1 pair for each nature as required for each district, or group of sub-districts (such as Isle of Wight or Portland), where wanted, and roads are suitable	No. 85 or No. 86, according to the nature of the axletree.
	Wrenches forked, slide, L., wood, medium	1 per sub-district ..	For altering the flanges, &c. Suitable for all wood slides, L.
	Wrenches pivot, No. 4	1 per work for 7-inch R.B.L. guns fitted with elevating arcs, or mounted on counter-weight carriage	For fixing or removing screws, pivots, &c.
	Woolwich Store Charge, No. 15.		
	Boxes, grease, 3 lbs.	1 to 3 guns	Suitable for all rifled guns.
	Woolwich Store Charge, No. 16.		
	Chests, tool, empty (with tools shown at page 246) facing R.B.L. guns: 7-inch ... / 40-pr. ... / 20-pr. ...	As authorised, *vide* paragraph 201.	For repairing the guns.
	Ordnance, R.B.L. 7-inch: 82 cwt., land service ... / 72 cwt. ...	As authorised ...	For fittings, special implements, and appurtenances, *see* pages 472 to 475.
	Ordnance, R.B.L. 40-pr.: 35 cwt., land service ... / 32 cwt., land service ...		
	Ordnance, R.B.L. 40-pr., side closing ...		
	Ordnance, R.B.L. 20-pr., 16-cwt.		
	Spikes, gun, common	2 per gun...	For spiking vents permanently.
	Vent-servers†	2 per 40-pr. side closing gun	To place in the vent while loading.

* Issued with the carriage.

† Whipcord should be demanded separately for making the lanyards.

Digitized by Google

Equipment of R.B.L. 7-in., 40-pr., and 20-pr. Guns—Armament of Works—*continued.*

TABLE G—*continued.*	Proportions.	Remarks.
Woolwich Store Charge, No. 17.		
Prickers, vent, 12-inch	2 per 40-pr. side closing gun	To clear the vent.
Punches, vent, 8-inch...	1 per 40-pr. side closing gun	
Woolwich Store Charge, No. 18.		
Brushes, piasaba, R.B.L. 7-inch ... / 40 pr. ... / 20-pr. ...	1 per practice battery for each nature from which practice is carried on	For cleaning out the grooves.
Caps, sponge* No. 5 ... ... / ,, 7 ... ... / ,, 9	20-pr. } 1 per sponge / 40 ,, } where neces- / 7-inch } sary	To protect sponge head.
Cases, cartridge No. 2 ... ... / ,, 5	7-inch } 2 per / 40 pr. or 20-pr. } gun	To bring filled cartridges to gun in action.
Coatings, sponge, R.B.L. 7-inch ... / 40-pr. .. / 20-pr. ...	1 per 100 rounds of ammunition	Spare, for sponge head.
Rammers, R.B.L. 7-inch ... ... / 40-pr., 5 feet... / 20-pr.	1 per gun.	
Ropes, drag, heavy ... ... pairs	2 per work for all ordnance, and 2 per limber for guns on travelling siege carriages	
Slings, rope, 6-inch, 11 feet long ...	2 per work for guns on travelling siege carriages	For shifting guns.
Sponges, R.B.L. 7-inch ... ... / 40-pr. ... ... / 20-pr.	1 per gun	
Tackles gun, 3-inch white rope ...	2 per 2 or less 7-inch guns on Moncrieff carriages	For running the gun back, &c.
Tackles luff, 14 fathoms	2 per work, for slides if not already provided for other guns therein, and 4 per work for guns on travelling siege carriages	To meet contingencies.
		For shifting the guns.
Tampeons, R.B.L. 7-inch breech... ... / 7-inch muzzle ... / 40-pr. breech... ... / 40-pr. muzzle ... / 20-pr. breech... ... / 20-pr. muzzle ...	1 per gun	To protect the bore.
Woolwich Store Charge, No. 19.		
Scotches, medium	As required	For scotching up the ends of piles of projectiles.

* Only to be used for sponges in transit, or where stores are damp, or when kept in the open.

Digitized by Google

Equipment of R.B.L. 7-in., 40-pr., and 20-pr. Guns—Armament of Works—*continued.*

TABLE 6—*continued.*	Proportions.	Remarks.
Woolwich Store Charge, No. 20.		
Bags, burster, R.B.L., common ...	1 per empty 7-inch and 40-pr. common shell	
Lubricators, service: 7-inch ... ... / 40-pr.	1 per round of ammunition	Issued separate with cartridges.
Woolwich Store Charge, No. 21.		
Bags, primer, filled, 7 drams ...	3 per empty 7-inch and 40-pr. common shell	One or more of these primers to be placed on the top of the bursting charge before the fuze or plug is inserted.
Cartridges, R.B.L., filled, serge: 7-inch (11-lb. / 10-lb.) / 40-pr., 5 lb. ... / 20-pr., 2½-lb....	1 per round of ammunition	All the cartridges in Royal Artillery charge will be kept filled, as far as store accommodation will admit. *See* paragraph 80.
Gunpowder: pistol, rifle pistol, F.G., R.F.G., or R F.G.[2] ... lb. / shell, P. and F.G.* lb.	Sufficient to fill shells supplied empty. *See* footnote *, p. 331.	For Shrapnel shells. / For common and segment shells.
Woolwich Store Charge, No. 22.		
Bits, vent, Armstrong...	1 to 4 guns with vent pieces per work	Removes irregularities in the vent.
Boxes, tube, garrison	1 per gun	For friction tubes.
Bursters, R.B.L., segment, filled, 20-pr.	1 per 20-pr. empty segment shell	
Cups, R.B.L. guns †: 40-pr., side closing ...	1 per round	
7-inch	1 per round	
20-pr.	... ...	With practice ammunition only.
40-pr.	... ...	With practice ammunition only.
Extractors, tin cup: cross-head	1 per 40-pr. side closing gun	
hook	1 per gun, except 40-pr. side closing	Only for practice guns in the case of 40-pr.

		Land Fronts (per 100 rounds).	Sea Fronts (per 100 rounds).	
Fuzes ‡: percussion §: B.L., plain, No. 2 ...		90	90	20-pr. only.
percussion §: direct action, No. 3‖ ...		90	90	7-inch.
percussion §: R.L., No. 7		90	90	40-pr. only.
time: Armstrong, E, No. 22		30	30	20-pr. only.
time: 15 seconds, with detonator, No. 43 ...		20	20	7-inch and 40-pr.

* Shell L.G. for 20-pr., R.B.L.

† For practice, cups are supplied at the rate of 1 per 10 rounds, *or less*, according to requirements for 7-inch, and 1 per 5 rounds for 40-pr., 40-pr. side closing, and 20-pr.

‡ In cylinders of 5 each, except time, Armstrong, E, No. 22, which are issued in cylinders of 1 each. The designation number is shown on the label of the cylinder or other package in which the fuze is packed. The number stamped on the fuze itself denotes the number of the thousand manufactured.

§ The 7-inch and 40-pr. will be supplied with direct-action fuzes as the present equipment of G.S. and R.L. fuzes becomes used up.

‖ Mark III for sea fronts, and Mark I* and II for land fronts.

57
St. Lucia
481
75
7
5671
38107
Militia
247
75
7
5285

Digitized by Google

Equipmint of R.B.L. 7-in., 40-pr., and 20-pr. Guns—Armament of Works—*continued.*

TABLE 6—*continued.*

	Proportions.	Remarks.
Woolwich Store Charge, No. 22—continued.		
Implements, fuze and shell: Bits, hookborer	6 per gun.	
Cylinders, common	1 ,, ,,	
Handles, hookborer	1 ,, ,,	
Hooks, hookborer	1 ,, ,,	
Keys, fuze, universal*	1 ,, ,, ...	2 per gun required when the Mark III direct action fuzes are used.
Lanyards friction tube: field	3 per 20-pr. gun on field carriages.	
garrison No. 2 ...	3 per gun on Moncrieff carriages.	
garrison No. 3 ...	3 per gun on sliding and common carriages.	
siege, No. 1	3 per 40-pr. gun on siege carriages.	
Plugs, wood, covered with serge ...	1 per 20 pr. segment shell.	
Pockets: tin cup	1 per gun	Only for practice guns in the case of 40-prs. with vent pieces. For tin cups.
tube, land service ...	1 per gun, except 40-pr. side closing and 20-pr.	For vent piece primers.
Primers, vent piece	1 per round of ammunition, 7-inch and 40-prs. only, except 40-pr., side closing.	Supplied in cylinders containing 25.
Straps, tube box, long	1 per tube pocket 1 ,, tin cup pocket 1 ,, tube box	
Tubes, friction, copper: solid drawn	1 per round, except for 40-pr. side closing	Issued in cylinders containing 25.
solid drawn, with ball ...	1 per round for 40-pr. side closing.	
Woolwich Store Charge, No. 24.		
Bearers, shot, R.B.L., 7-inch ...	2 per 7-inch gun	For carrying projectiles.
Gauges, shell, ring, R.B.L.: 7-inch, 40-pr., 20-pr.	1 per battery for each calibre	For gauging the bases of the projectiles.
Plugs, fuze-hole: G.S., without loops	1 per 7-inch and 40-pr. shell	
R.B.L.	1 per 20-pr. shell	
Shells, R.B.L., filled†: common 7-inch	60 per cent.	
common 40-pr.		
common 20-pr.		
segment 7-inch	30 per cent.	
segment 40-pr.		
segment 20-pr.		
Shot, R.B.L., case 7-inch	10 per cent.	
case 40-pr.		
case 20-pr.		
Wads: fuze-hole, G.S.	1 per empty shell, 7-inch and 40-pr.	
R.B.L. sockets	1 per empty common shell, 20-pr. only	

38407
Equip.
1457
...
1533

* Keys, fuze and plug G.S., on charge, will continue to be used until worn out

† Supplied with fuze-hole plugs which, however, are separately shown, and are to be separately charged and accounted for.

Digitized by Google

Equipment of R.B.L. 7-in., 40-pr., and 20-pr. Guns—Armament of Works—*continued.*

TABLE 6—*continued.*	Proportions.	Remarks.
Woolwich Store Charge, No. 25.		
Lamps, fighting*	2 per casemate.	
Woolwich Store Charge, No. 27.		
Flags, red, 12 feet × 6 feet	1 for each practice battery	*See* paragraph 107.
Woolwich Store Charge, No. 29.		
Tapes, measuring 50 feet	1 per sub-district ...	For measuring cordage, &c.

57
Gibraltar
5740
57
Portsmouth
2800
38407
Equip.
1476

* Oil and wick for these are supplied by Army Service Corps, as required.

Digitized by Google

EQUIPMENT OF R.M.L. HOWITZERS, 8-INCH, 70 AND 46-CWT., 6·6-INCH, AND 6·3-INCH.

Armament of Works.

TABLE 7.	Proportions.	Remarks.
Woolwich Store Charge, No. 2.		
Colours, camp	2 per howitzer	For laying out the line of fire.
Horns, powder*	1 per battery for all ordnance	For priming guns if required.
Woolwich Store Charge, No. 4.		
Carts. trench	1 per sub-district ...	For moving projectiles.
Drugs, gun, 5 tons	1 per district	Suitable for all ordnance up to 5 tons.
Limbers, sling wagon, 6 tons ...	1 per district if necessary	Available also for 80-pr. and 64-pr. R.M.L., R.B.L., and S.B. ordnance.
Wagons, sling, 6 tons...		
Woolwich Store Charge, No. 5.		
Brushes, water, carriage	2 per howitzer	1 for cleaning the sponge, and 1 for projectiles in emplacement.
Woolwich Store Charge, No. 7.		
Chests, tool, filled No. 3 D	As authorised by para. 201	For repair of carriages, &c.
,, 3 E	1 per district	
,, 11 A	1 per work	
Boards, range	1 per two guns of same nature, or 1 per gun where mounted singly	To be prepared locally.†
Cans, oil, lubricating, smiths‡ ...	1 per 6 howitzers or less, fitted with hydraulic buffers	Globular can, with fine spout.
Hammers, claw, 28-oz.	2 per battery for all ordnance	For general use.
Woolwich Store Charge, No. 8.		
Plummets, howitzer§...	1 per howitzer	For laying.
Spanners, McMahon, 15-inch ...	1 per battery for all ordnance	For tightening nuts, &c.
TOOLS, ORDNANCE.		
Tools, examining, painting and lacquering rifled ordnance ... sets	1 per district	For detail of tools, *see* pages 140 to 145.

57
D'port.
5104

* Contains 1½ lb. of gunpowder.

† The fuze scale is either painted on the board, or printed on paper and attached to the board.

‡ When these cans become unserviceable they will be replaced by "Can lubricating, No. 9."

§ When existing stock is used up, plummets laying will be issued.

Digitized by Google

Equipment of R.M.L. Howitzers, 8-in., 70 and 46-cwt., 6·6-in., and 6·3-in.—Armament of Works—*continued.*

TABLE 7—*continued.*

		Proportions.	Remarks.
	Woolwich Store Charge, No. 10.		
	Chests, tool, empty, venting, siege train (with tools shown in Appendix VIII.)	... ...	For R.M.L. and S.B. ordnance. *See* pages 238 to 245.
	Jacks, lifting, screw, Clerk's ...	per work	For general use.
	Plates, wheel, platform, siege sets	1 per double-decked platform.	
	Woolwich Store Charge, No. 11.		
	Chalk, white ... ... lb.	2 per howitzer	Annual supply.
	Oil, mineral ... ... gallons	Sufficient to fill the hydraulic buffer	Directions for filling are on a brass plate attached to the buffer.
	Woolwich Store Charge, No. 13.		
	Forges, field, R.A., Mark IV ...	As authorised. *See* paragraph 201.	
	Woolwich Store Charge, No. 14.		
57 Portsmouth 1834	**Axletrees,** transporting, bed, howitzer, R.M.L.	1 per work, with howitzer beds	*See* Limbers and Wheels.
	Barrows, projectile, No. 11	1 per 8-inch howitzer ...	For service at the guns.
	Beds, howitzer, R.M.L.* 8-inch ...	1 per 8-inch 46-cwt. howitzer	Where howitzers are not mounted on carriages.
	Beds, howitzer, R.M.L.* 6·6-inch ...	1 per 6·6-inch howitzer...	Where howitzers are not mounted on carriages.
	Beds, howitzer, R.M.L.* 6·3-inch ...	1 per 6·3-inch ,, ...	Where howitzers are not mounted on carriages.
	Buckets, sponge, garrison	1 per howitzer	To hold water for damping the sponge.
57 D'port. 5199	**Carriages,** siege, R.M.L. 8-inch 70-cwt. howitzer	1 per howitzer ...	Where howitzers are not mounted on beds. For component and spare parts, *see* pages 620 to 641.
	Carriages, siege, R.M.L. 8-inch 46-cwt. howitzer	1 per howitzer ...	Where howitzers are not mounted on beds. For component and spare parts, *see* pages 620 to 641.
	Carriages, siege, R.M.L. 6·6-inch howitzer ...	1 per howitzer ...	Where howitzers are not mounted on beds. For component and spare parts, *see* pages 620 to 641.
	Carriages, siege, R.M.L. 6·3-inch ,, ...	1 per howitzer ...	Where howitzers are not mounted on beds. For component and spare parts, *see* pages 620 to 641.
	Drivers, screw, No. 1	2 per double-decked platform.	For use when laying double-decked platforms.
	Gyns, triangle, with appurtenances, light	1 per sub-district, or 2 if more than 3 works (in exceptional positions); if more are considered necessary, they must be specially applied for	Available for all ordnance of 7 tons and under. For complete set of stores *see* note †, page 323.
	Handspikes, common, 6 feet ...	5 per carriage. 2 per bed.	
	Levers, iron-shod, crow, 7 feet ...	1 per work for all ordnance	Fordrawing bolts, &c.
	Limbers siege, R.M.L. howitzer, L.S. armaments 8-inch 70-cwt.	1 per howitzer.	
	Limbers siege, R.M.L. howitzer, L.S. armaments 8-inch 46-cwt.	1 per howitzer.	
	Limbers siege, R.M.L. howitzer, L.S. armaments 6·6-inch	1 per howitzer.	
	Limbers siege, R.M.L. howitzer, L.S. armaments 6·3-inch	1 per howitzer.	
	Limbers transporting, bed, howitzer, R.M.L.	1 per work with howitzer beds	*See* Axletrees.

* These can be transported by means of the axletree, limber, and wheels.

Digitized by Google

Equipment of R.M.L. Howitzers, 8-in., 70 and 46-cwt., 6·6-in., and 6·3-in.—Armament of Works—*continued.*

TABLE 7—*continued.*	Proportions.	Remarks.
Woolwich Store Charge, No. 14—continued.		
Measures, hydraulic buffer, filling...	1 per work where required	For filling the hydraulic buffer.
Planks, trail, siege	1 per double-decked platform.	
Plates, pivot, double-decked platform	1 per double-decked platform	With under plates and bolts.
Platforms, ground, R.M.L., howitzer bed (*a*)	1 per howitzer bed.	
Platforms, siege, double-decked, "C" pivot* (*a*)	1 per howitzer, with hydraulic buffer.	
Plugs, pivot, No. 17	1 per double-decked platform.	
Spanners, hydraulic buffer	... ...	*See* Appendix XI, page 278.
Swingletrees, No. 1	3 per howitzer.	
Wagons, platform, gun, R.M.L., 6·6 inch	1 per district	Suitable for stores and 8-inch howitzer.
Wheels, 1st class B, No. 6	2 per work with howitzer beds	For transporting R.M.L., howitzer beds. (*See* Axletrees.)
Wrenches, forked, platform, wood, siege, ground	1 per work with howitzer beds.	For use with the siege platforms.
Wrenches, pivot, No. 4	1 per battery.	
Woolwich Store Charge, No. 16.		
Plugs, vent	1 per howitzer	To protect the vent at home stations and in cold climates.†
Spikes, gun, common	2 per howitzer	For spiking vents permanently.
Spikes, gun, spring, C *or* D‡... ...	1 per howitzer where required.	For spiking vents temporarily.
Vent-servers§...	2 per howitzer	To place in the vent while loading; also for plugging the vents of guns mounted in warm climates, the lanyard being removed for this purpose.
Wrenches, sight, S.B....	1 per 10 or less 8 inch 46 cwt., or 6·3 inch howitzers when centre-sighted per work	For fixing or removing the muzzle sights.

* **Guides,** wheel, central pivot, howitzer 1
Plates trail ... ... 1 } Specially allowed for Hong Kong.
Plates wheel, platform siege ... ... 2 }
Plugs, pivot, No. 13 1

(*a*) To be kept in Ordnance Store, or Royal Artillery charge for Army Ordnance Department, as best suits the requirements of each locality. To be demanded and laid for Service by Royal Engineers, but, for instructional purposes of Royal Artillery, may be drawn and laid by them. Per compart 2024

† At Halifax the vents will be secured by tow steeped in Field's grease and capped with putty.

‡ Only to be demanded for howitzers in advanced or exposed works.

§ Whipcord should be demanded separately for making the lanyards.

Digitized by Google

Equipment of R.M.L. Howitzers, 8-in., 70 and 46-cwt., 6·6-in., and 6·3-inch—Armament of Works—*continued.*

TABLE 7—*continued.*

	Proportions.	Remarks.
Woolwich Store Charge, No. 17.		
Ordnance, R.M.L. 8-inch howitzer 70-cwt. / 46-cwt.; 6·6 inch howitzer; 6·3-inch "	As authorised	For fittings, special implements and appurtenances, *see* pages 466 to 471.
Prickers, vent, 12 inch	1 per howitzer	To clear the vent.
Punches, vent 12-inch	1 per 8-inch 46-cwt. howitzer.	
8-inch	1 per howitzer, except 8-in. 46-cwt.	
Woolwich Store Charge, No. 18.		
Bags, extractor, projectile, 9-inch ...	1 per extractor	To cover the head.
Brushes, piasaba, R.M.L. 8-inch 70-cwt. howitzer / 46-cwt. "; 6·6-inch ... ...; 6·3-inch howitzer ...	1 per battery for each nature from which practice is carried on	For cleaning out the grooves.
Caps, sponge* No. 8 ... ...; " 9 ... ...; " 10	6·3-inch, 6·6-inch, 8-inch: 1 per sponge, where necessary	To protect sponge head.
Cases, cartridge No. 2 ... ...; " 4	8-inch ... ...; 6·6-inch and 6·3-inch...: 2 per howitzer	To bring up filled cartridges.
Extractors, projectile, R.M.L. 8-inch gun ... ...; 8-inch 46-cwt. howitzer; 6·6-inch howitzer ...; 6·3-inch " ...	... ...; 1 per battery for each nature of howitzer	For the 8-inch 70-cwt howitzer.
Rammers, R.M.L. 8-inch howitzer 70-cwt. ... / 46-cwt. ...; 6·6-inch howitzer ...	1 per howitzer.†	
Ropes, drag, heavy ... ... pairs	2 per work for all ordnance.	
Sponges, R.M.L. 8-inch 70-cwt. howitzer / 46-cwt. "; 6·6-inch howitzer... "; 6·3-inch howitzer... ...	1 per howitzer.	
Tackles, luff, 14 fathoms	2 per two 8-in. howitzers, 2 per work for 6·6-inch and 6·3-inch howitzers.	
Tampeons, R.M.L. 8-inch 70-cwt. howitzer / 46-cwt. "; 6·6-inch ... ...; 6·3-inch howitzer ...	1 per howitzer	To protect the bore.
Wadhooks, R.M.L., 8-inch 70-cwt. ... ... / 46-cwt.	1 per three 8-inch howitzers, 70-cwt. per work‡; 1 per three howitzers 8-inch 46-cwt. 6·6-inch or 6·3-inch per work	For drawing the charge and searching the bore.
Woolwich Store Charge, No. 20.		
Bags, bursters, R.M.L, common ...	1 per empty common shell	

* Only to be used for guns in transit or where stores are damp, or when kept in the open.

† Rammers for 6·3-inch howitzers are on the sponge staves.

‡ If additional wadhooks are required for drill they must be collected from other howitzers

Digitized by Google

Equipment of R.M.L. Howitzers, 8-in., 70 and 46-cwt., 6·6-in., and 6·3-inch—Armament of Works—*continued.*

TABLE 7—*continued.*

	Proportions.	Remarks.
Woolwich Store Charge, No. 21.		
Cartridges, R.M.L., filled — silk cloth — 8-inch — 11½ lb. R.L.G.[2]	(70 cwt.)	All cartridges in Royal Artillery charge will be kept filled as far as store accommodation will admit. *See* paragraph 80. An equal number of each charge per howitzer will be maintained.
10 ,, ,,	(46 ,,)	
7 ,, ,,	(70 ,,)	
5 ,, ,,	(46 ,,)	
3½ ,, ,,	(70 ,,) 1 per round of ammunition	
2½ ,, ,,	(46 ,,)	
6·6-inch — 5 ,, ,,	... ...	
3 ,, ,,	... ...	
2 ,, ,,	... ...	
6·3-inch* — 4½ lb. R.L.G.	... ...	
2½ ,, ,, ...	... ...	
Gunpowder — R.L.G. *or* R.L.G.[2] lbs.	As required ...	Bursters, Shrapnel shells, and powder horns.
R.F.G. *or* R.F.G.[2] ,,		
shell P. and F.G. ,,		Bursters, common shells.
Woolwich Store Charge, No. 22.		
Boxes, tube, garrison	1 per howitzer	For copper friction tubes
Fuzes† — percussion, direct-action — No. 3‡	1 per common shell.	
delay, No. 10	50 per cent. for common shell	For high angle fire.
time — sensitive§ — long, No. 23 / middle, No. 24	50 per cent. of each for Shrapnel shell.	
15 seconds, M.L. special, priming, No. 42	1 per star shell.	
Implements, fuze and shell — Bits, hook-borer ...	6 per howitzer.	
Cylinders, common...	1 ,, ,,	
Handles, hook-borer	1 ,, ,,	
Hooks, hook-borer...	1 ,, ,,	
Keys, fuze and plug, G.S.‖	2 ,, ,, ...	The second key required when Mark III direct-action fuzes are used.
Lanyards, friction tube, siege, No. 1	3 per howitzer.	
Primers, Shrapnel shell	1 per empty Shrapnel shell	In cylinders of 10 each.
Straps, tube box, long...	1 per tube box.	
Tubes, friction, copper, solid drawn with ball	1 per round	Issued in cylinders containing 25 each.
Woolwich Store Charge, No. 24.		
Bearers, shot, R.M.L. — 8-inch howitzer ...	1 per 8-inch howitzer ...	For carrying projectiles.
6·6-inch ,, ...	1 per 6·6-inch howitzer...	
Gaschecks, R.M.L. — 8-inch howitzer — 70 cwt. ...	1 per shell	For fixing to the base of the projectile.
46 ,, ...		
6·6-inch		
6·3-inch		

* Existing charges of 4-lb. and 2-lb R.L.G.[2], serge or silk cloth will be used up.

† The designation number is shown on the label of the cylinder or other package in which the fuze is packed. The number stamped on the fuze itself denotes the number of the thousand manufactured.

‡ Mark III for sea fronts, and Mark I* and II for land fronts.

§ The 15 seconds with detonators, at present on charge with each piece, will be retained and used up.

‖ Will be replaced by the "Key, fuze, universal," as the present store becomes used up.

38407 Equipment 1467

75 7 5285

Digitized by Google

Equipment of R.M.L. Howitzers, 8-in., 70 and 46-cwt., 6·6-in., and 6·3-inch—Armament of Works—*continued.*

TABLE 7—*continued.*	Proportions.	Remarks.
Woolwich Store Charge, No. 24—continued.		
Gauges, shell ring, R.M.L. — body and gas checks: 8-inch howitzer, 70-cwt.	1 per district for each calibre.	
Gauges, shell ring, R.M.L. — body and gas checks: 6·6-inch ...	1 per district for each calibre.	
Gauges, shell ring, R.M.L. — body and gas checks: 6·3-inch ...	1 per district for each calibre.	
Gauges, shell ring, R.M.L. — body and studs, 8-inch howitzer, 46 cwt.	1 per district for each calibre.	
Gauges, shell ring, R.M.L. — low over studs, 8-inch	1 per district for each calibre.	
Plugs, fuze-hole, G.S., without loop	1 per shell.	
Shells, R.M.L., filled* — common: 8-inch howitzer 70-cwt.	60	Per 100 rounds.†
Shells, R.M.L., filled* — common: 8-inch howitzer 46-cwt.	60	Per 100 rounds.†
Shells, R.M.L., filled* — common: 6·6-inch	60	Per 100 rounds.†
Shells, R.M.L., filled* — common: 6·3-inch howitzer	80	Per 100 rounds.†
Shells, R.M.L., filled* — Shrapnel: 8-inch ,,	30	Per 100 rounds.†
Shells, R.M.L., filled* — Shrapnel: 6·6-inch ,,	30	Per 100 rounds.†
Shells, R.M.L., filled* — star ...: 8-inch ,,	10	Per 100 rounds.†
Shells, R.M.L., filled* — star ...: 6·6-inch ,,	10	Per 100 rounds.†
Shells, R.M.L., filled* — star ...: 6·3-inch ,,	10	Per 100 rounds.†
Shot, R.M.L., case, 80-pr. (for 6·3-in.)	10 per 100 rounds.	
Wads, fuze-hole, G.S.	1 per empty common shell.	
Woolwich Store Charge, No. 29.		
57 Cork 4063 **Clinometers,** large‡	1 per howitzer	For giving quadrant elevation and measuring vertical angles.

* Supplied with fuze-hole plugs, which, however, are separately shown, and are to be separately charged and accounted for.

† All shells in R.A. charge will be kept filled as far as store accommodation will admit. 38407

‡ Stations having "Clinometer, Watkin," will retain them in use until they become unserviceable, when they will be replaced by the "Clinometer, large." Equip. 1476

Digitized by Google

EQUIPMENT OF S.B. CAST-IRON GUNS, HOWITZERS, AND CARRONADES (INCLUDING S.B. B.L. 32-PR. GUNS).

ARMAMENTS OF WORKS.

The following Table is intended to guide the equipments of these classes of ordnance, on the assumption that the M.L. guns command the approaches to works both by land and sea, while howitzers, carronades, and S.B. B.L. 32-pr. guns are, as a rule, confined to flanking defences.

TABLE S.	Proportions.	Remarks.
Woolwich Store Charge, No. 2.		
Horns, powder*	1 per battery for all ordnance	For priming guns, if required.
Woolwich Store Charge, No. 4.		
Carts, trench	1 per sub-district ...	For moving projectiles.
Drugs, gun, 5 tons	1 per district	Suitable for all ordnance up to 5 tons. *See* note §, page 320.
Limbers, sling wagon, 6 tons ...	1 per district if necessary	Available for all light ordnance. *See* note §, page 320.
Wagons, sling, 6 tons...		
Woolwich Store Charge, No. 5.		
Cartouches, leather	1 per 4 guns when employed for salutes	For supplying the guns with cartridges.
Woolwich Store Charge, No. 7.		
Boards, range	According to position ...	These will be issued blank and prepared by the O.C. R.A., the necessary materials being suppled by O.S.D.
Hammers, claw, 28-oz.	2 per battery for all ordnance.	
Woolwich Store Charge, No. 8.		
Spanners, McMahon, 15-inch ...	1 per battery for all ordnance	For tightening nuts.
Wrenches, knock up, G.S.	1 per work, 2 if over 10 slides	For tightening nuts, &c. Available for all natures of traversing slides.
TOOLS, ORDNANCE.		
Tools. cleaning, examining and painting ordnance	1 set per district ...	For detail of tools, *see* Table B, pages 146–147.

* Contains 1½ lbs of gunpowder, included in proportions at page 363.

57
D'port.
5104

Digitized by Google

Equipment of S.B. Cast-iron Guns, Howitzers, and Carronades (including S.B. B.L. 32-pr. Guns)—Armament of Works—*continued.*

TABLE 8—*continued.*	Proportions.	Remarks.
Woolwich Store Charge, No. 10.		
Chests, tool, empty, venting, siege train. (With tools shown in Appendix VIII, pages 238 to 245).	*See* paragraph 201 ...	For M.L. ordnance (rifled and S.B.).
Linstocks	1 per battery for all ordnance	To hold lighted slow-match.
Woolwich Store Charge, No. 11.		
Chalk, white ... ... lbs.	2 per piece	Annual supply.
Oil, minera ... ... gallons	Sufficient to fill the hydraulic buffer.	
Woolwich Store Charge, No. 13.		
Clippers, portfire	1 per battery for all ordnance	To cut lighted portfires.
Sticks, portfire	2 per battery for all ordnance	To hold lighted portfires.
Woolwich Store Charge, No. 14.		
Axletrees, transporting slide, L., medium, wood	1 for each district or group of sub-districts (such as Isle of Wight or Portland), where required, and roads are suitable	A further supply will be allowed, when necessary, on special representation. These articles, as well as their limbers and wheels, are available also for the 80- or 64-pr. M.L. and 7-inch or 40-pr. B.L. guns.
Buckets, sponge, garrison	1 per 2 pieces	To hold water for damping the sponge.
Carriages, garrison — S.B. — 68-pr.	1 per piece, according to description of mounting approved	Casemate, common, rear chock, dwarf, and sliding medium.
Carriages, garrison — S.B. — 8-inch gun and howitzer ...	1 per piece, according to description of mounting approved	Casemate, common, rear chock, dwarf, and sliding medium.
Carriages, garrison — S.B. — 32-pr. gun and 24-pr. carronade	1 per piece, according to description of mounting approved	Casemate, common, rear chock, dwarf, and sliding medium.
Carriages, garrison — sliding — No. 6 (S.B. B.L. 32-pr.)	1 per piece, according to description of mounting approved	For component and spare parts, *see* pages 620 to 641.
Carriages, garrison — sliding — Nos. 21 to 24	1 per piece, according to description of mounting approved	For component and spare parts, *see* pages 620 to 641.
Carriages, garrison — medium — Nos. 21 to 24	1 per piece, according to description of mounting approved	For component and spare parts, *see* pages 620 to 641.
Compressors, land service* — R.M.L. 64 pr. 71 cwt. (for S.B. 68-pr.)	As required	For 68-pr. and 8-inch 54-cwt. guns.
Compressors, land service* — S.B. 8-inch 54 cwt....	As required	For 68-pr. and 8-inch 54-cwt. guns.
Gyns, triangle, with appurtenances, light	1 per sub-district, or 2 if more than 3 works. (In exceptional positions, if more are considered necessary they must be specially applied for)	Available for all ordnance of 7 tons and under. For complete set of stores, *see* note †, page 323.

* These will be kept in Royal Artillery Store when not in use.

Digitized by Google

Equipment of S.B. Cast-iron Guns, Howitzers, and Carronades (including S.B. B.L. 32-pr. Guns)—Armament of Works—*continued.*

TABLE S—*continued.*	Proportions.	Remarks.
Woolwich Store Charge, No. 14—continued.		
Handspikes, common, 7 feet or 6 feet	5 with a common carriage 2 with a sliding rear chock or carronade carriage	7 feet handspikes are used with guns over 80 cwt., and all guns on rear chock carriages.
Handspikes, metal roller, 7 feet, L.S.	2 with a sliding carriage	For running up the gun.
Handspikes, wood roller, 6 feet ...	1 with a rear chock carriage	For running up the gun.
Levers, iron shod, crow, 7 feet	1 per work for all ordnance	To draw bolts out of slides, &c.
Levers, iron shod, slide, L, 4 feet ...	2 per slide	For traversing the slide.
Limbers, transporting, slide, L., medium	1 for each district or group of sub-districts (such as Isle of Wight or Portland) where required, and roads are suitable	*See* Axletrees.
Measures, hydraulic buffer, filling...	1 per work where required	For filling the hydraulic buffers.
Pedestals, carriage, garrison, common, R.M.L. 64-pr. 58 cwt.	1 per wood carriage and 1 per carriage medium No. 6	For S.B. 8-inch, 32- and 24-pr., and rear chock 8-inch howitzer.
Pedestals, carriage, garrison, sliding, dwarf, S.B. 18-pr.		S.B. B.L. 32-pr., and S.B. 8-inch and 32-pr.
Pedestals, carriage, medium, No. 6 ...		For S.B. 68-pr. 95 cwt.
Pedestals, carriage, medium, ,, 15 ...		For S.B. 8-inch casemate.
Pedestals, carriage, medium, ,, 20 ...		S.B. 68-pr. 95 cwt.
Pedestals, carriage, medium, ,, 22 ...		S.B. 8-inch 65 cwt. or 66 cwt., 32-pr. 58 cwt. or 56 cwt., sliding 32-pr. 63 cwt., 24-pr. and rear chock 8-inch.
Pedestals, carriage, medium, ,, 23 ...		
Slides, L, medium, No. 6 (S.B. B.L. 32-pr.)	1 per medium carriage, No. 6	For component and spare parts, *see* pages 654 to 663.
Slides, L, medium, No. 14	1 per casemate carriage	
Slides, L, medium, ,, 17	1 per dwarf carriage ..	
Spanners, hydraulic buffer	... ...	*See* Appendix XI, page 278.
Wheels, transporting, No. 86 ...	1 pair for each district or group of sub-districts (such as Isle of Wight or Portland), where required, and roads are suitable	*See* Axletrees.
Wrenches, forked, slide, L, wood, medium	1 per sub-district ...	For altering the flanges, &c., suitable also for all wood traversing slides.
Woolwich Store Charge, No. 16.		
Aprons, vent, large	1 per howitzer	Protects vent and tangent scale in transport.

38407
Equip.
1429

Digitized by Google

Equipment of S.B. Cast-iron Guns, Howitzers, and Carronades (including S.B. B.L. 32-pr. Guns)—Armament of Works—*continued.*

TABLE 8—*continued.*	Proportions.	Remarks.
Woolwich Store Charge, No. 16.		
Ordnance, S.B.* — carronades, 24- and 12-pr.; guns: 8-inch ...; 68-, 32-, and 24-pr.; howitzers, 8-inch	As authorised	
Plugs, vent	1 per piece	To protect the vent at Home Stations, and in cold climates.†
Scales, tangent, wood, S.B. gun, 8-inch, 68-, 32-, and 24-pr.	1 per gun	
Sights‡ S.B., fore and hind — carronade, 24- and 12-pr.	1 fore and 1 hind per carronade	
Sights‡ S.B., fore and hind — gun, 8-inch, 68-, 32-, and 24-pr.	1 fore and 1 hind per gun	
Sights‡ S.B., fore and hind — howitzer, 8-inch	1 fore and 1 hind per howitzer	
Spikes, gun — common...	2 per piece, except S.B. B.L. 32-pr.	To spike vents permanently.
Spikes, gun — spring B	1 per piece when required,§ except S.B. B.L. 32 pr.	To spike vents temporarily.
Spikes, gun — spring C		
Spikes, gun — spring D		
Vent-servers ‖...	1 per piece (except S.B. B.L. 32-pr.)	To place in vent while loading, also for plugging the vents of guns mounted in warm climates; the lanyard being removed for this purpose.
Wrenches, sight, S.B.	1 per 10 guns or howitzers per work.	For screws of sights, pin friction tube, and lanyard guides.
Woolwich Store Charge, No, 17.		
Ordnance, S.B. B.L. 32-pr.	As authorised	For fittings and special implements, *see* pages 472 to 475.
Prickers, vent, 12-inch	1 per piece	To clear the vent.
Sights‡, S.B. B.L. 32-pr.	1 per gun.	
Woolwich Store Charge, No. 18.		
Caps, sponge, Nos. 5, 7, 8, and 10¶ ...	1 per sponge where necessary.	To protect sponge head.
Cases, cartridge, Nos. 1 to 6	2 per piece	To bring filled cartridges to the piece in action.

* With the following fittings and sights, which are, however, separately shown, and are to be separately charged and accounted for:—With (*guns*): Sights, 1 fore and 1 hind, each with 2 fixing screws and lead packing, and 1 scale, tangent, wood; (*howitzers*): Sights, 1 fore and 1 hind, and 1 set screw; (*carronades*): Sights, 1 hind, with 2 fixing screws and lead packing, and 2 preserving screws, and 1 fore.

† At Halifax the vents will be secured by tow steeped in Field's grease and capped with putty.

‡ Screws, preserving, will be placed in all fixing screw and other holes in the guns when the sights, &c., are removed for storage or transport.

§ Spring spikes are to be demanded only for pieces in advanced or exposed works.

‖ Whipcord should be demanded separately for making the lanyards.

¶ Only to be used for sponges in transit, or where stores are damp.

Digitized by Google

Equipment of S.B. Cast-iron Guns, Howitzers, and Carronades (including S.B. B.L. 32-pr. Guns)—Armament of Works—*continued.*

TABLE 8—*continued.*	Proportions.	Remarks.
Woolwich Store Charge, No. 18—continued.		
Covers, breech, S.B. B.L. 32-pr. ...	1 per 32-pr. S.B. B.L. gun.	
Rammers { S.B. B.L. 32-pr. ... / S.B. 8-inch and 68-pr. to 18-pr. }	1 per gun ...	Rammers for howitzers and carronades are on the sponge staves.
Ropes, drag, heavy ... ... pairs	2 per work for all ordnance	
Sponges { S.B. B.L. 32-pr. ... ... / S.B. { 8-inch gun and howitzer / 68- to 24-pr. ... } }	1 per piece	
Tackles { gun, 2½-inch tarred rope / luff, 14 fathoms ... ... }	2 per 2 or less slides	For 68-pr. guns. / For lighter pieces.
Tampeons* { S.B. B.L. 32-pr. muzzle / S.B. ... ... }	1 per S.B. B.L. 32-pr. gun / 1 per M.L. gun or howitzer	To protect the bore.
Wadhooks { carronade { 32-pr. (also 24-pr.) / 18-pr. (also 12-pr.) } / 8-inch howitzer ... / 8 ,, gun (also 68-pr. and 32-pr. 58 or 56 cwt.) / 32-pr. 50 cwt. (also 24-pr.) }	1 to every 3 pieces in a work, according to calibre,† except S.B. B.L. 32-pr.	For drawing charges, and searching the bore.
Wads, grummet, S.B.	According to circumstances‡	To prevent the projectile rolling out when the gun is depressed.
Woolwich Store Charge, No. 21.		
Cartridges { S.B. B.L., filled, silk cloth. 32-pr. / S.B., filled, serge (for ordnance as detailed on page 362) }	1 per round of ammunition	All to be kept filled in R.A. charge, *vide* paragraph 80. / 10 cartridges per piece, to be kept filled in R.A. charge, *vide* paragraph 82.
Gunpowder { pistol, rifle pistol, F.G., R.F.G., or R.F.G.[2] ... lbs. / shell L.G. ... ,, }	Sufficient to fill shells supplied empty. *See* footnote *, page 331	For bursters, diaphragm Shrapnel shells, and powder horns. / For bursters of common shells.
Woolwich Store Charge, No. 22.		
Boxes, tube, garrison	1 per piece	For copper friction tubes.

* A junk wad should be demanded for, and attached to each tampeon.

† And 6 spare to each district in which salutes are fired, for use of the saluting guns. If additional wadhooks are required for drill, the service wadhooks must be collected.

‡ The proportion depends on locality, and is left to the discretion of Officers Commanding R.A. In positions where guns would generally be fired with a slight elevation, the proportions required would be small; where guns are likely to be depressed, a grummet wad would be required for each solid shot, or plugged shell used as hollow shot.

Digitized by Google

Equipment of S.B. Cast-iron Guns, Howitzers, and Carronades (including S.B. B.L. 32-pr. Guns)—Armament of Works—*continued.*

TABLE 8—*continued.*

	Proportions.	Remarks.
Woolwich Store Charge, No. 22—continued.		
Fuzes* percussion, Pettman, land, No. 6	1 per 2 common shells ...	For common shells with "crossed" plugs.
Fuzes* time: common, No. 32 ...	1 to 2 common shells ...	In cylinders of 5 each.
Fuzes* time: diaphragm Shrapnel, No. 33	1 per diaphragm Shrapnel.	In cylinders of 5 each.
Implements, fuze and shell: Bits, hook-borer ...	6 per 2 pieces.	
Implements, fuze and shell: Cylinders, common...	1 per 2 pieces.	
Implements, fuze and shell: Handles, hook-borer	1 per 2 pieces.	
Implements, fuze and shell: Hooks, hook-borer ...	1 per 2 pieces.	
Implements, fuze and shell: Keys, fuze and plug, G.S.	1 per 2 pieces.	
Lanyards, friction tube, garrison, No. 3.	2 per piece	
Match quick ... ... lbs.	½ per work, in tin cylinder	For general purposes.
Match slow ... ... ,,	1 per 100 rounds... ...	For lighting portfires, &c.
Portfires, common	2 per 100 rounds ...	For general use.
Straps, tube box, long...	1 per tube box	
Tubes, friction, copper, solid drawn, with ball.	1 per round	Issued in cylinders containing 25.
Woolwich Store Charge, No. 24.		
Bearers, shot, S.B. 8-inch	1 per 68-pr. gun	To lift solid shot in loading
Bottoms, shell: conical ... ... / cylindrical ... / hemispherical ...	1 per shell according to nature	Elm for temperate and teak for tropical climates. Issued strung on iron rods holding 20.
Garlands, rectangular† 8-inch (also 68-pr.) ... / 32 and 24-pr.	According to circumstances	To hold (generally) a pile of 30 shot or shells.
Garlands, pins	4 per garland	Unite sides of garland at corners.
Gauges, shell, ring, S.B. 8-inch, 32-pr. to 12-pr.	1 high gauge per battery for each calibre	For gauging projectiles.
Plugs fuze-hole, common	1 per shell.	
Plugs loading hole (spare): large ...	5 per cent. on supply of diaphragm Shrapnel shell	Diaphragm Shrapnel, 24-pr. and above.
Plugs loading hole (spare): small ...	5 per cent. on supply of diaphragm Shrapnel shell	Diaphragm Shrapnel, 18-pr. and below.
Rivets, shell, common: large, above 18-pr. ... ... / small, 18-pr. and under ...	1 per bottom issued loose	For fixing wood bottoms to shells.
Shells, S.B., empty	... ...	See page 365.
Shot, S.B.	... ...	See page 365.
Wads fuze-hole, common ...	1 per common shell ...	For fuze-holes of empty shells.
Wads loading hole, diaphragm: 24-pr.	1 per diaphragm Shrapnel	Diaphragm Shrapnel, 24-pr. and above.
Wads loading hole, diaphragm: 18 ,,	1 per diaphragm Shrapnel	Diaphragm Shrapnel, 18-pr and below.

* The designation number is shown on the label of the cylinder or other package in which the fuze is packed. The number stamped on the fuze itself denotes the number of the thousand manufactured.

† Where it can be done, garlands should be made on the spot, of stone or rod iron, or where practicable, beds should be made for the piles with spherical projectiles half sunk in the ground.

Digitized by Google

Equipment of S.B. Cast-iron Guns, Howitzers, and Carronades (including S.B. B.L. 32-pr. Guns)—Armament of Works—*continued.*

TABLE 8—*continued.*	Proportions.	Remarks.
Woolwich Store Charge, No. 25.		
Cans, oil, feeding, 1-pint	1 per 6 pieces	
Lamps, fighting*	2 per casemate in which ordnance are mounted for flank defence	
Woolwich Store Charge, No. 27.		
Flags, red, 12 feet × 6 feet	1 for each practice battery	*See* paragraph 107.
Woolwich Store Charge, No. 29.		
Clinometers, large†	As required	For giving quadrant elevation and measuring vertical angles.

57
Cork
4063

TABLE 8—*continued.*	Land Fronts.		Sea Fronts.			Flanks.	32-pr. S.B.B.L. guns.		
	Guns, 8-inch.	Guns, 68-, 32- and 24-pr.	Guns, 8-inch.	Guns, 68-pr.	Guns, 32- and 24-pr.	8-inch Guns; 8-inch, Howitzers and all Carronades.	Home.	Abroad.	
Shells, S.B., empty‡ common, loose diaphragm	60	25	70	30	30	30	—	—	Per 100 rounds.
Shells, S.B., empty‡ Shrapnel	25	15	15	10	10	—	—	—	Per 100 rounds.
Shot, S.B. case and grape ..	15	10	15	10	15	70§	25§	50§	Per 100 rounds.
Shot, S.B. solid...	—	50	—	50	45	—	—	—	Per 100 rounds.

* Oil and wick for these are supplied by Army Service Corps, as required.

† Stations having "Clinometers, Watkin," will retain them in use until they become unserviceable, when they will be replaced by the "Clinometer, Large."

‡ Supplied with fuze-hole plugs, which, however, are separately shown, and are to be separately charged and accounted for.

§ Case shot only.

57
Gibraltar
5740
38407
Equipment
1476

Digitized by Google

EQUIPMENT OF Q.F. 4·7-INCH AND 12-PR. GUNS.

TABLE 9.	Proportions.	Remarks.
Woolwich Store Charge, No. 2.		
Bars, crow, 6-feet	1 per work	For general use.
Lamps, tracing*	2 per gun	For night firing.
Woolwich Store Charge, No. 4.		
Carts, trench	1 per sub-district ...	For moving projectiles.
57 D'port. 5104 **Drugs,** gun, 5-ton	1 per district, for 4·7-inch only.	For moving ordnance up to 5 tons.
Woolwich Store Charge, No. 5.		
Brushes, water, carriage	2 per gun	For cleaning purposes.
Woolwich Store Charge, No. 7.		
Chests, tool, filled { No. 3 D ...	As authorised by para. 201.	For repair of carriages, &c.
Chests, tool, filled { ,, 11 A ...	1 per work	For repair of carriages, &c.
Boards, range...	1 per 2 guns of same nature, or 1 per gun where mounted singly.	To be provided locally.
Drivers, screw, G.S., 24-inch **Hammers,** claw, 28 ozs. ...	1 per gun	For general use.
Woolwich Store Charge, No. 8.		
Spanners, Armament Artificers, double-ended { 1½-inch and 1⅜-inch; 1¼ ,, ,, 1⅛ ,,; 1 ,, ,, ⅞ ,,; ¾ ,, ,, ⅝ ,,; ½ ,, ,, ⅜ ,,	1 set per work ...	For adjusting and tightening up bolts and nuts.
Spanners, McMahon, 15-inch ...	1 per gun	For tightening nuts, &c.
TOOLS, ORDNANCE.		
Tools, cleaning, examining, painting, and lacquering Q.-F. ordnance ... ... sets	1 per district	For detail, *see* table A, pages 140 to 145.
Woolwich Store Charge, No. 10.		
Filters, hydraulic jack	1 per work, for 4·7-inch	For filling hydraulic jacks.
Frames, store, hydraulic jack ...	1 per work or per 4 jacks, for 4·7-inch	For keeping jacks under pressure.
57 Gen. No. 6433 **Jacks,** hydraulic, G.S., 10 tons	1 per work, for 4·7-inch	For general purposes.
57 Gibraltar 5740 lifting screw, Clerk's	2 per work ...	For general purposes.
Pad, frame, store hydraulic jack	1 per hydraulic lifting jack.	

* Oil and wick for these supplied by Army Service Corps, as required.

Digitized by Google

Equipment of Q.F. 4·7-inch and 12-pr. Guns—*continued.*

TABLE 9—*continued.*	Proportions.	Remarks.
Woolwich Store Charge, No. 11.		
Oil, mineral ... ...galls.	As required	For hydraulic buffers.
Woolwich Store Charge, No. 13.		
Cans, lubricating, No. 9	1 per gun	For lubricating purposes.
Woolwich Store Charge, No. 14.		
Battery, Le Clanché, firing, Q.F., cells	3 per gun.	
Buckets, sponge, garrison... ...	1 per gun	For general use.
Carriages, garrison, Q.F. { 4·7-inch ... / 12-pr. .. }	As authorised.	
Carriages, Q.F. { 4·7-inch eyes, lifting cradle / spanners and special implements }	1 per carriage.	*See* Appendix XI, pages 278 to 292.
Gyns, triangle, with appurtenances, light, tubular	1 per sub-district ...	For mounting ordnance, &c.
Handspikes, common, 6-feet ...	2 per gun.	
Measures, hydraulic buffer, filling	1 per work	For filling hydraulic buffers.
Plates, base, pedestal, Q.F., 12-pr.— Steel { anchoring ... ... / base ... ... }	1 per mounting.	
Bolts, holding down	6 per mounting.	
Woolwich Store Charge, No. 15.		
Boxes, grease, 3 lbs....	1 per 3 guns or less ...	For grease.
Woolwich Store Charge, No. 16.		
Ordnance, Q.F. { 4·7-inch ... / 12-pr. 12-cwt. A }	As authorised ..	For special implements and appurtenances, *see* pages 664 and 665.
Woolwich Store Charge, No. 18.		
Brushes, piasaba, Q.F.	1 per 2 guns per work.	
Canvas, packing, Hessian, 47-inch ... ...yards	$2\frac{1}{2}$ per gun	Annual supply. For use with piasaba brush for cleaning bores.
Covers { breech and shield, Q.F., 4·7-inch / gun and mountings, Q.F., 12-pr. }	1 per gun 1 per gun	
Keys, tampeon, small	1 per 2 or less number of guns, 4·7-inch.	Securing tampeon in gun.
Staves, end Q.F. { 4·7-inch ... ... / 12-pr. ... ... }	1 per piasaba brush.	
Tampeons, Q.F. { 4·7 inch ... ... / 12-pr. ... ... }	1 per gun.	
Woolwich Store Charge, No. 22.		
Fuzes, percussion { base, Armstrong, No. 9 / base, medium, No. 12 }	1 per common or A P. shell, 4·7-inch. 1 per common or A.P. shell, 12-pr.	

54
Art.
3025

54
Art.
3025
73
3
3695

Digitized by Google

Equipment of Q.F. 4·7-inch and 12-pr. Guns—*continued.*

TABLE 9—*continued.*	Proportions.	Remarks.
Woolwich Store Charge, No. 22—continued.		
Implements, keys, fuze, and plug — Armstrong	1 per 4·7-inch gun ...	For removing the base plug and inserting the fuze.
Implements, keys, fuze, and plug — universal	1 per 12-pr. gun ...	For removing the base plug and inserting the fuze.
Lanyards, Q.F., 12-pr., land service	3 per 12-pr. gun.	
Tubes, vent sealing* — percussion	100 per gun.	
Tubes, vent sealing* — percussion, drill ...	5 per gun, 4·7-inch	
Woolwich Store Charge, No. 23.		
Boxes, cartridge, Q.F. — 4·7-inch	51 per gun	50 for filled and 1 for empty cartridges.
Boxes, cartridge, Q.F. — 12-pr., 12-cwt. ...	41 ,, ,, ...	40 for filled, and 1 for empty cartridges.
Cartridges, Q.F. adapters	20 ,, ,, ...	For cartridges fired with V.S. percussion tubes.
Cartridges, Q.F. empty, service	6 ,, ,, ...	For testing electrical communications, &c.
Cartridges, Q.F. filled, service† — 4·7-inch	300 ,, ,, ...	In 50 boxes.
Cartridges, Q.F. filled, service† — 12-pr., 1lb. 15 ozs., cordite (size 15)	400 ,, ,,	
Cartridges, Q.F. plugs, primer hole	1 per empty cartridge.	
54 / 24 / 1822 **Cartridges, Q.F.** primers, electric, large ...	200 per sub-district (1 box)	For testing purposes in empty cartridges.
Implements, fuze and shell — clips, cartridge, Q.F., keys, primer, electric, Q.F. large — inserting primer, removing primer	1 per gun. / 1 per 2 guns or less.	
Plugs, base, shell, Q.F.	1 per shell.	
Shells, Q.F., filled‡§ — armour-piercing — 4·7-inch ...	60 per gun.	
Shells, Q.F., filled‡§ — armour-piercing — 12-pr. ...	100 ,, ,,	
Shells, Q.F., filled‡§ — common — 4·7-inch ...	240 ,, ,,	
Shells, Q.F., filled‡§ — common — 12-pr. ...	300 ,, ,,	
Woolwich Store Charge, No. 24.		
Gauges, shell ring, Q.F. — band — high ...	1 per work.	
Gauges, shell ring, Q.F. — band — low ...	1 per work.	
Gauges, shell ring, Q.F. — body	1 per work.	
Woolwich Store Charge, No. 25.		
57 / Gibraltar / 5740 **Lamps,** fighting‖	2 per gun.	
Woolwich Store Charge, No. 29.		
Stands, telescope, 2½-inch socket...	1 per telescope.	
Telescopes, 3-feet	1 per work.	

* After being fired the tubes will be returned to store, and forwarded to Woolwich as old metal.

† Empty cases are always to be cleaned as soon as possible after firing. *See* paragraph 412, Magazine Regulations, 1894.

75 / 12 / 4221 / 57 The cases, when dry, are to be repacked in the boxes in which they were supplied, and returned to store. The fired cases are not, on any account, to be repacked in boxes containing unfired cartridges.

Gen. No. / 5224 / 57 / Gibraltar / 5740 ‡ Supplied with base plugs, which however are separately shown, and are to be separately charged and accounted for.

§ The proportions of projectiles here laid down will be maintained for the total number of each nature of gun in a district, and will be subject to the same conditions as laid down on page 303 for B.L. guns.

‖ Oil and wick for these are supplied by Army Service Corps, as required.

Digitized by Google

57
Gen. No.
2599

EQUIPMENT OF HOTCHKISS, Q.F., 6-PR. GUN, MARK I, ON ELASTIC FRAME STAND.

TABLE 10.	Proportions.	Components.	Spare.		Remarks.
			Per gun.	To number of guns or less per work.	
Woolwich Store Charge, No. 14.					
Pivots and Sockets, Q.F., 6-pr. Hotchkiss (Mark I)	As authorised	...	...	...	
Pivot—*					
Capsquare, metal { left	...	1	...	...	
Capsquare, metal { right	...	1	...	...	
Levers, steel, clamping screw, capsquare	...	1	...	1 to 5	
Pivots, metal	...	1	...	...	
Screws, steel { capsquare ...	...	3	1	...	
Screws, steel { clamping capsquare	...	1	...	1 to 5	
Screws, steel { holding down pivot with washer	...	1	...	1 to 5	
Washers, steel, friction ...	...	1	...	...	
Wedges, steel, for shield, with set screw { left ...	...	1	...	1 to 5	
Wedges, steel, for shield, with set screw { right	...	1	...	1 to 5	
Shield—					
Pins, steel, stay, supporting, with collar and split key	...	2	...	...	
Shield, steel, without fittings	...	1	...	...	
Stays, steel, supporting shield, with collars and nuts	...	2	...	...	
Sockets, metal	...	1	...	...	
Plates, base, elastic stand, Q.F., 6-pr.	As authorised	...	...	...	
Plates, steel { anchoring ...	...	1	...	...	
Plates, steel { base	...	1	...	...	
Bolts, holding down	...	10	...	...	
Stand, elastic frame, Q.F., 6-pr. (Mark I)	As authorised	...	...	...	
Bolts, hexagon head, with nuts	...	10	...	...	
Screws { hexagon head ...	...	8	...	...	
Screws { holding down socket	...	2	...	...	
Stand, iron, elastic, with fixed metal bush		1	...	...	

57
Vocab.
2898

57
Sts. Settls.
3093

* One spare pivot is allowed to each station abroad, to be held in Ordnance Store charge.

Digitized by Google

Equipment of Hotchkiss, Q.F., 6-pr. Gun, Mark I, on Elastic Frame Stand—*continued.*

57
Gen. No.
2599

TABLE 10—*continued.*

	Proportions.	Components.	Spare. Per gun.	Spare. To number of guns or less per work.	Remarks.
Woolwich Store Charge, No. 16.					
Boxes, ordnance, Q.F., Hotchkiss, 6-pr.	1 per gun	...	...	...	
Clamps, tangent sight, Q.F., Hotchkiss, 6-pr.	...	1	...	1 to 5	
Ordnance, Q.F., Hotchkiss, 6-pr. (Mark I)	As authorised	...	...	...	
Buffer-tube	...	...	...	1 to 10	
Bushes, plate, wedge ...	...	...	2	...	For guns fitted with interchangeable wedge plates.
Cranks	...	1	...	1 to 5	
Crank handles	...	1	...	1 to 10	
Extractors	...	1	1	...	
Hammers, firing	...	1	1	...	
Pins, firing	...	...	6	...	
Plates, wedge	...	...	...	1 to 5, or less No. of wedges allowed	For guns fitted with interchangeable wedge plates.
Rocking shafts...	...	1	...	1 to 10	
Screws: set, crank-handle ...	...	...	1	...	
Screws: pivot, trigger	...	...	1	...	
Screws: preserving, steadying stud ...	...	1	...	...	
Screws: shoulder-piece, fixing ...	...	1	...	...	
Screws: stop, wedge	...	1	1	...	
Screws: trigger guard, fixing ...	...	...	3	...	
Shoulder-pieces	...	1	...	1 to 10	
Springs: crank-handle ...	...	...	1	...	
Springs: main	...	1	4	...	
Springs: trigger-sear ...	...	1	2	...	
Studs, shoulder-piece, fixing ...	...	1	...	1 to 10	
Studs, shoulder-piece, steadying	...	1	...	1 to 10	
Triggers	...	1	...	1 to 5	
Trigger-guards...	...	1	...	1 to 5	
Trigger-sears	...	1	1	..	
Wedges	...	1	...	1 to 10	
IMPLEMENTS.					
Brushes, sponge, without rod	1 per gun	...	...	...	
Cans, oil	1 per gun	...	...	...	
Drivers, screw	1 „	...	...	...	
Extractors, hand	1 „	...	...	...	
Rods, brush, sponge	1 per or less number of guns	...	...	...	
Tommies	1 „	...	...	...	For dismounting.

N.O.
3107

Digitized by Google

Equipment of Hotchkiss, Q.F., 6-pr. Gun, Mark I, on Elastic Frame Stand—*continued.*

TABLE 10—*continued.*	Proportions.	Components.	Spare.		Remarks.	57 / Gen. No. / 2599
			Per gun.	To number of guns or less per work.		
Woolwich Store Charge, No. 16—continued.						
Sights, Q.F. { fore, Hotchkiss, 6-pr.	...	1	...	1 to 5		
Sights, Q.F. { tangent, Hotchkiss (with range strip), 6-pr.	...	1	...	1 to 5		
Woolwich Store Charge, No. 18.						
Covers, gun and mounting, Q.F., 6-pr. (elastic stand)	1 per gun	...	...	...	To protect gun and mounting.	57 / Gen. No. / 2469
Woolwich Store Charge, No. 23.						
Gauges, cartridge, Q.F., 6-pr., chamber low	1 per sub-district	...	...	...	For gauging the cartridges before firing.	57 / I. of W. / 1143
Woolwich Store Charge, No. 25.						
Lamps, fighting*	2 per case-mate	...	...	...	For guns mounted in casemates not already provided with lamps.	57 / N.S. / 3643

* Oil and wick for these are supplied by Army Service Corps as required.

57 / Gibraltar / 5740

Digitized by Google

57
Gen. No.
2599

EQUIPMENT OF HOTCHKISS, Q.F., 6-PR. GUN, MARK II, ON RECOIL CONE AND EMBRASURE MOUNTINGS.

TABLE 11.

	Proportions.	Components.	Spare. Per gun.	Spare. To number of guns or less per work.	Remarks.
Woolwich Store Charge, No. 14.					
Carriages, Q.F., recoil 6-pr. Hotchkiss, Mark I (Cone and Embrasure).	As authorised	...	...	...	
Cradle—					
Caps, metal, hydraulic buffer	...	2	...	...	
Cradles, M.C.S., without fittings	...	1	...	...	
Glands, metal — ram, automatic	...	1	...	...	
Glands, metal — rod, piston, hydraulic buffer	...	2	...	...	
Pistons, steel, with rod, hydraulic buffers	...	2	...	...	
Plugs, filling hole, hydraulic buffer, No. 32, also emptying (2 plugs with 1 connecting chain and loop to a set) ...sets	...	2	1	...	
Rams, steel, automatic ...	...	1	...	...	
Rings, packing — leather, U section — hydraulic buffer	...	2	4	...	
Rings, packing — leather, U section — ram, automatic	...	1	2	...	
Rings, packing — metal — hydraulic buffers	...	2	...	...	
Rings, packing — metal — ram, automatic	...	1	...	...	
Screws, steel — clamping, cradle	...	1	...	...	
Screws, steel — fixing transom	...	4	2	...	
Screws, steel — securing spring, shoulder-piece	...	1	...	...	
Shoulder-piece, metal, with locking bolt, chain, loop, and split key	...	1	...	...	
Springs, steel — spiral — cylinder, hydraulic buffers	...	2	1	...	
Springs, steel — spiral — shoulder-piece ...	...	1	1	..	
Springs, steel — with screws — gland, hydraulic buffers	...	2	...	...	
Springs, steel — with screws — gland, ram, automatic	...	1	...	...	
Strips, metal, cylinders, hydraulic buffers	...	4	1	...	
Transoms, metal, with arms, spindle, shoulder-piece, and trigger guard	...	1	...	...	

Digitized by Google

Equipment of Hotchkiss, Q.F., 6-pr. Gun, Mark II, on Recoil Cone and Embrasure Mountings—*continued.*

TABLE II—*continued.*

	Proportions.	Components.	Spare. Per gun.	Spare. To number of guns or less per work.	Remarks.
Woolwich Store Charge, No. 14—continued.					
Carriages, Q.F., recoil, 6-pr., Hotchkiss, Mark I (Cone and Embrasure)—*continued.*					
Cradle—*continued.*					
Triggers, steel	...	1	...	...	
Washers, packing, hydraulic buffers, leather, set of 6 ... ... sets	...	1	2	...	
Crosshead—					
Capsquare, metal	...	2	...	...	
Crosshead, metal, without fittings	...	1	...	...	
Screws, steel, capsquare ...	...	4	1	...	
Pivot—					
Capsquares, metal	...	2	...	...	
Pivots, M.C.S., without fittings	...	1	...	...	
Plates, metal, { inscription	...	1	...	...	
with screws { instruction	...	1	...	...	
Screws, steel, capsquare ..	...	2	...	...	
Shield—	1 per carriage	...	...	...	
Bolts, steel, with nuts ...	...	6	...	...	
Keys, split, round, loop head, $\frac{3}{4}$-in. × $2\frac{3}{4}$-in.	...	6	3	...	
Shield, steel, without fittings	...	1	...	...	
IMPLEMENTS.					
Boxes, spare parts and implements	1 per carriage	...	...	...	
Drifts, steel	1	...	...	...	
Hammers	1	...	...	...	
Handles, clamping screws, capsquare	1 ,,	...	...	...	
Measures, filling buffer, with tube	1 ,,	...	...	...	
Spanners { No. 151, nut socket and cone	...	...	...	...	*See* Appendix XI, pages 278 to 292.
Spanners { hydraulic buffers { No. 66, cap, gland and piston	...	...	...	...	
Spanners { hydraulic buffers { No. 67, plugs, filling and emptying, and screws, transom	...	...	...	...	
Tommies, No. 20, steel ...	...	...	...	...	

Digitized by Google

Equipment of Hotchkiss, Q.F., 6-pr. Gun, Mark II, on Recoil Cone and Embrasure Mountings—*continued.*

57 Gen. No. 2599	**TABLE II**—*continued.*	Proportions.	Components.	Spare. Per gun.	Spare. To number of guns or less per work.	Remarks.
	Woolwich Store Charge, No. 14—continued.					
	Cone, Q.F., recoil, 6-pr., Mark I	As authorised	...	...	...	
	Cones, steel, with fixed metal socket	...	1	...	...	
	Plates, metal, inscription ...	...	1	...	...	
	Screws, steel, clamping ...	...	1	...	...	
	Plate, base, cone stand, Q.F., 6-pr.	As authorised	...	...	...	
	Plates, steel { anchoring	...	1	...	...	
	{ base	...	1	...	...	
	Bolts, holding down	...	10	...	...	
	Saddle, Q.F., 6-pr. Hotchkiss, recoil carriage (Embrasure)	As authorised	...	...	...	
	Bolts, steel, ck. head, with nuts	...	6	...	...	
	Saddles, M.C.S., without fittings	...	1	...	...	
	Screws, steel ... ... set	...	6	...	...	
	Plates, steel, screws ... ,,	...	2	...	...	
	Keys, split, round, loop head { $\frac{5}{8}$-in. × $2\frac{3}{4}$-in. ...	...	6	...	...	
	{ $\frac{5}{8}$-in. × $2\frac{1}{4}$-in. ...	...	6	...	...	
	Wedges, steel { flat	...	2	...	...	
	{ round ...	...	4	...	...	
	Socket—					
	Handles, screw, clamping	...	1	...	...	
	Screws, steel, clamping ...	...	1	...	...	
	Socket, metal, without fittings	...	1	...	...	
	Woolwich Store Charge, No. 16.					
57 24 1784	**Boxes,** spare parts and implements, Q.F., Hotchkiss, 6-pr.	1 per gun	...	...	...	
	Clamps, tangent sight, Q.F., Hotchkiss, 6-pr.	...	1	...	1 to 5	
	Ordnance, Q.F., Hotchkiss, 6-pr., Mark II	As authorised	...	...	...	
	Brackets, trigger-piece ...	...	1	...	1 to 5	
	Bushes, plate, wedge... ...	...	...	2	...	
	Cranks	...	1	...	1 to 5	
	Crank handles	...	1	...	1 to 10	
	Extractors	...	1	1	...	
	Hammers, firing	...	1	1	...	
	Pins, firing	...	...	6	...	

Digitized by Google

Equipment of Hotchkiss, Q.F., 6-pr. Gun, Mark II, on Recoil Cone and Embrasure Mountings—*continued.*

TABLE II—*continued.*

57
Gen. No.
2599

	Proportions.	Components.	Spare. Per gun.	Spare. To number of guns or less per work.	Remarks.
Woolwich Store Charge, No. 16—continued.					
Ordnance, Q.F., Hotchkiss, 6-pr., Mark II —*continued.*					
Plates, wedge	...	...	...	1 to 5, or less number of wedge plates allowed per sub-district	For guns fitted with interchangeable wedge plates.
Rocking-shafts...	...	1	...	1 to 10	
Screws: bracket, fixing-trigger-piece	...	...	3	...	
Screws: set, crank handle ...	...	...	1	...	
Screws: pivot, trigger-piece ..	...	...	1	...	
Screws: preserving stud shoulder piece: steadying	...	1	...	...	
Screws: preserving stud shoulder piece: fixing	...	1	...	...	
Screws: stop wedge	...	1	1	...	
Springs: crank-handle ..	...	...	1	...	
Springs: main	...	1	4	...	
Springs: trigger-sear ...	...	1	2	...	
Studs, shoulder piece: fixing ...	...	1	...	...	Not required with recoil cone mountings, but are supplied with the gun in case it should be mounted on a non-recoil mounting.
Studs, shoulder piece: steadying ...	...	1	...	...	
Trigger-pieces	...	1	...	1 to 5	
Trigger sears	...	1	1	...	
Wedges	...	1	...	1 to 10	
IMPLEMENTS.					
Brushes, sponge, without rod	1 per gun	...	...	...	
Cans, oil	1 ,,	...	...	...	
Drivers, screw	1 ,,	...	...	...	
Extractors, hand	1 ,,	...	...	...	
Rods, brush, sponge	1 per 2 or less number of guns	...	...	...	
Tommies...	1 per gun	...	...		
Sights, Q.F.: fore, Hotchkiss, 6-pr., Mark II	...	1	...	1 to 5	
Sights, Q.F.: tangent, Hotchkiss, with range strip, 6-pr., Mark II	...	1	...	1 to 5	

Digitized by Google

Equipment of Hotchkiss, Q.F., 6-pr. Gun, Mark II, on Recoil Cone and Embrasure Mountings—*continued.*

57
Gen. No.
2599

TABLE II—*continued.*

	Proportions.	Components.	Spare. Per gun.	Spare. To number of guns or less per work.	Remarks.
Woolwich Store Charge, No. 18.					
57 Gen. No. 2469 **Covers,** gun and mounting, Q.F., 6-pr. (Cone)	1 per gun	...	...	...	To protect gun and mounting.
Woolwich Store Charge, No. 23.					
57 I. of W. 1143 **Gauges,** cartridge, Q.F., 6-pr. chamber, low	1 per sub-district	...	...	...	For gauging the cartridges before firing.
Woolwich Store Charge, No. 25.					
57 N.S. 3643 **Lamps,** fighting*	2 per case-mate	...	...	...	For guns mounted in casemates not already provided with lamps.

57
Gibraltar
5740

* Oil and wick for these are supplied by Army Service Corps, as required.

Digitized by Google

EQUIPMENT OF NORDENFELT, Q.F., 6-PR. GUN, MARK III, ON RECOIL CONE AND EMBRASURE MOUNTINGS.

57
Gen. No
2599

TABLE 12.

	Proportions.	Components.	Spare. Per gun.	Spare. To number of guns or less per work.	Remarks.
Woolwich Store Charge, No. 14.					
Carriages, Q.F., recoil 6-pr. Nordenfelt, Mark I (Cone and Embrasure.)	As authorised	...	...	...	
Cradle—					
Caps, metal, hydraulic buffer	...	2	...	...	
Cradles, M.C.S., without fittings	...	1	...	...	
Glands, metal — ram, automatic	...	1	...	...	
Glands, metal — rod, piston, hydraulic buffer	...	2	...	...	
Pistons, steel, with rod, hydraulic buffers	...	2	...	...	
Plugs, filling hole, hydraulic buffer, No. 32, steel, also emptying (2 plugs with 1 connecting chain and loop to a set)... sets	...	2	1	...	
Rams, steel, automatic ...	...	1	...	...	
Rings, packing — leather U section — hydraulic buffers	...	2	4	...	
Rings, packing — leather U section — ram, automatic	...	1	2	...	
Rings, packing — metal — hydraulic buffers	...	2	...	...	
Rings, packing — metal — ram, automatic	...	1	...	...	
Screws, steel — clamping cradle	...	1	...	...	
Screws, steel — fixing transom ...	...	4	2	...	
Screws, steel — securing spring shoulder piece	...	1	...	...	
Shoulder-piece, metal, with locking bolt, chain, loop, and split key	...	1	...	...	
Springs, steel, spiral — cylinder, hydraulic buffers	...	2	1	...	
Springs, steel, spiral — shoulder-piece ...	...	1	1	...	
Springs, steel, with screws — gland, hydraulic buffers	...	2	...	...	
Springs, steel, with screws — gland, ram, automatic	...	1	...	...	
Strips, metal, cylinders, hydraulic buffers	...	4	1	...	
Transom, metal, with arms, spindle, shoulder piece and trigger guard	...	1	...	...	

Digitized by Google

57
Gen. No.
2599

Equipment of Nordenfelt, Q.F., 6-pr. Gun, Mark III, on Recoil Cone and Embrasure Mountings—*continued.*

TABLE 12—*continued.*

	Proportions.	Components.	Spare. Per gun.	Spare. To number of guns or less per work.	Remarks.
Woolwich Store Charge, No. 14—continued.					
Carriages, Q.F., recoil, 6-pr. Nordenfelt, Mark I. (Cone and Embrasure)—*cont.*					
Cradle—*continued.*					
Triggers, steel	...	1	...	...	
Washers, packing, hydraulic buffers, leather, set of 6 sets	...	1	2	...	
Crosshead—					
Capsquares, metal	...	2	...	...	
Crosshead, metal, without fittings	...	1	...	...	
Screws, steel, capsquare ...	...	4	1	...	
Pivot—					
Capsquares, metal	...	2	...	...	
Pivots, M.C.S., without fittings	...	1	...	...	
Plates, metal { inscription	...	1	...	...	
Plates, metal { instruction	...	1	...	...	
Screws, steel, capsquare ...	...	2	...	...	
Shield	1 per carriage	...	...	...	
Bolts, steel, with nuts ...	...	6	...	...	
Keys, split, round, loop head, $\frac{3}{8}$-in. × $2\frac{3}{4}$-in.	...	6	3	...	
Shield, steel, without fittings	...	1	...	...	
IMPLEMENTS.					
Boxes, spare parts and implements	1 per carriage	...	...	...	
Drifts, steel	1 ,,	...	...	...	
Hammers	1 ,,	...	...	...	
Handles, clamping screws, capsquare	1 ,,	...	...	...	
Measures, filling buffer, with tube	1 ,,	...	...	...	
Spanners { No. 151, nut, socket and cone	...	...	...	...	*See* Appendix XI, pages 278 to 292.
Spanners { hydraulic buffers { No. 66, cap, gland, and piston	...	...	...	...	
Spanners { hydraulic buffers { No. 67, plugs, filling and emptying, and screws transom	...	...	...	...	
Tommies, No. 20, steel ...	...	...	...	...	

Digitized by Google

Equipment of Nordenfelt, Q.F., 6-pr. Gun, Mark III, on Recoil Cone and Embrasure Mountings—*continued*.

TABLE 12—*continued*.

	Proportion.	Components.	Spare. Per gun.	Spare. To number of guns or less per work.	Remarks.
Woolwich Store Charge, No. 14—continued.					
Cone, Q.F., recoil 6-pr., Mark I	As authorised	...	...	...	
Cones, steel, with fixed metal socket	...	1	...	...	
Plates, metal, inscription ...	...	1	...	...	
Screws, steel, clamping ..	...	1	...	...	
Plate, base, cone stand, Q.F., 6-pr.	As authorised	...	...	...	
Plates, steel { anchoring ...	...	1	...	...	
Plates, steel { base	...	1	...	...	
Bolts, holding down	...	10	...	...	
Saddle, Q.F., 6-pr. Nordenfelt, recoil carriage (Embrasure)	As authorised	...	...	...	
Bolts, steel, ck. head, with nuts	...	6	...	...	
Saddle, M.C.S., without fittings	...	1	...	...	
Screws, steel ... ... set	...	6	...	...	
Plates, steel, screws ... set	...	2	...	...	
Keys, split, round, loop head { $\frac{3}{4}$-in. × $2\frac{3}{4}$-in....	...	6	...	...	
Keys, split, round, loop head { $\frac{5}{8}$-in. × $2\frac{1}{4}$-in....	...	6	...	...	
Wedges, steel { flat	...	2	...	...	
Wedges, steel { round ...	...	4	...	...	
Socket—					
Handles, screw-clamping...	...	1	...	...	
Screws, steel, clamping ...	...	1	...	...	
Sockets, metal, without fittings	...	1	...	...	
Woolwich Store Charge, No. 16.					
Boxes, spare parts and implements, Q.F., Nordenfelt, 6-pr.	1 per gun	...	...	...	
Clamps, tangent sight, Q.F., Nordenfelt, 6-pr.	...	1	...	1 to 5	
Ordnance, Q.F., Nordenfelt, 6-pr., Mark III	As authorised	...	...	..	
Action-cams	...	1	...	...	
Action-pins	...	1	...	...	
Blocks, breech	...	1	...	...	
Brackets, trigger-piece ...	...	1	...	1 to 5	
Extractors	...	1	...	1 to 5	
Indicators, drill stop... ...	...	1	...	...	
Levers, breech mechanism ...	...	1	...	...	
Levers, trigger...	...	1	...	1 to 5	
Pins, firing	...	1	6	...	
Screws, fixing { bracket, trigger-piece	...	...	2	...	
Screws, fixing { shield, loading ...	...	...	1	...	

57
Gen. No.
2599

57
24
1784

Digitized by Google

Equipment of Nordenfelt, Q.F., 6-pr. Gun, Mark III, on Recoil Cone and Embrasure Mountings—*continued.*

				Spare.		
57 Gen. No. 2599	**TABLE 12**—*continued.*	Proportions.	Components.	Per gun.	To number of guns or less per work.	Remarks.
	Woolwich Store Charge, No. 16—continued.					
	Ordnance, Q.F., Nordenfelt, 6-pr., Mark III—*continued.*					
	Shields, loading	...	1	...	...	
	Springs { indicator, drill stop	...	...	2	...	
	Springs { main	...	1	4	...	
	Springs { trigger-piece ...	...	...	2	...	
	Tappets, lever, trigger ...	...	1	...	1 to 5	
	Trigger-pieces	...	1	1	...	
	Wedges	...	1	...	...	
N.O. 3107	IMPLEMENTS.					
	Brushes, sponge, without rod	1 per gun	...	...	...	
	Cans, oil	1 per gun	...	...	...	
	Drifts { brass	1 ,,	...	...	...	
	Drifts { steel { ·27-in. ...	1 ,,	...	...	...	
	Drifts { steel { ·18-in. ...	1 ,,	...	...	...	
	Drivers, screw	1 ,,	...	...	...	
	Hammers (28 oz.)	1 ,,	...	...	...	
	Rods, brush, sponge	1 per 2 or less number of guns	...	...	...	
	Sights { fore, Nordenfelt, 6-pr.	...	1	...	1 to 5	
	Sights { tangent, Nordenfelt, 6-pr. (with range strip)	...	1	...	1 to 5	
57 Gen. No. 2469	*Woolwich Store Charge, No. 18.*					
	Covers, gun and mounting, Q.F., 6-pr.	1 per gun...	...	...	...	To protect gun and mounting.
	Woolwich Store Charge, No. 23.					
57 N.S. 3643	**Gauges.** cartridge, Q.F., 6-pr., chamber, low	1 per sub district	...	...	...	For gauging the carriage before firing.
57 Gibraltar 5740	*Woolwich Store Charge, No. 25.*					
	Lamps, fighting*	2 per casemate	...	...	...	For guns mounted in casemates not already provided with lamps.
54 Gen. No. 5646	*Woolwich Store Charge, No. 5.*					
	Harness, general service—bands, belly	1 per travelling carriage fitted for farmers draught	...	...	...	

* Oil and wick for these are supplied by Army Service Corps, as required.

Digitized by Google

EQUIPMENT OF HOTCHKISS, Q.F., 3-PR. GUN, MARK II, ON TRAVELLING CARRIAGES.

57
Gen. No.
259

TABLE 13.

	Proportions.	Components.	Spare. Per gun.	Spare. To number of guns or less per work.	Remarks.
Woolwich Store Charge, No. 13.					
Carriages, Q.F., 3-pr., travelling	1 per gun	...	...	...	
Axletrees, steel, 3rd class B, No. 56	...	1	...	...	
Bearings, metal { bolt, stay, tensile	...	2	...	...	
Bearings, metal { screw, traversing	...	2	...	...	
Bolts, steel { clip, axletree, with nut and split key	...	4	...	...	
Bolts, steel { spring, supporting, gear, with collar, nut, and split key*	...	1	...	...	
Bolts, steel { stay, tensile, with collar, nut and split key	...	1	...	...	
Boxes, trail, complete ...	...	1	...	...	
Brackets { metal, screw, brake, tension rod†	...	1	...	...	
Brackets { steel, supporting seat { left	...	1	...	...	
Brackets { steel, supporting seat { right	...	1	...	...	
Carriage body, without fittings	...	1	...	...	
Clips, steel, axletree*	...	2	...	...	
Clips, steel, axletree { left† ...	...	1	...	...	
Clips, steel, axletree { right†	...	1	...	...	
Collars, iron, tube, bolt, stay, tensile	...	1	...	...	
Eyes, trail { No 21* ...	...	1	...	...	
Eyes, trail { ,, 22† ...	...	1	...	...	
Guides, steel, shaft, brake, with split key†	...	2	...	...	
Handles, trail, lifting ...	...	2	... Per car.	...	
Keys, split, round, loop head { $\frac{3}{8}$-in. × $3\frac{3}{4}$-in.*	...	1	1	...	
Keys, split, round, loop head { $\frac{3}{8}$-in. × 3-in.†	...	5	2	...	
Keys, split, round, loop head { $\frac{1}{4}$-in. × $1\frac{3}{4}$-in.	...	7	1	...	
Keys, split, round, loop head { $\frac{1}{4}$-in. × 2-in....	...	7	1	...	
Keys, split, round, loop head { $\frac{7}{16}$-in. × $1\frac{3}{8}$-in.†	...	5	...	...	
Keys, split, round, loop head { $\frac{1}{16}$-in. × $\frac{3}{4}$-in....	...	4	...	...	
Pins, steel, linch, 3rd class ...	...	2	1	...	
Plates, metal, with screws { inscription...	...	1	...	...	
Plates, metal, with screws { instruction...	...	1	...	...	
Seats, wood	...	2	...	...	
Sockets, metal { carrying handspike	...	1	...	...	
Sockets, metal { traversing ,,	...	1	...	...	

* For Mark I carriage only.

† For Mark II carriage only.

Digitized by Google

Equipment of Hotchkiss, Q.F., 3-pr. Gun, Mark II, on Travelling Carriages—*continued.*

57
Gen. No. 2599

TABLE 13—*continued.*

	Proportions.	Components.	Spare. Per gun.	Spare. To number of guns or less per work.	Remarks.
Woolwich Store Charge, No. 13—continued.					
Carriages, Q.F., 3-pr., travelling—*continued.*					
Springs, steel, supporting gear*	...	1	...	...	
Staples, metal, traversing handspike	...	1	...	...	
Stays, steel, tensile — with collar and nut*: left	...	1	...	...	
Stays, steel, tensile — with collar and nut*: right	...	1	...	...	
Stays, steel, tensile — with collar, nut and key†: left	...	1	...	...	
Stays, steel, tensile — with collar, nut and key†: right	...	1	...	...	
Washers, drag, 3rd class B	...	2	Per car. 1	...	
Wheels, 3rd class B, No. 52	...	2	...	...	
Gear, brake—					
Blocks, wood, brake	...	2	...	...	
Brackets, steel, shaft, brake†: left	...	1	...	...	
Brackets, steel, shaft, brake†: right	...	1	...	...	
Collars, metal, jamming india-rubber pad*	...	2	...	...	
Hooks, steel, brake*	...	1	...	...	
Levers, steel, brake†	...	1	...	...	
Links, steel†	...	2	...	...	
Nuts, metal, screw, brake rod, tension†	...	1	...	...	
Pads, india-rubber, with metal bush*	...	2	1	...	
Pins, steel, with split key — lever brake	...	1	...	...	
Pins, steel, with split key — links†	...	2	...	...	
Pins, steel, with split key — rods, connecting brake†	...	2	...	...	
Pins, steel, with split key — rods, adjusting brake*	...	2	...	...	
Plates, iron — connecting plate loop†	...	1	...	...	
Plates, iron — loop, stays, supporting brake†	...	2	...	...	
Rods, steel — adjusting brake, with nuts and split key*	...	2	...	...	
Rods, steel — connecting brake†	...	2	...	...	
Screws, steel, brake rod, tension†	...	1	...	...	
Shafts, steel — brake, with collars and metal bushes*	...	1	...	...	
Shafts, steel — brake†	...	1	...	...	

* For Mark I carriage only. † For Mark II carriage only.

Digitized by Google

Equipment of Hotchkiss, Q.F., 3-pr. Gun, Mark II, on Travelling Carriages—*continued.*

87
Gen. No.
2599

TABLE 13—*continued.*

	Proportions.	Components.	Spare. Per gun.	Spare. To number of guns or less per work.	Remarks.
Woolwich Store Charge, No. 13—continued.					
Carriages, Q.F., 3-pr. travelling—*continued.*					
Gear, brake—*continued.*					
Shoes, steel, brake block { with screws*	...	2	...	...	
Shoes, steel, brake block { with split key†	...	2	...	...	
Springs, steel, india-rubber pad*	...	2	...	...	
Stays, iron, supporting brake†	...	2	...	...	
Wheels, metal hand, with taper pin†	...	1	...	...	
Gear, elevating—					
Nuts, metal, elevating ...	...	1	...	...	
Screws, steel, elevating, No. 88, with nut and pin	...	1	...	...	
Sockets, metal, nut, elevating	...	1	...	...	
Trunnions, steel, socket, nut, elevating	...	2	...	...	
Wheels, metal, hand ...	...	1	...	...	
Gear, traversing—					
Brackets, metal, screw, traversing	...	1	...	...	
Screws { metal, lubricating, $\frac{5}{16}$-in. boss head†	...	4	...	...	
Screws { steel, traversing, with collar, nut and split keys	...	1	...	...	
Wheels, metal, hand ...	...	1	...	...	
Pivot—					
Capsquares, metal	...	2	...	...	
Nuts, steel, holding down pivot, with split key	...	1	...	...	
Pivot, M.C.S., without fittings	...	1	...	...	
Screws, steel, capsquare ...	...	2	...	1 to 5	
Shields, steel, with bolts and split keys	1	...	...	...	
Sockets, with 2 hydraulic buffers—					
Caps, metal, hydraulic buffers	...	2	...	...	
Glands, metal, hydraulic buffers	...	2	...	...	

* For Mark I carriage only. † For Mark II carriage only.

Digitized by Google

Equipment of Hotchkiss, Q.F., 3-pr. Gun, Mark II, on Travelling Carriages—*continued.*

57

Gen. No. 2599

TABLE 13—*continued.*

	Proportions.	Components.	Spare. Per gun.	Spare. To number of guns or less per work.	Remarks.
Woolwich Store Charge, No. 13—continued.					
Carriages, Q.F., 3-pr., travelling—*continued.*					
Sockets, with 2 hydraulic buffers—*continued.*					
Pistons, steel, with rod, hydraulic buffers, with nuts and split key	...	2	...	...	
Plugs, filling hole, hydraulic buffer, No. 31, steel; also emptying (2 plugs with 1 connecting chain and loop to a set), sets	...	2	...	1 to 5	
Rings, packing, hydraulic buffer, leather U section	...	2	Per car. 2	...	
Sockets, metal, without fittings	...	1	...	...	
Springs, steel, spiral cylinders, hydraulic buffers	...	2	...	1 to 5	
Strips, metal, cylinders hydraulic buffers	...	4	...	...	
Washers, packing, hydraulic buffers, leather, (set of 6), sets	...	1	1	...	
Sockets, screw, elevating ...	1 per carriage	...	...	...	
Collars, steel, screws, securing socket	...	2	...	...	
Keys, steel { firing, with lanyard	...	1	...	...	
Keys, steel { taper, with collar and nuts	...	1	...	...	
Keys, steel { screw, elevating, with chain and loop	...	1	...	...	
Screws, steel, set { screw, elevating	...	1	...	...	
Screws, steel, set { trigger	...	1	...	...	
Sockets, metal, without fittings	...	1	...	...	
Triggers, steel	...	1	...	...	
Straps, securing, leather { 1-in. × 44-in. D.L.	...	1	...	...	
Straps, securing, leather { 1-in × 13-in.	...	2	...	...	
Ties, linch pin	...	2	2	...	
IMPLEMENTS.					
Cans, lubricating, No. 9 ...	1 per carriage	...	...	...	
Drifts, steel	,,	...	...	...	
Hammers, 28 oz.	,,	...	...	...	

Digitized by Google

Equipment of Hotchkiss, Q.F., 3-pr. Gun, Mark II, on Travelling Carriages—*continued.*

57
Gen. No.
2599

TABLE 13—*continued.*

	Proportions.	Components.	Spare. Per gun.	Spare. To number of guns or less per work.	Remarks.
Woolwich Store Charge, No. 13—continued.					
Carriages, Q.F., 3-pr., travelling—*continued.*					
Spanners: hydraulic buffers No. 63	...	...	...	...	*See* Appendix XI., pages 278 to 280.
Spanners: hydraulic buffers ,, 64	...	...	...	...	
Spanners: hydraulic buffers ,, 65	...	...	...	...	
Spanners: McMahon, 12-in.	1 per carriage	...	...	...	
Handspikes, traversing, No. 3	1 ,,	1 per car.	...	...	
Limbers, Q.F. 3-pr. travelling	1 ,,	...	...	...	
Axletrees, steel, 3rd class, B: No. 57*	...	1	...	...	
Axletrees, steel, 3rd class, B: ,, 175†	...	1	...	...	
Bars, steel: channel, rear†	...	1	...	...	
Bars, steel: splinter	...	1	...	...	
Bands, iron, axletree, with bolts and nuts†	...	2	...	...	
Bearings, steel, axletree†	...	2	...	...	
Boards, foot*	...	1	...	...	
Boxes, ammunition and tool:—†					
Boards: box, ammunition: bottom	...	5	...	...	
Boards: box, ammunition: front	...	1	...	...	
Boards: box, ammunition: rear (also tail-board)	...	1	...	...	
Boards: box, ammunition: side	...	2	...	...	
Boards: box, ammunition: top	...	1	...	...	
Boards: box, tool: front	...	1	...	...	
Boards: box, tool: side	...	2	...	...	
Boards: box, tool: top, in 2 pieces (also footboard)	...	1	...	...	
Chains, iron, tailboard with loop	...	2	...	...	
Guards, steel	...	2	...	...	
Hasps, iron, box, tool	...	1	...	...	
Hinges, steel ,,	...	2	...	...	
Irons, nib strap side	...	2	...	...	
Joints, steel, tailboard	...	2	...	...	
Keys, iron with chain: guard	...	4	...	...	
Keys, iron with chain: tailboard	...	2	...	...	
Plates, iron: corner	...	4	...	...	
Plates, iron: front	...	2	...	...	
Plates, iron: securing tool box	...	4	...	...	
Plates, iron: striking	...	1	...	...	
Plates, iron: strap, side	...	2	...	...	
Plates, steel: angle, supporting ammunition carriers	...	10	...	...	
Plates, steel: strap, nib iron, tailboard	...	2	...	...	

* For Mark I limber only. † For Mark II limber only.

Digitized by Google

Equipment of Hotchkiss, Q.F., 3-pr. Gun, Mark II, on Travelling Carriages—*continued.*

57
Gen. No.
2599

TABLE 13—*continued.*

	Proportions.	Components.	Spare. Per gun.	Spare. To number of guns or less per work.	Remarks.
Woolwich Store Charge, No. 13—continued.					
Limbers, Q.F., 3-pr., travelling—*continued.*					
Boxes, ammunition and tool—*continued.*					
Sockets, steel: angle: left	...	1	...	...	
Sockets, steel: angle: right	...	1	...	...	
Sockets, steel: guard: plain	...	2	...	...	
Boxes, ammunition—*					
Boxes, ammunition, steel, without fittings	...	1	...	...	
Guards, steel: near	...	1	...	...	
Guards, steel: off	...	1	...	...	
Keys, tail or lid	...	2	...	...	
Boxes, tool complete*	...	1	...	...	
Bolts, securing box, ammunition, with nut and split key*	...	8	...	...	
Brackets, iron, supporting axletree, springs*	...	4	...	...	
Carriers ammunition, wood*	...	10	...	...	
Collars, iron, tube, spring†	...	2	...	...	
Futchels, steel: angle: centre*	...	2	...	...	
Futchels, steel: angle: side*	...	2	...	...	
Futchels, steel: centre†	...	1	...	...	
Futchels, steel: side†	...	2	...	...	
Hooks, iron limber: No. 16†	...	1	...	...	
Hooks, iron limber: „ 17*	...	1	...	...	
Irons, scroll: front†	...	2	...	...	
Irons, scroll: rear†	...	2	...	...	
Keys: iron, split, $\frac{1}{16}$-in. × 1-in.*	...	8	...	...	
Keys: round, loop head, $\frac{3}{16}$-in. × 1¼-in.*	...	4	...	...	
Keys: round, loop head, ¼-in. × 2-in.	...	1	...	...	
Keys: round, loop head, ¼-in. × 1½-in.*	...	8	...	...	
Keys: steel, limber, hook, with chain: No. 10†	...	1	...	1 to 5	
Keys: steel, limber, hook, with chain: No. 11*	...	1	...	1 to 5	
Loop, steel, draught: double†	...	1	...	...	
Loop, steel, draught: single †*	...	1	...	...	
	...	4	...	...	
Pins: bracket, supporting spring, with collar and split key*	...	4	...	...	
Pins: iron, linch, 3rd class	...	2	...	...	
Pins: steel, shaft, No. 26 shaft	...	1	...	1 to 5	

* For Mark I limber only. † For Mark II limber only.

Digitized by Google

Equipment of Hotchkiss, Q.F., 3-pr. Gun, Mark II, on Travelling Carriages—*continued.*

57
Gen. No.
2599

TABLE 18—*continued.*

	Proportions.	Components.	Spare. Per gun.	Spare. To number of guns or less per work.	Remarks
Woolwich Store Charge, No. 13—continued.					
Limbers, Q.F., 3-pr., travelling—*continued.*					
Plates, steel: clip, spring	...	2	...	...	
Plates, steel: connecting, rear*	...	1	...	...	
Plates, steel: coupling, spring, with stop†	...	4	...	...	
Plates, steel: sweep, rear*	...	1	...	...	
Plates, metal, inscription, with screws*	...	1	...	...	
Props, shaft	...	2	...	...	
Shafts: No. 26, near	...	1	...	...	
Shafts: ,, 27, off	...	1	...	...	
Sockets, steel, draught, near†	...	1	...	...	
Springs, steel, side	...	2	...	...	
Staples, iron: round, crowned, small†	...	6	...	...	
Staples, iron: spring, with nuts and split keys	...	4	...	...	
Staples, steel, shaft: near	...	1	...	...	
Staples, steel, shaft: off	...	1	...	...	
Stays: iron footboard*	...	3	...	...	
Stays: steel, diagonal†	...	2	...	...	
Washers, drag, 3rd class, B	...	1	...	...	
Wheels, 3rd class B, No. 52	...	2	...	...	
LEATHERWORK.					
Leathers for guards, box, ammunition	...	2	...	...	
Straps: 1-in. × 10-in.	...	2	...	...	
Straps: 3-in. × 58-in.	...	1	...	...	
Ties: linch pin	...	2	...	...	
Ties: tail or lid, box, ammunition*	...	2	...	...	
Woolwich Store Charge, No. 16.					
Boxes, spare parts and implements, Q.F., Hotchkiss, 3-pr.	1 per gun	...	...	...	
Ordnance, Q.F., Hotchkiss, 3-pr., Mark II	As authorised	...	...	...	
Bushes, plate, wedge	...	...	2	...	
Cranks	...	1	...	1 to 5	
Crank-handles	...	1	...	1 to 10	
Extractors	...	1	1	...	

57
24
1784

* For Mark I limber only. † For Mark II limber only.

Digitized by Google

Equipment of Hotchkiss, Q.F., 3-pr. Gun, Mark II, on Travelling Carriages—*continued.*

57
Gen. No.
2599

TABLE 18—*continued.*

	Proportions.	Components.	Spare. Per gun.	Spare. To number of guns or less per work.	Remarks.
Woolwich Store Charge, No. 16—continued.					
Ordnance, Q.F., Hotchkiss, 3-pr., Mark II—*continued.*					
Hammers, firing	...	1	1	...	
Pins, firing	...	...	6	...	
Plates, wedge	...	...	...	1 to 5 or less No. of wedges allowed	For guns fitted with interchangeable wedge plates.
Rocking-shafts	...	1	...	1 to 10	
Screws: bracket, fixing-trigger ...	...	...	3	...	
Screws: set, crank-handle ...	...	...	1	...	
Screws: preserving stud steadying, shoulder piece fixing	...	1	...	...	
Screws: stop, wedge	...	1	1	...	
Springs: crank-handle ...	...	...	1	...	
Springs: main	...	1	4	...	
Springs: trigger-sear	...	1	2	...	
Studs, shoulder piece: fixing ...	...	1	...	1 to 10	
Studs, shoulder piece: steadying	...	1	...	1 to 10	
Trigger-sears	...	1	1	...	
Wedges	...	1	...	1 to 10	
IMPLEMENTS.					
Brushes, sponge, without rod	1 per gun...	...	...	...	
N.O. 3107 Cans, oil	1 ,,	...	...	...	
Drivers, screw	1 ,,	...	...	...	
Extractors, hand	1 ,,	...	...	...	
Rods, brush, sponge ...	1 per 2 or less number of guns	...	...	...	
Tommies...	1 ,,	...	...	...	For dismounting.
Sights: fore	...	1	...	1 to 5	
Sights: tangent (with range strip)	...	1	...	1 to 5	
Woolwich Store Charge, No. 17.					
Clamps, tangent sight, Q.F., Hotchkiss, 3-pr.	...	1	...	1 to 5	
Woolwich Store Charge, No. 18.					
57 **Covers**, breech, Q.F., 3-pr. ...	1 per gun	...	...	...	
Gen. No. 2784 **Ropes**, drag, light ... pairs	1 ,,	...	...	...	
Tampeons, Q.F., 3-pr.... ...	1 ,,	...	...	...	57/24/176?.
Woolwich Store Charge, No. 23.					
Gauges, cartridge, Q.F., 3-pr., chamber, low	1 per sub-district	...	...	...	For gauging the cartridges before firing.

Digitized by Google

EQUIPMENT OF NORDENFELT, Q.F., 3-PR. GUN, MARK I, ON TRAVELLING CARRIAGES.

57
Gen. No. 2599

TABLE 14.

	Proportions.	Components.	Spare. Per gun.	Spare. To number of guns or less per work.	Remarks.
Woolwich Store Charge, No. 5.					
Harness, General Service—Bands, belly	1 per travelling carriage fitted for farmers' draught.	...	...	...	
Woolwich Store Charge, No. 13.					
Carriages, Q.F., 3-pr., travelling	1 per gun.	...	...	...	
Axletrees, steel, 3rd class B, No. 56	...	1	...	...	
Bearings, metal: bolt, stay, tensile	...	2	...	...	
Bearings, metal: screw, traversing	...	2	...	...	
Bolts, steel: clip, axletree, with nut and split key	...	4	...	...	
Bolts, steel: spring, supporting gear, with collar, nut, and split key*	...	1	...	...	
Bolts, steel: stay, tensile, with collar, nut, and split key	...	1	...	...	
Boxes, trail, complete ...	...	1	...	...	
Brackets: metal, screw, brake, tension rod†	...	1	...	...	
Brackets: steel, supporting seat: left	...	1	...	...	
Brackets: steel, supporting seat: right	...	1	...	...	
Carriage, body without fittings	...	1	...	...	
Clips, steel, axletree*	...	2	...	...	
Clips, steel, axletree: left†	...	1	...	...	
Clips, steel, axletree: right†	...	1	...	...	
Collars, iron, tube, bolt, stay, tensile	...	1	...	...	
Eyes, trail: No. 21*... ...	...	1	...	...	
Eyes, trail: ,, 22†... ...	...	1	...	...	
Guides, steel, shaft, brake, with split key†	...	2	...	...	
Handles, trail, lifting ...	...	2	... Per car.	...	
Keys, split round, loop head: $\frac{5}{8}$-in. × $3\frac{3}{4}$-in.*	...	1	2	...	
Keys, split round, loop head: $\frac{1}{2}$-in. × 3-in.†	...	5	2	...	
Keys, split round, loop head: $\frac{1}{2}$-in. × $1\frac{3}{4}$-in.	...	7	1	...	
Keys, split round, loop head: $\frac{1}{4}$-in. × 2 in. ...	...	7	1	...	
Keys, split round, loop head: $\frac{9}{10}$-in. × $1\frac{3}{4}$-in.†	...	5	...	...	
Keys, split round, loop head: $\frac{7}{10}$-in. × $\frac{3}{4}$-in. ...	...	4	...	...	
Pins, steel, linch, 3rd class ...	...	2	1	...	
Plates, metal, with screws: inscription ...	...	1	...	...	
Plates, metal, with screws: instruction ...	...	1	...	...	
Seats, wood	...	2	...	...	
Sockets, metal: carrying handspike	...	1	...	...	
Sockets, metal: traversing ,,	...	1	...	...	
Springs, steel, supporting gear*	...	1	...	...	
Staples, metal, traversing handspike	...	1	...	...	

54
Gen. No. 5646

* For Mark I carriage only. † For Mark II carriage only

Digitized by Google

Equipment of Nordenfelt, Q.F., 3-pr. Gun, Mark I, on Travelling Carriages—*continued.*

57
Gen. No.
2599

TABLE 14—*continued.*

	Proportions.	Components.	Spare. Per gun.	Spare. To number of guns or less per work.	Remarks.
Woolwich Store Charge, No. 13—continued.					
Carriages, Q.F., 3-pr., travelling—*continued.*					
Stays, steel, tensile: with collar, and nut* — left	...	1	...	...	
Stays, steel, tensile: with collar, and nut* — right	...	1	...	...	
Stays, steel, tensile: with collar, nut, and key† — left	...	1	...	...	
Stays, steel, tensile: with collar, nut, and key† — right	...	1	...	...	
Washers, drag, 3rd class B	...	2	1 per car.	...	
Wheels, 3rd class B, No. 52	...	2	...	...	
Gear, brake—					
Blocks, wood, brake	...	2	...	...	
Brackets, steel, shaft, brake† — left	...	1	...	...	
Brackets, steel, shaft, brake† — right	...	1	...	...	
Collars, metal, jamming india-rubber pad*	...	2	...	...	
Hooks, steel, brake*	...	1	...	...	
Levers, steel, brake†	...	1	...	...	
Links, steel†	...	2	...	...	
Nuts, metal, screw, brake rod, tension†	...	1	...	...	
Pads, india-rubber, with metal bush*	...	2	1 per car.	...	
Pins, steel, with split key: lever brake†	...	1	...	...	
Pins, steel, with split key: links†	...	2	...	...	
Pins, steel, with split key: rods, connecting brake†	...	2	...	...	
Pins, steel, with split key: rods, adjusting brake*	...	2	...	...	
Plates, iron: connecting plate loop†	...	1	...	...	
Plates, iron: loop, stays, supporting brake†	...	2	...	...	
Rods, steel: adjusting brake with nuts and split key*	...	2	...	...	
Rods, steel: connecting brake†	...	2	...	...	
Screws, steel, brake rod tension†	...	1	...	...	
Shafts, steel: brake, with collars and metal bushes*	...	1	...	...	
Shafts, steel: brake†	...	1	...	...	
Shoes, steel: brake block, with screws*	...	2	...	...	
Shoes, steel: brake block, with split key†	...	2	...	...	

* For Mark I carriage only. † For Mark II carriage only.

Digitized by Google

Equipment of Nordenfelt, Q.F., 3-pr. Gun, Mark I, on Travelling Carriages—*continued.*

TABLE 14—*continued.*

	Proportions.	Components.	Spare. Per gun.	Spare. To number of guns or less per work.	Remarks.
Woolwich Store Charge, No. 13—continued.					
Carriages, Q.F., 3-pr., travelling—*continued.*					
Gear, brake—*continued.*					
Springs, steel, india-rubber pad*	...	2	...	...	
Stays, iron, supporting brake†	...	2	...	...	
Wheels, metal, hand, with taper pin†	...	1	...	...	
Gear, elevating—					
Nuts, metal, elevating ...	...	1	...	...	
Screws, steel, elevating, No. 88, with nut and pin	...	1	...	...	
Sockets, metal, nut, elevating	...	1	...	...	
Trunnions, steel, socket, nut elevating	...	2	...	...	
Wheels, metal, hand ...	...	1	...	...	
Gear, traversing—					
Brackets, metal, screw, traversing	...	1	...	...	
Screws { metal, lubricating, $\frac{5}{16}$-inch boss head†	...	4	...	...	
Screws { steel, traversing, with collar, nut and split keys	...	1	...	...	
Wheels, metal, hand	...	1	...	...	
Pivot—					
Capsquares, metal	...	2	...	...	
Nuts, steel, holding down pivot, with split key	...	1	...	...	
Pivots, M.C.S., without fittings	...	1	...	...	
Screws, steel, capsquare ...	...	2	...	1 to 5	
Shields, steel, with bolts and split keys	...	1	...	...	
Socket, with 2 hydraulic buffers—					
Caps, metal, hydraulic buffers	...	2	...	...	
Glands, metal, hydraulic buffers	...	2	...	...	
Pistons, steel, with rod, hydraulic buffers, with nuts and split keys	...	2	...	...	

* For Mark I carriage only.

† For Mark II carriage only.

Digitized by Google

Equipment of Nordenfelt, Q.F., 3-pr. Gun, Mark I, on Travelling Carriages—*continued.*

57
Gen. No.
2599

TABLE 14—*continued.*

	Proportions.	Components.	Spare. Per gun.	Spare. To number of guns or less per work.	Remarks.
Woolwich Store Charge, No. 13—continued.					
Carriages, Q.F., 3-pr., travelling—*continued.*					
Socket, with 2 hydraulic buffers—*continued.*					
Plugs, filling hole, hydraulic buffer, No. 31, steel; also emptying (2 plugs with 1 connecting chain and loop to a set) sets	...	2	...	1 to 5	
Rings, packing hydraulic buffer, leather U section	...	2	2 per car.	...	
Sockets, metal, without fittings	...	1	...	...	
Springs, steel, spiral, cylinders, hydraulic buffers	...	2	...	1 to 5	
Strips, metal, cylinders, hydraulic buffers	...	4	...	...	
Washers, packing, hydraulic buffer, leather (set of 6), sets	...	1	1 per car.	...	
Straps, securing, leather { 1-in. × 44-in. D.L.	...	1	...	...	
{ 1-in. × 13-in. ...	...	2	...	...	
Ties, linch pin	...	2	...	...	
IMPLEMENTS.					
Cans, lubricating, No. 9 ...	1 per carriage.	...	...	...	
Drifts, steel	1 ,,	...	...	...	
Hammers, 28 oz.	1 ,,	...	...	...	
Spanners { hydraulic buffer { No. 63	...	...	...	...	*See* Appendix XI., pages 278 to 280.
{ ,, 64	...	...	...	...	
{ ,, 65	...	...	...	...	
{ McMahon, 12-in.	1 per carriage.	...	...	...	
Handspikes, traversing, No. 3	1 ,,	...	1 per car.	...	
Limbers, Q.F., 3-pr., travelling	1 ,,	...	...	...	
Axletrees, steel, { No. 57* ...	...	1	...	...	
3rd class B { ,, 175† ...	...	1	...	...	
Bars, steel { channel rear† ...	...	1	...	...	
{ splinter	...	1	...	...	
Bands, iron, axletree, with bolts and nuts†	...	2	...	...	

* For Mark I limber only. † For Mark II limber only.

Digitized by Google

Equipment of Nordenfelt, Q.F., 3-pr. Gun, Mark I, on Travelling Carriages—*continued.*

TABLE 14—*continued.*

	Proportions.	Components.	Spare. Per gun.	Spare. To number of guns or less per work.	Remarks.
Woolwich Store Charge, No. 13—continued.					
Limbers, Q.F., 3-pr., travelling—*continued.*					
Bearings, steel, axletree†	...	2	...	...	
Boards, foot*	...	1	...	...	
Boxes, ammunition, and tool—†					
Boards: bottom	...	5	...	...	
Boards: box, ammunition: front	...	1	...	...	
Boards: box, ammunition: rear (also tailboard)	...	1	...	...	
Boards: box, ammunition: side	...	2	...	...	
Boards: box, ammunition: top	...	1	...	...	
Boards: box, tool: front	...	1	...	...	
Boards: box, tool: side	...	2	...	...	
Boards: box, tool: top, in 2 pieces (also footboard)	...	1	...	...	
Chains, iron, tailboard with loop	...	2	...	...	
Guards, steel	...	2	...	...	
Hasps, iron, box, tool	...	1	...	...	
Hinges, steel, ,, ,,	...	2	...	...	
Irons, nib, strap, side	...	2	...	...	
Joints, steel, tailboard	...	2	...	...	
Keys, iron, guards with chain, tailboard	...	4	...	...	
	...	2	...	...	
Plates, iron: corner	...	4	...	...	
Plates, iron: front	...	2	...	...	
Plates, iron: securing tool box	...	4	...	...	
Plates, iron: striking	...	1	...	...	
Plates, iron: strap, side	...	2	...	...	
Plates, steel: angle, supporting ammunition carriers	...	10	...	...	
Plates, steel: strap, nib iron, tailboard	...	2	...	...	
Sockets, steel, guard: angle, left	...	1	...	...	
Sockets, steel, guard: angle, right	...	1	...	...	
Sockets, steel, guard: plain	...	2	...	...	
Boxes, ammunition—*					
Boxes, ammunition, steel, without fittings	...	1	...	...	
Guards, steel: near	...	1	...	...	
Guards, steel: off	...	1	...	...	
Keys, tail or lid	...	2	...	...	
Boxes, tool, complete*	...	1	...	...	
Bolts, securing box ammunition, with nut and split key*	...	8	...	...	

* For Mark I limber only. † For Mark II limber only.

Digitized by Google

Equipment of Nordenfelt, Q.F., 3-pr. Gun, Mark I, on Travelling Carriages—*continued.*

57

Gen. No. 2599

TABLE 14—*continued.*

	Proportions.	Components.	Spare. Per gun.	Spare. To number of guns or less per work.	Remarks.
Woolwich Store Charge, No. 13—continued.					
Limbers, Q.F., 3-pr., travelling—*continued.*					
Brackets, iron, supporting axletree springs*	...	4	...	...	
Carriers, ammunition wood*	...	10	...	...	
Collars, iron, tube, spring†	...	2	...	...	
Futchels, steel: angle: centre*	...	2	...	...	
Futchels, steel: angle: side*	...	2	...	...	
Futchels, steel: centre†	...	1	...	...	
Futchels, steel: side†	...	2	...	...	
Hooks, iron, limber: No. 16†	...	1	...	...	
Hooks, iron, limber: ,, 17*	...	1	...	...	
Irons, scroll: front†	...	2	...	...	
Irons, scroll: rear†	...	2	...	...	
Keys: iron, split, round, loop head: $\frac{1}{10}$-in. × 1-in.*	...	8	...	...	
Keys: iron, split, round, loop head: $\frac{3}{16}$-in. × 1½-in.*	...	4	...	...	
Keys: iron, split, round, loop head: ¼-in. × 2-in.	...	1	...	...	
Keys: iron, split, round, loop head: ¼-in. × 1½-in.*	...	8	...	...	
Keys: steel, limber hook, with chain: No. 10†	...	1	...	1 to 5	
Keys: steel, limber hook, with chain: No. 11*	...	1	...	1 to 5	
Loops, steel, draught, double†	...	1	...	...	
Loops, steel, draught, single: †	...	1	...	...	
Loops, steel, draught, single: *	...	4	...	...	
Pins: bracket, supporting, spring, with collar and split key*	...	4	...	...	
Pins: iron, linch, 3rd class	...	2	...	...	
Pins: steel, shaft No. 26	...	1	...	1 to 5	
Plates, steel: clip, spring	...	2	...	...	
Plates, steel: connecting, rear*	...	1	...	...	
Plates, steel: coupling, spring, with stop*	...	4	...	...	
Plates, steel: sweep, rear	...	1	...	...	
Plates, metal, inscription, with screws	...	1	...	...	
Props, shaft	...	2	...	...	
Shafts: No. 26, near	...	1	...	...	
Shafts: No. 27, off	...	1	...	...	
Sockets, steel, draught, near†	...	1	...	...	
Springs, steel, side	...	2	...	...	
Staples, iron: round, crowned, small†	...	6	...	...	
Staples, iron: spring, with nuts and split keys	...	4	...	...	
Staples, steel shft: near	...	1	...	...	
Staples, steel shft: off	...	1	...	...	

* For Mark I limber only. † For Mark II limber only.

Digitized by Google

Equipment of Nordenfelt, Q.F., 3-pr. Gun, Mark I, on Travelling Carriages—*continued.*

57
Gen. No.
2599

TABLE 14—*continued.*

	Proportions.	Components.	Spare. Per gun.	Spare. To number of guns or less per work.	Remarks.
Woolwich Store Charge, No. 13—continued.					
Limbers, Q.F., 3-pr., travelling—*continued.*					
Stays { iron, footboards*	...	3	...	...	
Stays { steel, diagonal†	...	2	...	...	
Washers, drag, 3rd class B	...	1	...	...	
Wheels, 3rd class, B No. 52	...	2	...	...	
LEATHER WORK.					
Leathers for guards, box, ammunition	...	2	...	...	
Straps { 1-in. × 10-in.	...	2	...	...	
Straps { 3-in. × 58-in.	...	1	...	...	
Ties { linch pin	...	2	...	...	
Ties { tail or lid-box, ammunition*	...	2	...	...	
Woolwich Store Charge, No. 16.					
Boxes, spare parts and implements, Q.F., Nordenfelt, 3-pr.	1 per gun	...	...	...	57 / 24 / 1784
Ordnance, Q.F., Nordenfelt, 3-pr., Mark I	As authorised	...	...	...	
Action-cams	...	1	...	...	
Action-pins	...	1	...	...	
Blocks, breech	...	1	...	...	
Brackets, trigger	...	1	...	1 to 5	
Extractors	...	1	...	1 to 5	
Indicators, drill stop	...	1	...	...	
Levers, breech mechanism	...	1	...	...	
Levers, trigger	...	1	...	1 to 5	
Pins, firing	...	1	6	...	
Screws, fixing, bracket, trigger	...	...	4	...	
Springs { indicator, drill stop	...	...	2	...	
Springs { main	...	1	4	...	
Tappets, lever, trigger	...	1	...	1 to 5	
Triggers	...	1	1	...	
Wedges	...	1	...	...	
IMPLEMENTS.					
Brushes, sponge, without rod	1 per gun	...	...	...	
Rods, brush, sponge	1 per 2 or less number of guns	...	...	...	N.O. / 3107
Cans, oil	1 ,,	...	...	...	
Drifts { brass	1 ,,	...	...	...	
Drifts { steel	1 ,,	...	...	...	

* For Mark I limber only. † For Mark II limber only.

Digitized by Google

Equipment of Nordenfelt, Q.F., 3-pr. Gun, Mark I, on Travelling Carriages—*continued.*

57
Gen. No.
2599

TABLE 14—*continued.*	Proportions.	Components.	Spare.		Remarks.
			Per gun.	To number of guns or less per work.	
Woolwich Store Charge, No. 16—continued.					
Ordnance, Q.F., Nordenfelt, 3-pr., Mark I—*continued.*					
Drivers, screw (double ended)	1 per gun	...	...	...	
Hammers	1 ,,	...	...	...	
Tommies	1 ,,	...	...	...	
Sights { fore	...	1	...	1 to 5	
Sights { tangent (with range strip)	...	1	...	1 to 5	
Woolwich Store Charge, No. 17.					
Clamps, tangent sight, Q.F., Nordenfelt, 3-pr.	...	1	...	1 to 5	
Woolwich Store Charge, No. 18.					
57 Gen. No. 2784 57 24 1769 57 I. of W. 1143					
Covers, breech, Q.F., 3-pr. ...	1 per gun	...	...	...	
Ropes, drag, light ... pairs	1 ,,	...	...	...	
Tampeon, Q.F., 3-pr.	1 ,,	...	...	...	
Woolwich Store Charge, No. 23.					
Gauge, cartridge, Q.F., 3-pr. chamber, low	1 per sub-district	...	...	...	For gauging the cartridge before firing.
Lanyards, Q.F., 3-pr., Nordenfelt	2 per gun	...	...	...	

Digitized by Google

EQUIPMENT OF HOTCHKISS, Q.F., 3-PR. GUN, MARK I*, ON ELASTIC FRAME STANDS.

57
Gen. No.
4554

TABLE 15.

	Proportions.	Components.	Spare. Per gun.	Spare. To number of guns or less per work.	Remarks.
Woolwich Store Charge, No. 14.					
Pivots, Q.F., 3-pr., Hotchkiss (Mark II)	As authorised	...	...	...	
Pivot—*					
Capsquares, metal { left ... ... right... ...	... ...	1 1	... ...	... ...	
Pivots, metal	...	1	...	...	
Screws, steel { capsquare ... ... clamping capsquare, with handle ... holding down pivot ...	... ...	3 1 1	... ...	... 1 to 5 1 to 5	
Washers, steel, friction ...	...	1	...	...	
Wedges, steel, for shield, with set screw ... { left ... right ...	... ...	1 1	... ...	... ...	
Shield—					
Pins, steel, stays supporting, with collar and split key	...	2	...	...	
Shield, steel, without fittings	...	1	...	...	
Stays, steel, supporting shield, with collar and nut	...	2	...	...	
Plates, base, elastic frame stand, Q.F., 3-pr.	As authorised	...	...	...	
Plates, steel { anchoring ... base	... ...	1 1	... ...	... ...	
Bolts, holding down	...	8	...	...	
Stand, frame, elastic, Q.F., 3-pr. (Mark I)	As authorised	...	...	...	
Bolts, hexagon head with nuts	...	14	...	...	
Screws { hexagon head ... securing pivot ...	... ...	10 1	... ...	... ...	
Stands, iron, elastic, with fixed metal bush	...	1	...	...	
Woolwich Store Charge, No. 16.					
Boxes, spare parts and implements, Q.F. Hotchkiss, 3-pr.	1 per gun	...	...	...	
Ordnance, Q.F. Hotchkiss, 3-pr., Mark I*	As authorised	...	...	...	
Buffer tubes	...	...	...	1 to 10	
Bushes, plate, wedge... ...	...	...	2	...	
Cranks	...	1	...	1 to 5	
Crank-handles	...	1	...	1 to 10	
Extractors	...	1	1	...	
Hammers, firing	...	1	1	...	

57
24
1781

57
Sts. Setts.
3093

* One spare pivot is allowed to each station abroad, to be held in Army Ordnance charge.

Digitized by Google

Equipment of Hotchkiss, Q.F., 3-pr. Gun, Mark I*, on Elastic Frame Stands—*continued.*

57
Gen. No. 4554

TABLE 15—*continued.*

	Proportions.	Components.	Spare. Per gun.	Spare. To number of guns or less per work.	Remarks.
Woolwich Store Charge, No. 16—continued.					
Ordnance, Q.F., Hotchkiss, 3-pr., Mark I*—*continued.*					
Hooks, drill	...	...	1	...	
Pins, firing	...	...	6	...	
Plates, wedge	...	...	...	1 to 5 or less number of wedges allowed	For guns fitted with interchangeable wedge plates.
Rocking shafts...	...	1	...	1 to 10	
Screws { pivot, trigger ...	...	...	1	...	
Screws { set, crank-handle	...	...	1	...	
Screws { stop, wedge ...	...	1	1	...	
Screws { trigger-guard, fixing	...	...	3	...	
Shoulder-pieces	...	1	...	1 to 10	
Springs { crank-handle ...	...	...	1	...	
Springs { main	...	1	4	...	
Springs { trigger-sear ...	...	1	2	...	
Studs, shoulder-pieces { fixing ...	...	1	...	1 to 10	
Studs, shoulder-pieces { steadying	...	1	...	1 to 10	
Triggers	...	1	...	1 to 5	
Trigger-guards...	...	1	...	1 to 5	
Trigger-sears	...	1	1	...	
Wedges { steel, with wedge plate	...	1	...	1 to 10	For guns fitted with interchangeable wedge plates.
Wedges { steel	...	1	...	1 to 10	For guns not fitted with interchangeable wedge plate
IMPLEMENTS.					
N.O. 3107 Brushes, sponge, without rod	1 per gun	...	...	...	
Cans, oil	1 per gun	...	...	...	
Drivers, screw	1 ,,	...	...	...	
Extractors, hand	1 ,,	...	...	...	
Rods, brush, sponge	1 per 2 or less number of guns	...	...	...	
Tommies	1 ,,	...	...	...	For dismounting.
Sights { fore, Hotchkiss, 3-pr.	...	1	...	1 to 5	
Sights { tangent, Hotchkiss, 3-pr. (with range strip)	...	1	...	1 to 5	
Woolwich Store Charge, No. 17.					
Clamps, tangent sight, Q.F., Hotchkiss, 3-pr.	...	1	...	1 to 5	
Woolwich Store Charge, No. 18.					
Covers, breech, Q.F., 3-pr. ...	1 per gun	...	...	...	

Digitized by Google

TOOLS, ORDNANCE.

TABLE 16.	Proportions.	Remarks.
TOOLS, ORDNANCE.		
Tools for cleaning, examination, painting, and lacquering Q.F. guns ... ... sets	1 per district	For detail of tools, *see* Table A, pages 140 to 145.

AMMUNITION, &c., FOR HOTCHKISS AND NORDENFELT QUICK-FIRING ORDNANCE.

TABLE 17.	Proportions.	Remarks.
Boxes ammunition, quick-firing	6-pr. 11 / 3-pr. 16	46 per gun. / 32 ,,	
Boxes cartridge cases, quick-firing, saluting *	6-pr. ... / 3-pr. ...		
Boxes cartridges, quick-firing, saluting, tools *	6-pr. ... / 3-pr. ...		
Cartridges, quick-firing† 6-pr. steel shell	253 ,,		57
Cartridges, quick-firing† 6-pr. common shell	253 ,,		Gen. No.
Cartridges, quick-firing† 3-pr. steel shell	256 ,,		4696
Cartridges, quick-firing† 3-pr. common shell	256 ,,		
Primers, 6-pr. or 3-pr. ...	... ...	In boxes, tool.	
Cartridges, quick-firing, saluting† Cases 6-pr. / 3-pr.	... ...	Solid drawn, 20 in a box.	
Cartridges, quick-firing, saluting† Shalloon, 6-pr. or 3-pr.			
Cartridges, quick-firing, saluting† Wads felt 6-pr. / 3-pr.	... ...	In boxes, tool.	
Cartridges, quick-firing, saluting† Wads paper 6-pr. / 3-pr.			
Cases, powder, metal lined, half † ...	... ...	To contain saluting cartridges.	
Clips, cartridge, quick-firing 6-pr. / 3-pr.	506 per gun. / 512 ,,	1 issued on the base of each cartridge.	1 / 4696
Tools, cartridge, quick-firing, saluting * drivers, screw primer rods, 12·7-inch ...			

* Saluting ammunition will only be used when specially authorised. 75

† Empty cases are always to be cleaned as soon as possible after firing. *See* paragraph 412, Magazine Regulations, 1894. 12

The service cases, when dry, are to be repacked, together with the clips, in the boxes in which they were supplied, and returned into store. The fired cases are not, on any account, to be repacked in boxes containing unfired cartridges. 4221

The saluting cases, after being dried, will be reprimed and replaced in the box.

Note.—The above table applies to Mark III ammunition only.

6-pr. and 3-pr. ammunition will only be issued in complete boxes.

Boxes are on no account to be opened to make up issues.

Digitized by Google

GUNS, GARDNER, 2-BARREL, 0·4-INCH AND 0·45-INCH, AND GUNS, NORDENFELT, 3-BARREL, M.H. CHAMBER, ON CARRIAGES PARAPET, MACHINE GUN, 0·4-INCH; AND CARRIAGE, FIELD MACHINE GUN, INFANTRY, NORDENFELT, 3-BARREL.

	TABLE 18.	Proportions.	Remarks.
	Woolwich Store Charge, No. 13.		
	Carriages, field, machine gun, infantry, Nordenfelt, 3-barrel	As authorised	Also Gardner, 2-barrel.
	Cans, lubricating, No. 9	1 per carriage.	
	SPARE PARTS.		
38407 Equipt. 1469	**Keys** flat, L-head with chains, stud, and split key	2 per carriage.	
	Keys split, round, 2-in. × 1·625-in. ...	2 ,,	
	Keys loop head 2-in. × 1·125-in. ...	2 ,,	
	Nuts, shaft bolt	2 ,,	
38407 Equipt. 1631	**Pads,** felt, ammunition box ...	6 ,,	
	Pins ammunition box, with chain	2 ,,	
	Pins linch, 3rd class	1 ,,	
	Screws, set, pedestal	1 ,,	
	Ties linch pin, leather	2 ,,	
	Ties pin, ammunition box ...	2 ,,	
	Washers, drag, 3rd class	1 ,,	
	Woolwich Store Charge, No. 18.		
	Ropes, drag, light, carriage, field, machine gun, infantry pairs	1 per carriage.	
57 Ceylon 708	INTRENCHING TOOLS.		
	Woolwich Store Charge, No. 2.		
57 Dover 3088	**Axes** felling, curved helves ...	1 per carriage.	
	Axes pick, heads, 6½-lb.	1 ,,	
	Axes pick, helves, 34½ inches ...	1 ,,	
	Spades, N.P.	2 ,,	
	Woolwich Store Charge, No. 16.		
57 Gen. No. 3927	**Chests,** Gardner, 0·45 inch, 2-barrel* field mounting pack transport gun, M.H. ...	1 per gun.	
	Chests, Gardner, 0·45 inch, 2-barrel* field mounting pack transport gun, M.H. ...	1 ,, ...	For field mounting, infantry.
	Chests, Gardner, 0·45 inch, 2-barrel* trail boxes ...	1 ,, ...	For two, and two cartridge-holder boxes, mule equipment.
57 Gen. No. 3927	**Plugs,** Gardner, 0·45 inch, 2-barrel, field mounting, pack transport*	2 ,, ...	For naves of wheels.
	Carriages, parapet, machine gun, 0·4 inch†	As authorised	Also 0·45 inch. With 1 small tool case.
	SPARE PARTS.		
	Screws, clamping	1 per carriage.	
	Springs brake	2 ,,	
	Springs traversing handle ...	1 ,,	

* For transport and storage purposes.

† 1 pair of light drag ropes allowed for each mounting at Hong Kong.

Digitized by Google

Machine Guns—*continued.*

TABLE 18—*continued.*	Proportions.	Remarks.
Woolwich Store Charge, No. 16—cont.		
IMPLEMENTS.		
Spanners, shifting	1 per carriage.	
Tommies	2 ,,	
Chests, Gardner, 0·45 inch, 2-barrel* — crosshead	1 per gun	For parapet mounting. 52 / Gen. No. / 3927
Chests, Gardner, 0·45 inch, 2-barrel* — gun, parapet, mounting	1 ,,	
Chests, Gardner, 0·45 inch, 2-barrel* — stem	1 ,,	For parapet mounting.
Plugs, Gardner, 0·45 inch, 2-barrel, parapet mounting*	2 per gun	For naves of wheels.
Guns, Gardner, 2-Barrel, 0·4-inch.	As authorised	With 1 Cartridge-feeder, 60 Cartridge-holders in 3 Cartridge-holder Boxes, and 1 Stop-off Block, for parapet carriage.
SPARE PARTS.		
Barrels	1 per gun.	
Extractors	4 ,,	
Hammers	1 ,,	
Handles, crank	1 ,,	
Locks — left	1 ,,	
Locks — right	1 ,,	
Pins — extractor	4 ,,	
Pins — firing	4 ,,	
Reflectors, mirror, machine guns	1 per 5 or less number of guns per work, or 1 per 5 guns allotted to general defence purposes in a district.	57 / Gen. No. / 3042
Sights — fore	1 per gun.	
Sights — tangent	1 per gun.	
Springs — lock	4 ,,	
Springs — tangent sight	1 ,,	
IMPLEMENTS.		
Drifts — 6-in. × 11/16-in.	1 per gun.	
Drifts — 6-in. × 7/16-in.	1 per gun.	
Drifts — 6-in. × 9/32-in.	1 per gun.	
Plugs, clearing, Mark II	1 per gun.	
Punches — 5/32-in.	1 per gun.	
Punches — 3/16-in.	1 per gun.	
Rods, cleaning	1 per gun.	
Spanners	1 per gun.	
Twisters, barrel	1 per gun.	
Guns, Gardner, 2-Barrel, 0·45-inch.	As authorised	M.H., with 1 Cartridge-feeder, 1 Stop-off block, and 96 Cartridge-holders (for carriage, field, infantry), and 60 Cartridge-holders, in 3 Cartridge-holder Boxes (for parapetcarriages).

* For transport and storage purposes.

Digitized by Google

Machine Guns—*continued.*

TABLE 18—*continued.*	Proportions.	Remarks.
Woolwich Store Charge, No. 16—cont.		
SPARE PARTS.		
Barrels	1 per gun.	
Cartridge feeder	1 ,, ...	For carriage field infantry
Extractors	4 ,,	
Hammers	1 ,,	
Handles-crank		
Locks left		
Locks right		
Pins extractor	4 ,,	
Pins firing		
Pins joint for crosshead ...	1 ,, ...	For field carriages only.
Pins joint for elevating screw		
57 Gen. No. 3042 **Reflectors**, mirror, guns, machine	1 per 5 or less number of guns per work, or 1 per 5 guns allotted to general defence purposes in a district	
Sights fore	1 per gun	
Sights tangent		
Springs, lock...	4 ,,	
Springs, tangent sight	1 ,,	
IMPLEMENTS.		
Drifts, 6-in. × $\frac{11}{16}$-in.		
Drifts, 6-in. × $\frac{7}{16}$-in.		
Drifts, 6-in. × $\frac{3}{32}$-in.		
Plugs, clearing, Mark II		
Punches $\frac{5}{32}$-in.	1 per gun.	
Punches $\frac{1}{16}$-in.		
Rods, cleaning		
Spanners		
Twisters, barrel		
Guns, Nordenfelt, 8-Barrel, M.H. chamber	As authorised.	
SPARE PARTS.		
Barrels	1 per gun.	
Distributors		
Extractors	3 ,,	
Feed-guides	1 ,,	
Hammers	3 ,,	
Hopper-catches	1 ,,	
Levers, hand		
Pins, firing	3 ,,	
57 Gen. No. 3042 **Reflectors**, mirror	1 per 5 guns or less number of guns per work, or 1 per 5 guns allotted to general defence purposes.	
Sights fore	1 per gun.	
Sights tangent		
Springs lock	6 ,,	
Springs tangent sight	1 ,,	
Springs trigger comb	2 ,,	

Digitized by Google

Machine Guns—*continued.*

TABLE 18—*continued.*	Proportions.	Remarks.
Woolwich Store Charge, No. 16—cont.		
IMPLEMENTS.		
Boxes, spare parts and tools ...	1 per gun.	
Cans, oil		
Drifts	2 ,,	
Drivers, screw	1 ,,	
Plugs, clearing		
Rods, cleaning		
Chests, Nordenfelt, 0·45-inch, 3-Barrel* { feed boxes / gun ...	1 per gun.	

57
Gen. No.
3927

* For transport and storage purposes.

GUNS, MAXIM, ·303-INCH AND M.H. CHAMBER, 0·45-INCH. ON CARRIAGE PARAPET, MACHINE GUN, MAXIM AND CARRIAGE, FIELD, MACHINE GUN, INFANTRY, MAXIM AND CONE MOUNTING FOR ·303-INCH.

54
Arty.
2662

TABLE 19.	Proportions.	Remarks.
Woolwich Store Charge, No. 13.		
Carriage, field, machine gun, infantry, Maxim	As authorised.	With two tin boxes, two leather pockets, one water and one leather cover. § 8205 L. of C.
Cans, lubricating, No. 9	1 per carriage.	
Woolwich Store Charge, No. 16.		
Belts, ammunition { ·303-in. ... ... / M.H. chamber, 150 rounds ...	16 per carriage.	54 Arty. 2662
	16 ,,	
Boxes. belt, ammunition, Maxim, No. 2	16 ,,	
SPARE PARTS.		38407 Equipt. 1469
Bolts, with nuts, securing top shield.	1 per carriage.	
Keys { split, loop-head { ·2-in. × 1·75-in. ... / ·25-in. × 2·5-in. ... / ·15-in. × 1·75-in. ... / ·1875-in. × 1·75-in.	2 ,,	38407 Equipt. 1496
Nuts, 1-inch, bolt, bracket pivot ...	1 ,,	
Pins { joint { crosshead ... ... / elevating gear, with spring split pin ...	1 ,,	Carried in leather pocket.
	1 ,,	
linch, 3rd class	1 ,,	
taper { ·1875-in. × 1·625-in. / ·2-in. × 2-in. ...	2 ,,	... 1496
Propsticks, complete		
Shafts { No. 29 ... ... / ,, 28, with slat and pin, and chain for securing slat	1 per 4 carriages.	
Springs { catch, securing carrier... / flat, clamp, traversing...	1 per carriage.	... 1496
Ties, linch pin	2 ,,	
Washers, drag, 3rd class	1 ,,	

Digitized by Google

Machine Guns—*continued.*

TABLE 19—*continued.*

		Proportions.	Remarks.
	IMPLEMENTS.		
	Woolwich Store Charge, No. 8.		
	Spanners, McMahon, 12-inch ...	1 per carriage.	
51 Ceylon 708	*Woolwich Store Charge, No. 18.*		
	Ropes, drag, light, carriage, field, machine gun, infantry pairs	1 per carriage.	
	INTRENCHING TOOLS.		
	Woolwich Store Charge No. 2.		
57 Dover 3088	**Axes** { felling, curved helve ...	1 per carriage.	
	pick { heads, 6½-lb.... ...	1 ,,	
	helves, 34½ inches...	1 ,,	
	Spades, N.P.	2 ,,	
	Woolwich Store Charge No. 16.		
54 Arty. 2662	**Carriages,** parapet, machine gun, Maxim	As authorised.	With leather holder for spare joint pins.
	Belts, ammunition, { ·303 inch	8 per parapet carriage.	
54 M. Guns 17	M.H. chamber, Maxim rounds	250 4 ,,	
	Boxes, belt, ammunition, Maxim, No. 1. (Mark II)	4 ,,	
	SPARE PARTS.		
	Pins { joint, crosshead	1 per parapet carriage.	Carried in leather holder.
	joint, elevating gear, with spring split pin	1 ,,	
	linch	1 ,,	
	Screws, stop	2 ,,	
	Thongs, leather	1 ,,	
54 Arty. 2662	**Washers,** drag...	1 ,,	
	Mountings, cone, Maxim	As authorised.	
54 Arty. 2662	**Belts,** ammunition, { ·303-in.	8 per mounting.	
	M.H. chamber, Maxim rounds	250 4 ,,	
54 Arty. 2662	**Boxes,** belt, ammunition, Maxim No. 1		
	Shields	1 ,,	
	SPARE PARTS.		
	Pins, joint { crosshead	1 per mounting.	
	elevating gear, with spring split pin ...	1 ,,	
	Screws { set, nut, pins, joint crosshead	1 ,,	
	keeper, sleeve	1 ,,	
	spring, handle, clamping	1 ,,	
	Springs { stop, brake	1 ,,	
	handle, clamping ...	1 ,,	
	M.H. chamber gun ...	1 per gun.	
	·303-in. gun	1 ,,	For parapet carriages and cone mountings.
54 Arty. 2662	ammunition boxes ...	1 ,,	
	Chests, Maxim* { ammunition belts ...	1 ,,	For Field carriages.
	crosshead	1 ,,	For parapet carriages.
	stem	1 ,,	
	cone mounting	1 ,,	For cone mountings.
	shield	1 ,,	

* For transport and storage purposes.

Digitized by Google

Machine Guns—*continued.*

TABLE 10—*continued.*	Proportions.	Remarks.	
Woolwich Store Charge, No. 16—continued.			77
Plugs, Maxim* left	1 per gun.	For naves of wheels.	6
right			2821
Guns, Maxim M.H. chamber (·45 inch)	As authorised.		54
·303 inch			Arty.
Barrels (with side plates and asbestos packing)	1 per gun.		2662
			54
			Arty.
Boxes implements	1 ,,		2662
spare parts and tools ...	1 ,,		
Chains, fuzee	2 ,,	For attaching fuzee spring to fuzee.	57
Corks, plug†	2 ,,		Londonderry
Feed-blocks	1 ,,		200
Handles, crank			17
Gibs	2 ,,		
Levers, extractor ... left ... right	1 ,,		16
			1912
Locks			77
Pins axis lock, spring	2 ,,		6
sear	2 ,,		2763
trigger	2 ,,		
tumbler...	4 ,,		
firing	2 ,,		
fixing axis pin	24 ,,		
chain, fuzee ...	2 per fuzee chain.		
extractor, spring	4 per gun.		
Plugs cork, barrel, casing, complete	1 per 2 guns.		54
			Arty.
Reflectors, mirror, machine gun ·45 inch ...	1 per 5 or less number of guns per work, or 1 to 5 guns allotted to general defence purposes in a district.‡		2662
·303 ,, ...			
Sears	1 per gun.		
Sights fore			
tangent			
Springs buffer	4 ,,		
connecting rod	2 ,,		
cover	4 ,,		
cover lock	2 ,,		
ejecting tube			
extractor			
feed block...	4 ,,		
feed block slide	4 ,,		
fuzee	2 ,,		
gib			
lock...	4 ,,		
safety catch	2 ,,		
sear...			
shutter			
side plate...			
tangent sight			
tangent sight slide ...			
trigger bar			
Tumblers	1 ,,		
Triggers			

* For transport and storage purposes.

† For renewal of plugs, cork, barrel casing. 52

‡ At Malta 1 per battalion is allowed when rmament machine guns are in infantry charge. Malta

Digitized by Google

Machine Guns—*continued.*

TABLE 19—*continued.*	Proportions.	Remarks.
Woolwich Store Charge, No. 16—continued.		
IMPLEMENTS.		
Bags, water and nozzle, with cap and chain	1 per gun.	
Balance, spring		
Drivers, screw { bent ... ... large ... ... small		
Funnels		
Keys, { M.H. chamber (·45-inch) gib { ·303-in. gun-metal valve ...		
Pliers, cutting ... ...pairs.		
Plugs { belt, Maxim { M.-H. chamber (·45-inch)	1 to 5 or less number of guns.	For opening pockets of ammunition belts.
Plugs { belt, Maxim { ·303-inch ...		
Plugs { clearing, Maxim { M.-H. chamber* (·45-inch)	1 per gun.	
Plugs { clearing, Maxim { ·303-inch ...		
Punches (Nos. 1, 2, 3 and 4) ...	4 ,,	
Rods, cleaning	1 ,,	
Spanners, shifting		
Tools, belt, repairing...		
Vessels, water		
Wrenches, pin...		
ARTICLES FOR REPAIR.		
Boxes, tin strip, eyelet, &c. ...	2 per gun.	
Eyelets, for repairing feed belts ...	500 ,,	
Strips { long	50 ,,	
Strips { short	100 ,,	
Packings, Asbestos { 11 inches long ...pieces	2 ,,	
Packings, Asbestos { 5 yards long ... ,,	1 ,,	

54 Arty. 2662 — 54 Arty. 2662 — 17 — 16 — 1912

AMMUNITION FOR 0·4-INCH AND 0·45-INCH GARDNER, 3-BARREL, NORDENFELT, AND 0·45-INCH, AND ·303-INCH MAXIM GUNS.

TABLE 20.	Proportions.	Remarks.
Cartridges { machine gun, ball, 0·4-inch	10,200 rounds per gun	15 complete boxes.
Cartridges { small arm, ball { M.-H. rifle, solid case (·45-inch M.H. chambered guns)	10,440 ,, ,,	18 ,, ,,
Cartridges { small arm, ball { ·303-inch cordite ...	11,000 ,, ,,	10 ,, ,,

54 Arty. 2662

* A certain number of the earlier issues of these guns are allowed two clearing plugs, one of Mark I and one of Mark II. Those of later issues are supplied with the Mark II only.

Digitized by Google

TABLE 21.

	Proportions (per piece).																			Remarks.
	Movable.										Mobile.									
	B.L. Guns.		R.B.L. Guns.		R.M.L.						R.B.L. Guns.		R.M.L. Guns.							
					Guns.		Howitzers.													
							8-inch.									7-pr.*				
	5-inch.	4-inch.	40-pr.	20-pr.	40-pr.	25-pr.	70-cwt.	46-cwt.	6·6-inch.	6·3-inch.	12-pr.	9-pr.	16-pr.	13-pr.	9-pr.	200-lb.	150-lb.	2·5 inch.*		
Woolwich Store Charge, No. 2.																				
Axes, felling, curved helve ...	1	1	...	...	1	1	...	...	...	...	...	...	1	1	1	1	1	1		
Buckets, water, G.S., leather...	1	1	1	1	1	1	1	1	1	1	1	1	1	1	1	...	...	...		To hold water for damping the sponge, &c.
Colours { camp	2	2	2	2	2	2	2	2	2	2	2	2	2	2	2	...	...	...		For laying out the line of fire.
Colours { camp, Cases... ...	2	2	2	2	2	2	2	2	2	2	2	2	2	2	2	...	...	...		
Hooks, bill...	1	1	1	1	1	1	1	1	1	1	1	1	1	1	1	...	...	...		
Implements, intrenching ...	...	...	...	...	...	...	...	...	...	...	...	...	...	...	...	2	2	2		
Lamps, tracing†	2	2	...	...	2	2	2	2	2	2	...	...	...	...	...	...	...	...		
Mauls, G.S.	1	1	1	...	1	1	1	1	1	1	...	...	...	...	...	...	...	...		
Posts { picket, 5 feet	2	2	2	...	2	2	2	2	2	2	...	...	...	...	...	...	...	...		
Posts { ,, 2½ ,, ...	...	...	2	...	2	2	...	...	...	...	...	...	...	...	...	...	...	...		For Clerk's platforms.

* If required for Mountain or Colonial service they should be equipped with the details in Part 3—*War*, or with such portions of that equipment as may be considered necessary for the particular service for which they are required.

† Oil and wick for these supplied by Army Service Corps, as required.

Digitized by Google

57
Gen. No.
5043

Equipment of Guns and Howitzers for Movable Armaments—*continued.*

TABLE 21—*continued.*

	Proportions (per piece).																		
	Movable.										Mobile.								
	B.L. Guns.		R.B.L. Guns.		R.M.L.						R.B.L. Guns.		R.M.L. Guns.						Remarks.
					Guns.		Howitzers.												
							8-inch.									7-pr.*			
	5-inch.	4-inch.	40-pr.	20-pr.	40-pr.	25-pr.	70-cwt.	46-cwt.	6·6-inch.	6·3-inch.	12-pr.	9-pr.	16-pr.	13-pr.	9-pr.	200-lb.	150 lb.	2·5-inch.*	
Woolwich Store Charge, No. 2—continued.																			
Axes, pick { heads, 6½ lbs.	1	1	1	1	1	1	1	1	1	1	1	1	1	1	1	1	1	1	
helves, 34½ inches	1	1	1	1	1	1	1	1	1	1	1	1	1	1	1	1	1	1	
Rammers, earth	...	...	2	...	2	2	...	...	...	...	...	...	...	...	...	...	...	...	For use in laying Clerk's platforms.
Shovels, universal	1	1	1	1	1	1	1	1	1	1	1	1	1	1	1	...	...	...	
Spades, N.P.	1	1	1	1	1	1	1	1	1	1	1	1	1	1	1	...	...	...	
Horns, powder†	...	...	...	...	...	...	*i*	*i*	*i*	*i*	...	...	...	...	...	...	...	...	For priming guns if required.
Woolwich Store Charge, No. 4.																			
Carts‡ { hand, common ...	1	1	1	...	1	...	1	1	1	1	...	...	...	...	...	...	...	...	For supply of ammunition.
trench	1	1	1	...	1	...	1	1	1	1	...	...	...	...	...	...	...	...	For supply of projectiles, &c.
Limbers, sling wagon, 6 tons...	...	...	...	...	...	...	*g*	*g*	*g*	*g*	...	...	...	...	...	...	...	...	

Digitized by Google

	Ties, linch pin	20	20	20	20	20	20	20	20	20	20	20	20	20	20	20	...	...	...	
	Wagons, sling, 6 tons	...	...	...	...	...	...	*g*	*g*	*g*	*g*	...	...	...	...	...	...	...	...	
	Wheels, 2nd class A., No. 15 ...	...	...	...	...	...	...	...	...	...	...	*n*	*n*	...	...	...	...	...	...	
	Woolwich Store Charge, No. 5.																			
54	**Brushes**, water, carriage ...	2	2	2	2	2	2	2	2	2	2	2	2	2	2	2	2	2	2	For cleaning projectiles, &c.
Gen. No. 5646	**Harness**, General Service Bands, belly	...	...	...	...	...	...	...	...	...	...	...	...	...	...	...	...	...	...	1 for each carriage fitted for farmers' draught.
	Woolwich Store Charge, No. 7.																			
	Chests, tool, filled, special, repairing R.B.L. guns, land service	...	...	*k*	*k*	...	...	...	...	...	...	*k*	*k*	...	...	...	...	...	...	For repairing guns.
	Chests, tool, filled { No. 3 E.	*h*	*h*	...	...	*h*	*h*	*h*	*h*	*h*	*h*	...	...	*h*	*h*	*h*	...	...	...	{ *See* Appendix IX., pages 258 to 265.
	,, 3 G.	...	...	*h*	*h*	...	...	...	...	...	...	*h*	*h*	...	...	...	...	...	...	
	Cans, oil, lubricating { G.S.§	*a*	*a*	*a*	*a*	*a*	*a*	...	...	...	...	*a*	*a*	*a*	*a*	*a*	...	...	...	
	{ Smith's §	...	...	...	...	...	...	*d*	*d*	*d*	*d*	...	...	...	...	...	...	...	...	
	Drivers, screw, general service, 6-inch	1	1	1	...	...	...	1	1	1	1	...	...	...	...	...	...	...	...	
	Files, second cut, half round, 8-inch	1	1	1	1	...	...	1	1	1	1	...	...	...	...	...	...	...	...	} For general use.
	Hammers, claw { 28-oz.	1	1	1	1	1	1	1	1	1	1	...	...	...	...	...	...	...	...	
	{ 20-oz.	...‡	...	...	...	...	...	...	...	...	...	...	...	1	1	1	...	...	...	
	{ 14-oz.	...	...	...	...	...	...	...	...	...	...	1	1	...	...	...	1	1	1	
	Handles, file, small	1	1	1	...	...	...	1	1	1	1	...	...	...	...	...	...	...	...	
	Woolwich Store Charge, No. 8.																			
	Knives, clasp	1	1	1	1	1	1	1	1	1	1	1	1	1	1	1	1	1	1	
	Levels, F.S., 4 feet, Mark II. ...	*b*	*b*	*b*	...	*b*	*b*	*b*	*b*	*b*	*b*	...	...‡	...	...	...	...	...	...	

a. 1 per 2 pieces or less number. *b*. 1 per 3 pieces or less number. *d*. 1 per 6 pieces or less number.
g. 1 per district if necessary. *h*. 1 per district if necessary.
i. 1 per group of guns. *k*. 1 per group of guns where not provided for in para. 201.
n. 1 per 6 or less number of carriages, &c., using these wheels.

57 Cape 5043

* See footnote * on page 407. † Contains 1½-lbs. gunpowder.
‡ Where these are not available other means of transport will be adopted.
§ When these cans become unserviceable they will be replaced by "Can, lubricating No. 9."

Digitized by Google

Equipment of Guns and Howitzers for Movable Armaments—*continued.*

TABLE 21—*continued.*

	Proportions (per piece).																			
	Movable.										Mobile.									
	B.L. Guns.		R.B.L. Guns.		R.M.L.						R.B.L. Guns.		R.M.L. Guns.							Remarks.
					Guns.		Howitzers.													
							8-inch.									7-pr.*				
	5-inch.	4-inch.	40-pr.	20-pr.	40-pr.	25-pr.	70-cwt.	46-cwt.	6·6-inch.	6·3-inch.	12-pr.	9-pr.	16-pr.	13-pr.	9-pr.	200-lb.	150-lb.	2·5-inch. *		
Woolwich Store Charge, No. 8—continued.																				
Lines, carpenters...	1	1	1	...	1	1	1	1	1	1	...	...	...	...	...	...	...	...		
Pincers, carpenters ... pairs	1	1	1	1	1	1	1	1	1	1	1	1	1	1	1	...	...	...		
Plummets, howitzer†	1	1	1	...	1	1	1	1	1	1	...	...	...	...	...	...	...	...		
Punches, R.B.L. guns, steel { 13 inches...	...	...	1	...	...	...	...	...	...	...	...	...	...	...	...	...	...	...	}	For removing keep-pins, &c.
Punches, R.B.L. guns, steel { 6 ,, ...	...	...	...	1	...	...	...	...	...	...	1	1	...	...	...	...	...	...	}	For removing keep-pins, &c.
Reels, carpenters line	1	1	1	...	1	1	1	1	1	1	...	...	...	...	...	...	...	...		
Spanners, McMahon { 15-inch	1	1	1	1	1	1	1	1	1	1	1	1	1	1	1	...	...	...	}	For tightening nuts, &c.
Spanners, McMahon { 9 ,,	...	...	...	...	...	...	...	...	...	...	...	...	...	...	...	1	1	1	}	For tightening nuts, &c.
TOOLS, ORDNANCE.																				
Tools, cleaning, examining, painting, and lacquering rifled ordnance ... ... sets	*g*	*g*	*g*	*g*	*g*	*g*	*g*	*g*	*g*	*g*	*g*	*g*	*g*	*g*	*g*	*g*	*g*	*g*		According to the nature of ordnance in the district. For detail, *see* pages 140 to 145, Table A.

Digitized by Google

	Woolwich Store Charge, No. 10.																				
	Covers, vent R.B.L.	...	...	1	1	...	...	...	...	...	...	1	1	...	...	...	...	...	To protect vent slots and sights.
	R.M.L.	...	...	...	...	...	...	...	...	...	...	...	...	...	...	...	1	1	1	
54	**Jacks,** lifting general service	...	...	...	...	...	...	...	...	...	...	*a*	*a*	*a*	*a*	*a*	...	...	For general use.
Artillery	screw, Clerk's...	*a*	*a*	*a*	*a*	*a*	*a*	*a*	*a*	*a*	*a*	...	...	...	...	...	...	...	...	
1367	**Locks,** pad, iron small	...	...	...	...	...	...	...	...	...	...	2	...	...	...	...	...	...	For axletree boxes.
	Plates, wheel, platform, siege	2	2	...	...	...	...	2	2	2	2	...	...	...	...	...	...	...	
	Tarpaulins, 20 feet × 10 feet...	...	...	...	...	...	...	...	...	...	...	...	...	...	...	...	...	...	2 per group of guns.
	Woolwich Store Charge, No. 11.																				
	Chalk, white ... ... oz.	4	4	4	...	4	4	4	4	4	4	...	...	...	...	...	...	...	
	Oil, mineral ... ...galls.	...	...	...	...	...	...	...	...	...	...	...	...	...	...	...	...	...	Sufficient to fill hydraulic buffers.
	Woolwich Store Charge, No. 13.																				
	Carriages, field R.B.L. ...	...	...	...	1	...	...	...	...	...	...	1	1	...	...	...	...	...	...		
	R.M.L. ...	...	...	...	...	...	...	...	...	...	...	...	...	1	1	1	1	1	...		
	Cartouches R.B.L. ...	...	...	...	2	...	...	...	...	...	...	2	2	...	...	...	...	...	...		
	R.M.L. ...	...	...	...	...	...	...	...	...	...	...	...	...	1	1	1	...	...	...		
	Clippers, portfire... ...	...	...	...	...	...	...	...	...	...	...	...	...	...	...	...	...	...	1 per group of guns.		
57	**Handspikes,** No. 4 ...	...	...	...	1	...	...	...	...	...	...	1	1	...	...	...	...	...	...		
Gen. No.	traversing ,, 6 ...	...	...	...	...	...	...	...	...	...	...	...	...	...	...	...	1	...	...		
6358	,, 7	...	...	...	...	...	...	...	...	...	...	...	...	...	1	...	...	...	...		
	,, 8	...	...	...	...	...	1	...	...	...	...	...	...	1	...	1	...	...	...		
	Limbers, field R.B.L. 20-pr. carriage	...	...	...	1	...	...	...	...	...	...	...	...	...	...	...	...	...	...		
	20-pr. wagon	...	...	...	1	...	...	...	...	...	...	...	...	...	...	...	...	...	...		
	12-pr. carriage	...	...	...	...	...	...	...	...	...	...	1	...	...	...	...	...	...	...		
	12-pr. wagon	...	...	...	...	...	...	...	...	...	...	1	...	...	...	...	...	...	...		
	9-pr. carriage	...	...	...	...	...	...	...	...	...	...	...	1	...	...	...	...	...	...		
	9-pr. wagon	...	...	...	...	...	...	...	...	...	...	...	1	...	...	...	...	...	...		
	R.M.L., 16-pr. ...	...	...	...	...	...	...	...	...	...	...	...	...	2	...	...	...	...	...	1 for carriage, and 1 for ammunition wagon.	

a. 1 per 2 pieces or less number.

g. 1 per district if necessary where not provided for in para. 201.

* See footnote * on page 407.

† When the existing stock of these is used up, "plummets laying" will be issued.

Digitized by Google

Equipment of Guns and Howitzers for Movable Armaments—*continued.*

TABLE 21—*continued.*

	Proportions (per piece).																		Remarks.
	Movable.										Mobile.								
	B.L. Guns.		R.B.L. Guns.		R.M.L.						R.B.L. Guns.		R.M.L. Guns.						
					Guns.		Howitzer.												
							8-inch.									7-pr.*			
	5-inch.	4-inch.	40-pr.	20-pr.	†40-pr.	25-pr.	70-cwt.	46-cwt.	6·6-inch.	6·3-inch.	12-pr.	9-pr.	16-pr.	13-pr.	9-pr.	200-lb.	150-lb.	2·5-inch.*	
Woolwich Store Charge, No. 13—continued.																			
Limbers, field R.M.L. 13-pr. carriage	...	...	...	...	...	...	...	...	...	...	...	...	..	1	...	...	...	...	1 for carriage, and 1 for ammunition wagon.
R.M.L. 13-pr. wagon	...	...	...	...	...	...	...	...	...	...	...	...	...	1	...	...	...	...	
R.M.L. 9-pr.	...	...	...	...	...	...	...	...	...	...	...	...	...	...	2	...	...	...	1 spare per group of guns for the spare ammunition wagon.
... ...	...	...	...	...	...	...	...	...	...	...	...	...	...	...	...	...	...	...	
Pins, linch, 2nd class, steel ...	1	1	1	1	1	2	1	1	1	1	1	1	1	1	1	...	...	...	Spare.
Shafts No. 1	i	i	i	i	i	i	i	i	i	i	i	i	i	i	i	...	...	...	
,, 2	...	...	...	i	...	...	...	...	...	...	i	i	...	...	...	...	...	...	
,, 19†	...	...	...	...	...	i	...	...	...	...	...	...	i	i	i	...	...	...	
Sticks, portfire	...	...	...	...	...	...	...	...	...	...	...	...	...	...	...	...	...	...	1 per group of guns. To hold lighted portfire.

Digitized by Google

| | | |

Equipment of Guns and Howitzers for Movable Armaments—*continued.*

57
Gen. No. 5043

TABLE 21—*continued.*

		Proportions (per piece).																		
		Movable.										Mobile.								Remarks.
		B.L. Guns.		R.B.L. Guns.		R.M.L.						R.B.L. Guns.		R.M.L. Guns.						
						Guns.		Howitzers.												
								8-inch.									7-pr.*			
		5-inch.	4-inch.	40-pr.	20-pr.	40-pr.	25-pr.	70-cwt.	46-cwt.	6·6-inch.	6·3-inch.	12-pr.	9-pr.	16-pr.	13-pr.	9-pr.	200-lb.	150-lb.	2·5-inch.*	
	Woolwich Store Charge, No. 14—continued.																			
Carriages, Siege, R.M.L.	8-inch 70 cwt. howitzer, central pivot	...	...	...	...	...	...	1	...	...	...	...	...	...	...	...	...	...	...	
	8-inch 46 cwt. howitzer, central pivot	...	...	...	...	...	...	...	1	...	...	...	...	...	...	...	...	...	...	
	6·6-inch howitzer, central pivot	...	...	...	...	...	...	...	...	1	...	...	...	...	...	...	...	...	...	
	6·3-inch howitzer, central pivot	...	...	...	...	...	...	...	...	...	1	...	...	...	...	...	...	...	...	
	40-pr., top, overbank... ...	...	...	...	...	1	...	...	...	...	...	...	...	...	...	...	...	...	...	
	25 ,, ,, ,, ...	...	...	...	...	...	1	...	...	...	...	...	...	...	...	...	...	...	...	
	Spanners { lock-nut ...	...	...	...	...	1	1	...	...	...	...	...	...	...	...	...	...	...	...	
	Spanners { small	...	...	...	...	1	1	...	...	...	...	...	...	...	...	...	...	...	...	
	Wrenches, knock-up... ...	...	...	...	...	1	1	...	...	...	...	...	...	...	...	...	...	...	...	
57 Portsmouth 2113	Cartouches { R.B.L.	...	...	2	...	...	...	...	...	...	...	...	...	...	...	...	...	...	...	
	Cartouches { R.M.L.	...	...	...	...	2	2	...	...	...	...	...	...	...	...	...	...	...	...	
	Cases { pricker, vent, siege, R.B.L., 40-pr. 6 ft.	...	...	1	...	...	...	...	...	...	...	...	...	...	...	...	...	...	...	
	Cases { parapet†																			
	Cases { vent-piece, R.B.L., 40-pr.	...	...	1	...	...	...	...	...	...	...	...	...	...	...	...	...	...	...	

Digitized by Google

| | | |

Equipment of Guns and Howitzers for Movable Armaments—*continued.*

57
Gen. No.
5043

TABLE 21—*continued.*

	Proportions (per piece).																		
	Movable.										Mobile.								
	B.L. Guns.		R.B.L. Guns.		R.M.L. Guns.		R.M.L. Howitzers.				R.B.L. Guns.		R.M.L. Guns.						Remarks.
							8-inch.									7-pr.*			
	5-inch.	4-inch.	40-pr.	20-pr.	40-pr.	25-pr.	70-cwt.	46-cwt.	6·6-inch.	6·3-inch.	12-pr.	9-pr.	16-pr.	13-pr.	9-pr.	200-lb.	150-lb.	2·5-inch.*	
Woolwich Store Charge, No. 14—continued.																			
Platforms, siege { Clerk's	...	...	1	...	1	1	...	...	...	...	...	...	...	...	...	...	...	...	
double-decked "C" pivot†	1	1	...	...	...	...	1	1	1	1	...	...	...	...	...	...	...	...	
Plugs, pivot, No. 17	...	...	...	...	...	...	1	1	1	1	...	...	...	...	...	...	...	...	
57 Gen. No. 2255 **Pockets,** extractor, tube P, B.L., 5-inch, travelling‡	1	1	...	...	...	...	...	...	...	...	...	...	...	...	...	...	...	...	
Rollers, shifting† { No. 1 ...	...	...	1	...	...	...	...	...	...	...	...	...	...	...	...	...	...	...	For wood siege carriages.
,, 2 ...	...	...	1	...	...	...	...	...	...	...	...	...	...	...	...	...	...	...	For iron 6-ft. parapet siege carriages.
,, 3 ...	...	...	...	...	...	...	1	...	...	...	...	...	...	...	...	...	...	...	
,, 4 ...	...	...	...	...	...	...	...	...	1	...	...	...	...	...	...	...	...	...	
,, 5 ...	...	...	...	...	1	...	...	...	...	...	...	...	...	...	...	...	...	...	
,, 6 ...	...	...	...	...	...	1	...	...	...	...	...	...	...	...	...	...	...	...	
,, 11 ...	1	...	...	...	...	...	...	...	...	...	...	...	...	...	...	...	...	...	
,, 12 ...	...	1	...	...	...	...	...	...	...	...	...	...	...	...	...	...	...	...	

Digitized by Google

Shafts	No. 16			*l*	*l*	*l*	...	*l*	...	*l*	*l*	*l*	*l*	...	...	...	...	...	...	...	...	
	,, 17			...	...	*l*	...	...	...	...	...	...	...	...	...	...	...	...	...	...	...	
	,, 20			*l*	*l*	*l*	...	*l*	...	*l*	*l*	*l*	*l*	...	...	...	...	..	...	...	...	
Shoes, drag				1	1	1	...	1	...	1*	1*	1	1	...	...	...	...	...	...	...	...	*2 per carriage for China, Malta, and Gibraltar.
Spanners	bolts, bearings,	No. 154 (cranked)		...	...	...	...	...	...	...	...	...	...	...	...	C	...	...	...	...	...	
	box, screw, elevating	No. 155 (plain)		...	...	...	...	...	...	...	...	...	...	...	...	C	...	...	...	...	...	
	hydraulic buffer			...	...	...	...	...	...	...	...	...	...	...	...	...	...	...	...	...	...	*See* Appendix XI, pages 278 to 292.
Straps, lifting,	R.B.L., 40-pr.			...	...	10	...	12	...	...	...	...	...	...	...	...	...	...	...	...	...	
projectile	R.M.L., 25-pr.			...	...	...	...	...	18	...	...	...	...	...	...	...	...	...	...	...	...	
Swingletrees, No 1				3	3	3	...	3	...	3	3	3	3	...	...	...	...	...	...	...	...	
Wagons, ammunition				...	...	...	...	...	1	...	...	...	...	...	...	...	...	...	...	...	...	
Wagon, platform, gun, R.M.L., 6·6-inch				...	...	...	...	...	...	...	...	...	...	...	...	...	...	...	...	...	...	1 per group of howitzers.
Washers, drag, 1st Class B				1	1	1	...	1	...	1	1	1	1	...	...	...	...	...	...	...	...	Spare.
Wheels	1st Class	A	No. 1	...	...	N	...	...	...	...	...	...	...	...	...	...	...	...	...	...	...	
		B	,, 6	...	...	...	...	N	...	N	N	N	N	...	...	...	...	...	...	...	...	
			,, 7	N	N	N	...	...	...	...	...	...	...	...	...	...	...	...	...	...	...	
	2nd Class A		,, 14	...	...	N	N	...	...	...	...	...	...	...	...	...	...	...	...	...	...	
Wrenches, pivot	No. 4			...	...	...	...	*a*	*a*	*a*	*a*	*a*	*a*	...	...	...	...	...	...	...	...	
	,, 5			*a*	*a*	...	...	...	...	...	...	...	...	...	...	...	...	...	...	...	...	
Woolwich Store Charge, No. 15.																						
Bearers, gun, breech, R.M.L.				...	...	...	...	...	...	...	...	...	...	...	...	...	...	...	2	2	...	
Boxes	fuze	No. 4		...	...	...	...	...	...	...	...	...	...	...	...	...	...	...	5	5	...	
		,, 5		...	...	...	...	...	...	...	...	...	...	...	...	...	...	...	...	...	12	
		,, 13		...	...	...	...	...	...	...	...	...	...	...	...	...	...	...	...	...	24	
	grease	3 lb.		*b*	*b*	*b*	*b*	*b*	*b*	*b*	*b*	*b*	*b*	*b*	*b*	*b*	*b*	*b*	...	...	...	
		1 ,,		...	...	...	...	...	...	...	...	...	...	...	...	...	...	...	1	...	...	

a. 1 per 2 pieces or less number. *b*. 1 per 3 guns or less number. C. 1 per 6 or less number.
l. 1 per 10 or less number of limbers, &c., using these shafts. N. 1 per 6 or less number of carriages, &c., using these wheels.
* *See* footnote * on page 407.
† To be kept in Ordnance Store, or Royal Artillery Charge for Army Ordnance Department, as best suit the requirements of each locality. To be demanded and laid for service by the Royal Engineers, but for instructional purposes of the Royal Artillery may be drawn and laid by them. ‡ Issued with the carriage.

5
D'port
2024

Digitized by Google

Equipment of Guns and Howitzers for Movable Armaments—*continued.*

57
Gen. No.
5043

TABLE 21—*continued.*

	Proportions (per piece).																		Remarks.
	Movable.										Mobile.								
	B.L. Guns.		R.B.L. Guns.		R.M.L.						R.B.L. Guns.		R.M.L. Guns.						
					Guns.		Howitzers.												
							8-inch.									7-pr.*			
	5-inch.	4-inch.	40-pr.	20-pr.	40-pr.	25-pr.	70-cwt.	46-cwt.	6·6-inch.	6·3-inch.	12-pr.	9-pr.	16-pr.	13-pr.	9-pr.	200-lb.	150-lb.	2·5-inch.*	
Woolwich Store Charge, No. 15—continued.																			
Boxes, pack, transport — Ammunition — Clarkson, R.M.L. — near	...	...	...	...	...	...	...	...	...	...	...	...	...	...	...	...	...	1	
Clarkson, R.M.L. — off	...	...	...	...	...	...	...	...	...	...	...	...	...	...	...	...	...	1	
leather, R.M.L. — 7-pr., 200 lb. common shell	...	...	...	...	...	...	...	...	...	...	...	...	...	...	...	25	25	...	
leather, R.M.L. — 2·5-inch — near	...	...	...	...	...	...	...	...	...	...	...	...	...	...	...	...	...	12	
leather, R.M.L. — 2·5-inch — off	...	...	...	...	...	...	...	...	...	...	...	...	...	...	...	...	...	12	
small store, R.M.L.	...	...	...	...	...	...	...	...	...	...	...	...	...	...	...	2	2	...	
sundries	...	...	...	...	...	...	...	...	...	...	...	...	...	...	...	...	...	2	
Carriages — field, R.M.L., 7-pr. 150-lb. shell	...	...	...	...	...	...	...	...	...	...	...	...	...	...	...	...	1	...	Gold Coast pattern.
Carriages — mountain, R.M.L.	...	...	...	...	...	...	...	...	...	...	..	...	...	...	...	1	1	1	
Carriages — mountain, R.M.L. spanners	...	...	...	...	...	...	...	...	...	...	...	...	...	...	...	...	...	2	
Cartouches, R.M.L. — 7-pr. pack transport, 200 lb., 8 cartridges	...	...	...	...	...	...	...	...	...	...	...	...	...	...	...	25	25	...	
Cartouches, R.M.L. — 2·5-in. 8 cartridges	...	...	...	...	...	...	...	...	...	...	...	...	...	...	...	...	...	25	
Handspikes, traversing, No. 5	...	...	...	...	...	...	...	...	...	...	...	...	...	...	...	...	...	1	

57
Gen. No.
6358

Digitized by Google

Holdalls, small stores, R.M.L.	...	...	...	...	...	...	...	...	...	...	...	...	...	...	...	1	1	1	
Lifters { carriage, R.M.L.	...	...	...	...	...	...	...	...	...	...	...	...	...	...	...	...	...	1	
Lifters { gun chase, R.M.L.	...	...	...	...	...	...	...	...	...	...	...	...	...	...	...	...	...	1	
Limbers, mountain, R.M.L., 7-pr., 200-lb.	...	...	...	...	...	...	...	...	...	...	...	...	...	...	...	1	...	...	When specially required.
Plates, clip, axletree, R.M.L., 2·5-in.	..	...	...	...	...	...	...	...	...	...	...	...	...	...	...	...	...	1	Spare.
Ropes, check, R.M.L., 2·5-in. and 7-pr. 200-lb., Mark II.	...	...	...	...	...	...	...	...	...	...	...	...	...	...	...	1	1	1	
Washers, drag, carriage	...	...	...	...	...	...	...	...	...	...	...	...	...	...	...	1	1	1	Spare.
Woolwich Store Charge, No. 16.																			
Chests, tool, empty (with tools shown in Appendix VIII.) facing R.B.L. guns 40-pr.	...	...	*g*	...	...	...	...	...	...	...	...	...	...	...	...	...	...	...	For repairing guns.
Chests, tool, empty (with tools shown in Appendix VIII.) facing R.B.L. guns 20-pr.	...	...	...	*g*	...	...	...	...	...	...	...	...	...	...	...	...	...	...	
Chests, tool, empty (with tools shown in Appendix VIII.) facing R.B.L. guns 12 or 9-pr.	...	...	...	...	...	...	...	...	...	...	*g*	*g*	...	...	...	...	...	...	
Ordnance { R.B.L.	...	...	1	1	...	...	...	...	...	...	1	1	...	...	...	...	...	...	
Ordnance { R.B.L., bolts, eye, elevating	...	...	...	1	...	...	...	...	...	...	1	1	...	...	...	...	...	...	
Plugs, vent	...	...	...	...	...	...	1	1	1	1	...	...	...	...	...	...	...	...	To protect the vent at home stations and in cold climates.
Sights, R.B.L. { fore ...	...	...	2	2	...	...	...	...	...	...	2	2	...	...	...	...	...	...	
Sights, R.B.L. { tangent ...	...	...	2	2	...	...	...	...	...	...	2	2	...	...	...	...	...	...	
Spikes, gun { common ...	2	2	2*a*	...	2	2	2	2	2	2	...	...	2	2	2	2	2	2	
Spikes, gun { spring { C ...	...	...	...	...	...	...	1	1	...	...	...	...	...	...	...	...	...	...	
Spikes, gun { spring { D ...	...	...	...	...	1	1	...	...	1	1	...	...	1	...	...	...	...	...	
Spikes, gun { spring { E ...	...	...	...	...	...	...	...	...	...	...	...	...	...	1	1	2	2	2	
Vent servers†	...	...	2*a*	...	2	2	2	2	2	2	...	...	...	...	...	...	...	...	To place in the vent while loading.
Woolwich Store Charge, No. 17.																			
Boxes, obturating pads { 5-in.	1	...	...	...	...	...	...	...	...	...	...	...	...	...	...	...	...	...	
Boxes, obturating pads { 4 ,,	...	1	...	...	...	...	...	...	...	...	...	...	...	...	...	...	...	...	
Clamps, tangent sight { A	...	...	2	...	...	...	...	...	...	...	...	...	...	...	...	...	...	...	
Clamps, tangent sight { B	...	...	...	...	...	...	2	1	2	1	...	...	...	...	...	...	...	...	
Clamps, tangent sight { D	...	...	...	...	2	2	...	...	...	...	...	...	...	...	...	...	...	...	

a. Side closing guns only.

* *See* footnote * on page 407.

g. 1 per district, if necessary, where not provided for in paragraph 201.

† Whipcord should be demanded separately for making the lanyards.

Digitized by Google

Equipment of Guns and Howitzers for Movable Armaments—*continued.*

57
Gen. No.
5043

TABLE 21—*continued.*

		Proportions (per piece).																			
		Movable.										Mobile.									
		B.L. Guns.		R.B.L. Guns.		R.M.L.						R.B.L. Guns.		R.M.L. Guns.							Remarks.
						Guns.		Howitzers.													
								8-inch.									7-pr.*				
		5-inch.	4-inch.	40-pr.	20-pr.	40-pr.	25-pr.	70-cwt.	46-cwt.	6·6-inch.	6·3-inch.	12-pr.	9-pr.	16-pr.	13-pr.	9-pr.	200-lb.	150-lb.	2·5-inch.*		
Woolwich Store Charge, No. 17—continued.																					
Clamps, tangent. sight	Automatic A ...	1	1	...	...	...	...	...	...	...	...	...	...	...	...	...	...	...	...		
	R.M.L. 2·5-inch ...	...	...	...	...	...	...	...	...	...	...	...	...	...	...	...	...	...	2		
	Reciprocating, R.M.L., 2·5-inch	...	...	...	...	...	...	...	...	...	...	...	...	...	...	...	...	...	1		
Ordnance	B.L.†	1	1	...	...	...	...	...	...	...	...	...	...	...	...	...	...	...	...		
	R.M.L.	...	...	...	...	1	1	1	1	1	1	...	...	1	1	1	1	1	1		
	Fittings.																				
57 Gen. No. 5600	bolts, cascable, elevating ...	...	...	...	...	...	...	...	...	...	...	...	...	1	1	1	...	...	...		1 spare to 6 guns or less numbers.
	screws, set, socket, sight, tangent	...	...	...	...	...	...	...	...	...	...	...	...	...	...	...	1	1	...		
38407 Equipt. 1631	R.M.L., 2·5-inch: brackets, tangent, sight, reciprocating	...	...	...	...	...	...	...	...	...	...	...	...	...	...	...	...	...	1		Spare.
	R.M.L., 2·5-inch: bars, shifting	...	...	..	...	...	...	...	...	...	...	...	..	...	...	...	...	...	1		
	R.M.L., 2·5-inch: guards, trunnion ..	...	...	...	...	...	...	...	...	...	...	...	...	...	...	...	...	...	1		
	R.M.L., 2·5-inch: hammers	...	...	...	...	...	...	...	...	...	...	...	...	...	...	...	...	...	1		
	R.M.L., 2·5-inch: levers, gas-ring ...	...	...	...	...	...	...	...	...	...	...	...	...	...	...	...	...	...	1		

Digitized by Google

Ordnance, R.M.L., 2·5-inch	protectors, sight ring	...	...	...	...	...	...	...	...	...	...	...	...	...	...	...	...	...	1	Spare.
	rings: adjusting	...	...	...	...	...	...	...	...	...	...	...	...	...	...	...	...	...	1	
	rings: gas	...	...	...	...	...	...	...	...	...	...	...	...	...	...	...	...	...	2	
	rings: retaining gas ring	...	...	...	...	...	...	...	...	...	...	...	...	...	...	...	...	...	2	
	screws, preserving, fore sight	...	...	...	...	...	...	...	...	...	...	...	...	...	...	...	...	...	3	
Prickers, vent	17-inch	...	...	...	...	...	...	1	1	...	...	...	...	...	...	...	...	...	...	To clear the vent.
	12 ,,	...	...	1*a*	...	1	1	...	...	1	1	...	...	...	...	...	...	...	...	
	7½ ,,	...	...	...	...	...	...	...	...	...	...	...	...	1	1	1	1	1	1	
Punches, vent	12-in.	...	...	...	...	...	...	...	1	...	...	...	...	...	...	...	...	...	...	
	8-in.	...	...	1*a*	...	1	1	1	...	1	1	...	...	1	1	1	...	...	...	
Sights, R.M.L., B.L.	fore, E	...	1	1	...	...	...	...	...	...	...	...	...	...	...	...	...	...	...	
	tangent	...	1	1	...	...	...	...	...	...	...	...	...	...	...	...	...	...	...	
	telescopic, 5-in.	...	1	1	...	...	...	...	...	...	...	...	...	...	...	...	...	...	...	
Sights, R.M.L.	crossbar: fore	...	...	...	...	...	...	2	1	2	1	...	...	...	...	...	...	...	...	
	crossbar: tangent	...	...	...	...	...	...	2	1	2	1	...	...	...	...	...	...	...	...	
	fore: B	...	...	...	...	2	2	...	...	...	...	...	...	...	...	...	...	...	...	
	fore: 16-pr.	...	...	...	...	...	...	...	...	...	...	...	...	2	...	...	...	...	...	
	fore: 2·5-in.	...	...	...	...	...	...	...	...	...	...	...	...	...	...	...	...	...	2	
	muzzle	...	...	...	...	...	...	...	...	...	...	...	...	...	1	1	1*c*	...	...	
	tangent: ...	...	...	...	...	2	2	...	...	...	...	...	...	2	2½	2½	...	...	...	
	tangent: 7-pr. 200 lbs. 12°	...	...	...	...	...	...	...	...	...	...	...	...	...	...	...	1	...	...	
	tangent: spare 8°	...	...	...	...	...	...	...	...	...	...	...	...	...	...	...	1*c*	...	...	
	tangent: 7-pr. 150 lbs. 20°	...	...	...	...	...	...	...	...	...	...	...	...	...	...	...	...	1	...	
	tangent: spare 8°	...	...	...	...	...	...	...	...	...	...	...	...	...	...	...	...	1*c*	...	
	2·5-in. reciprocating	...	...	...	...	...	...	...	...	...	...	...	...	...	...	...	...	...	1	
Wrenches, sight, R.M.L.	muzzle	...	...	...	...	...	...	...	...	...	...	...	...	...	...	1	...	...	...	
	16-pr.	...	...	...	...	...	...	...	...	...	...	...	...	1	...	...	...	...	...	
	13-pr.	...	...	...	...	...	...	...	...	...	...	...	...	...	1	...	...	...	...	
Woolwich Store Charge, No. 18.																				
Bags, extractor, projectile, 9-in.		...	...	...	...	...	...	*b*	*b*	*b*	*b*	...	...	...	...	...	...	...	...	To cover the head.
Bearers, gun, breech, R.M.L.		...	...	...	...	...	...	...	...	...	...	...	...	...	...	...	...	...	1	
Blocks, wood, snatch, 10-inch		...	...	*b*	...	...	...	*b*	*b*	*b*	*b*	...	...	...	...	...	...	...	...	

a. Side closing gun only.
* See footnote * on page 407.
long and 1 short.

b. 1 per 3 pieces or less number.
† For special implements and appurtenances, *see* pages 464 and 465.

c. per 2 guns.

57
3
6747

Digitized by Google

Equipment of Guns and Howitzers for Movable Armaments—*continued.*

57
Gen. No. 5043

TABLE 21—*continued.*

	Proportions (per piece).																		Remarks.
	Movable.										Mobile.								
	B.L. Guns.		R.B.L. Guns.		R.M.L. Guns.		R.M.L. Howitzers.				R.B.L. Guns.		R.M.L. Guns.						
	5-inch.	4-inch.	40-pr.	20-pr.	40-pr.	25-pr.	8-inch. 70-cwt.	8-inch. 46-cwt.	6·6-inch.	6·3-inch.	12-pr.	9-pr.	16-pr.	13-pr.	9-pr.	7-pr.* 200-lb.	7-pr.* 150-lb.	2·5-inch.*	
Woolwich Store Charge, No. 18—continued.																			
Brushes, piasaba — B.L. bore	*i*	*i*	...	...	...	...	...	...	...	...	...	...	...	...	...	...	...	...	For cleaning out the grooves.
Brushes, piasaba — R.B.L.	...	...	*i*	*i*	...	...	...	...	...	...	*i*	*i*	...	...	...	...	...	...	
Brushes, piasaba — R.M.L.	...	...	...	...	*i*	*i*	*i*	*i*	*i*	*i*	...	...	*i*	*i*	*i*	*i*	*i*	*i*	
Caps, sponge† — No. 2	...	...	...	...	...	...	...	...	...	...	...	...	...	...	...	...	...	1	To protect sponge heads.
Caps, sponge† — ,, 3	...	...	...	...	...	...	...	...	...	...	1	1	...	...	1	1	1	...	
Caps, sponge† — ,, 4	...	...	...	...	...	...	...	...	...	...	...	...	1	1	...	...	...	...	
Caps, sponge† — ,, 5	...	...	...	1	...	1	...	...	...	...	...	...	...	...	...	...	...	...	
Caps, sponge† — ,, 7	...	...	1	...	1	...	...	...	...	...	...	...	...	...	...	...	...	...	
Caps, sponge† — ,, 8	...	...	...	...	...	...	...	...	...	1	...	...	...	...	...	...	...	...	
Caps, sponge† — ,, 9	...	...	...	...	...	...	...	...	1	...	...	...	...	...	...	...	...	...	
Caps, sponge† — ,, 10	...	...	...	...	...	...	1	1	...	...	...	...	...	...	...	...	...	...	
Cases, cartridge — No. 2	...	...	...	...	...	...	2	2	...	...	...	...	...	...	...	...	...	...	To bring up filled cartridges to gun in action.
Cases, cartridge — ,, 4	...	...	2	...	2	2	...	...	2	2	...	...	...	..	...	...	...	...	
Cases, cartridge — ,, 5	...	...	...	2	...	...	...	...	...	...	...	...	...	...	...	...	...	...	
Cases, cartridge — ,, 25	2	2	...	...	...	...	...	...	...	...	...	...	...	...	...	...	...	...	
Coatings, sponge, R.B.L.	...	...	‡	‡	...	...	...	...	...	...	...	...	...	...	...	...	...	...	Spare for sponge head.

Digitized by Google

Cordage	hawser, 3-strand, tarred, $1\frac{1}{2}$-inch fms.	12	12	12	...	12	12	12	12	12	12	...	...	...	...	...	...	...	...	For lashing skids, &c.
	tarred, spun yarn, hemp, 2-thread lbs.	2	2	2	...	2	2	2	2	2	2	...	...	...	...	...	...	...	...	General purposes.
Covers, breech		1	1	...	...	...	...	...	...	...	...	...	...	...	...	...	...	...	...	
Extractors, projectile, R.M.L.		...	...	...	...	...	...	*b*	*b*	*b*	*b*	...	...	...	...	...	...	...	...	
Lines, Hambro'		1	1	1	1	1	1	1	1	1	1	1	1	1	1	1	1	1	1	
Marline ... ... lbs.		1	1	1	1	1	1	1	1	1	1	1	1	1	1	1	1	1	1	
Rammers	B.L.	1	1	...	...	...	...	...	...	...	...	...	...	...	...	...	...	...	...	
	R.B.L.	...	...	1	1	...	...	...	...	...	...	1	1	...	...	...	...	...	...	
	R.M.L.	...	...	...	...	1§	1§	1	1	1	**	...	...	**	**	**	**	**	**	
Ropes	drag { heavy... pairs	1	1	1	1	1	1	1	1	1	...	...	...	...	...	...	...	...	...	
	drag { light ... „	...	...	...	...	...	...	...	...	...	...	1	1	1	1	1	1	1	1	
	parbuckling, 12 fathoms	...	...	*b*	...	...	...	*b*	*b*	*b*	*b*	...	...	...	...	...	...	...	...	For general purposes.
Selvagees, ordinary		1	1	1	...	1	1	1	1	1	1	...	...	...	...	...	...	...	...	
Sponges	R.B.L...	...	...	1	1	...	...	...	...	...	...	1	1	...	...	...	...	...	...	
	R.M.L.	...	...	...	...	1††	1††	1	1	1	1	...	...	1	1	1	1	1	1	
Staves, end, B.L....		*a*	*a*	...	...	...	...	...	...	...	...	...	...	...	...	...	...	...	...	
Tackles, luff, 14 fathoms ...		2	2	2	...	2	2	2	2	2	2	...	...	...	...	...	...	...	...	For shifting the gun, &c.
Tampeons	B.L.	1	1	...	...	...	...	...	...	...	...	...	...	...	...	...	...	...	...	
	R.B.L. { breech	...	...	1	1	...	...	...	...	...	...	...	...	...	...	...	...	...	...	
	R.B.L. { muzzle	...	...	1	1	...	...	...	...	...	...	1	1	...	...	...	...	...	...	
	R.M.L.	...	...	...	...	1	1	1	1	1	1	...	...	1	1	1	1	1	1	
Twine, packing, small ... lbs.		1	1	1	1	1	1	1	1	1	1	1	1	1	1	1	...	...	...	
Wadhooks, R.M.L.	8-inch, 70 cwt., howitzer	...	...	...	...	...	...	*m*	...	...	...	...	...	...	...	...	...	...	...	For drawing the charge and searching the bore.
	8-inch, 46 cwt., howitzer	...	...	...	...	...	...	...	*m*	*m*	*m*	...	...	...	...	...	...	...	...	
	40-pr.	...	...	...	...	*m*	...	...	...	...	...	...	...	...	...	...	...	...	...	
Worms, wadhook	No. 4	...	...	...	...	...	...	...	...	...	...	...	...	...	...	...	...	...	1	
	„ 5	...	...	...	...	...	...	...	...	...	...	...	...	*m*	*m*	*m*	1	...	...	
	„ 6	...	...	...	...	...	...	...	...	...	...	...	...	...	...	...	...	1	...	
	„ 9	...	...	...	...	...	*m*	...	...	...	...	...	...	...	...	...	...	...	...	

a. 1 per piasaba brush.
b. 1 per 3 pieces or less number.
i. 1 per group of guns.
m. 1 per 3 pieces or less number. If more are required for drill they must be collected from other pieces.
* See footnote * on page 407. † Only to be used for sponges in transit or where stores are damp, or when kept in the open.
‡ 1 per 100 rounds of ammunition. § Jointed if with top carriage.
** Rammers are on the sponge stave, and are provided with worms, except for the 6·3-inch howitzers, which are provided with wadhook. †† Wire rope stave if used with top carriage.

Digitized by Google

Equipment of Guns and Howitzers for Movable Armaments—*continued.*

TABLE 21—*continued.*

	Proportions (per piece).																		
	Movable.										Mobile.								
	B.L. Guns.		R.B.L. Guns.		R.M.L.						R.B.L. Guns.		R.M.L. Guns.						Remarks.
					Guns.		Howitzers.												
							8-inch.									7-pr.*		*	
	5-inch.	4-inch.	40-pr.	20-pr.	40-pr.	25-pr.	70-cwt.	46-cwt.	6·6-inch.	6·3-inch.	12-pr.	9-pr.	16-pr.	13-pr.	9-pr.	200-lb.	150-lb.	2·5-inch.	
Woolwich Store Charge, No. 19.																			
Rollers, Planks, ground moving guns — 6 ft. × 12 in.	...	...	2	...	2	2	..	...	...	...	...	...	...	...	...	...	...	...	For Clerk's platforms.
Rollers, Planks, ground moving guns — half 6 „ × 12 „	1	1	1	...	1	1	1	1	1	1	...	...	...	...	...	...	...	...	For moving and mounting guns.
Rollers, Planks, ground moving guns — half 4 „ × 12 „	1	1	1	...	1	1	1	1	1	1	...	...	...	...	...	...	...	...	
Rollers, Planks, ground moving guns — whole, 10 „ × 17 „ fir	2	2	2	...	2	2	2	2	2	2	...	...	...	...	...	...	...	...	
Rollers, Planks, ground moving guns — 3 ft. × 6 in. diameter	1	1	1	...	1	1	1	1	1	1	...	...	...	...	...	...	...	...	For mounting and dismounting, &c.
Rollers, Planks, ground moving guns — 2½ „ × 5 in. diameter Sabicu	...	...	...	...	...	...	2	2	2	...	...	...	...	...	...	...	...	...	
Rollers, Planks, ground moving guns — 20 in. × 5 in. diameter	...	...	...	...	...	...	2	2	...	...	...	...	...	...	...	...	...	...	For shifting to platform wagon.
Rollers, Planks, ground moving guns — 14 „ × 5 „ „	...	...	...	...	...	...	...	...	1	...	...	...	...	...	...	...	...	...	
Scotches — large	4	4	4	...	4	4	4	4	4	4	...	...	...	...	...	...	...	...	For general purposes.
Scotches — medium ...	4	4	4	...	4	4	4	4	4	4	...	...	...	...	...	...	...	...	
Scotches — small	4	4	4	...	4	4	8	8	8	4	...	...	...	...	...	...	...	...	
Skids — 3 ft. × 9 in × 6 in.	...	...	...	...	...	...	...	...	...	...	...	...	...	...	...	...	...	...	6 per group of guns. For mounting and dismounting, &c.
Skids — 3 „ × 6 „ × 5 „	...	...	...	...	...	...	...	...	...	...	...	...	...	...	...	...	...	...	6
Skids — 3 „ × 6 „ × 3 „	...	...	...	...	...	...	...	...	...	...	...	...	...	...	...	...	...	...	6
Skids — 3 „ × 5 „ × 4 „	...	...	1†	...	1†	1†	...	...	...	...	...	...	...	...	...	...	...	...	6
Skids — dismounting — 14 ft. × 8 in. sq. prs.	...	...	...	...	...	...	...	...	...	...	...	...	...	...	...	...	...	...	2
Skids — dismounting — 14 ft. × 5½ in. sq. prs.	...	...	...	...	...	...	...	...	...	...	...	...	...	...	...	...	...	...	2

Digitized by Google

| | | |

Equipment of Guns and Howitzers for Movable Armaments—*continued.*

TABLE 21—*continued.*

	Proportions (per piece).																			Remarks.
	Movable.										Mobile.									
	B.L. Guns.		R.B.L. Guns.		R.M.L.						R.B.L. Guns.		R.M.L. Guns.							
					Guns.		Howitzers.													
							8-inch.									7-pr.*				
	5-inch.	4-inch.	40 pr.	20-pr.	40-pr.	25-pr.	70-cwt.	46-cwt.	6·6-inch.	6·3-inch.	12-pr.	9-pr.	16-pr.	13-pr.	9-pr.	200-lb.	150-lb.	2·5-inch.*		
Woolwich Store Charge, No. 21—continued.																				
Cartridges, R.M.L., filled silk cloth: 40-pr., $6\frac{3}{4}$ lb. R.L.G.[4] ...	}																			
25 ,, $4\frac{1}{2}$,, ,, ...																				
16 ,, 3 ,, 3 oz. R.L.G.[4]																				
13 ,, $3\frac{1}{4}$,, R.L.G.[4] ...																				
9 ,, $1\frac{3}{4}$,, R.L.G.[2] ...																				
7 ,, 12 oz. R.F.G. ...																				
7 ,, 6 ,, ,, ...																				
2·5 inch, 1 lb. 10 oz. R.L.G.[4]																				
shalloon: 7-pr., 4 oz. R.F.G.[2]																				
2·5 inch, 6 oz. R.F.G.[2]																				
	1 per round of ammunition.																			
	1 per round of ammunition, common and shrapnel shell and case shot.																			
	1 per round of star shell.																			
Woolwich Store Charge, No. 22.																				
Bits, vent, Armstrong	...	...	*c*	*c*	...	...	...	...	...	...	*c*	*c*	...	...	...	...	...	...		For removing irregularities in the vent.

Digitized by Google

38407 Equipt. 1533	**Boxes**, tube, garrison	...	...	1	1	...	...	...	...	...	...	1	1	...	...	...	...	...	...	Per 100 rounds.
	Cups, R.B.L. guns: 40-pr....	...	...	†	...	...	...	...	...	...	...	...	...	...	...	...	...	...	...	
	40-pr., side closing...	...	...	*k*	...	...	...	...	...	...	...	...	...	...	...	...	...	...	...	
	20-pr....	...	...	...	†	...	...	...	...	...	...	...	...	...	...	...	...	...	...	
	12-pr....	...	...	...	...	...	...	...	...	...	...	†	†	...	...	...	...	...	...	
	Extractors: tin, crosshead...	...	...	1 *l*	...	...	...	...	...	...	...	...	...	...	...	...	...	...	...	
	Extractors: cup, hook ...	...	...	1‡	1‡	...	...	...	...	...	...	1‡	1‡	...	...	...	...	...	...	
	Fuzes§ percussion: breechloading, plain, No. 2	...	...	...	90	...	...	...	...	...	...	50	50	...	...	...	...	...	...	
	Fuzes§ percussion: direct action, No. 3, (Mark II)	45	...	...	...	...	...	40	40	40	80	...	...	...	...	...	...	...	...	
	Fuzes§ percussion: R.L., No. 7	...	...	90	...	45	45	...	...	...	...	...	...	24	24	24	26	26	...	
57 B'dos 2571	**Fuzes**§ percussion: small, No. 8	...	45	...	...	...	...	...	...	...	...	...	...	...	...	...	...	...	26	
	Fuzes§ time: Armstrong, E, No. 22 ...	...	...	...	45	...	...	...	...	...	...	46	46	...	...	...	...	...	...	
	Fuzes§ time: sensitive, long, No. 23...	...	...	...	...	...	...	20	20	20	...	...	...	...	...	...	...	...	...	
	Fuzes§ time: sensitive, middle, No. 24	...	...	...	...	...	...	20	20	20	...	...	...	...	...	...	...	...	...	
	Fuzes§ time: 15 seconds, M.L., No. 41	...	...	...	...	...	45	...	...	...	...	...	...	72	...	72	60	60	...	
	Fuzes§ time: 15 seconds, with special priming, No. 42	...	...	...	...	...	...	10	10	10	10	...	...	...	...	...	5	5	5	
	Fuzes§ time: 15 seconds, with detonator, No. 43	...	...	20	...	45	...	...	...	...	...	...	...	...	72	...	...	...	...	
	Fuzes§ time: and percussion, middle, No. 54	45	...	...	...	...	...	...	...	...	...	...	...	...	...	...	...	...	...	
	Fuzes§ time: and percussion, short, No. 55	...	45	...	...	...	...	...	...	...	...	...	...	...	100‖	...	...	...	60	
	Implements, fuze and shell: Bits, hook borer, Mark III	...	...	6	...	6	6	6	6	6	6	6	6	6	6	6	6	6	6	
	Implements, fuze and shell: Cylinders, common ...	...	...	1	...	1	1	1	1	1	1	1	1	1	1	1	1	1	1	
	Implements, fuze and shell: Drifts, G.S....	...	...	...	*a*	...	...	...	...	...	...	*a*	*a*	...	*a*	*a*	...	...	...	
	Implements, fuze and shell: Drivers, screw, Shrapnel, large	*a*	...	...	...	*a*	*a*	*a*	*a*	*a*	*a*	...	...	*a*	*a*	*a*	...	...	...	
	Implements, fuze and shell: Extractors, fuze, small, rifled	...	...	*a*	...	*a*	*a*	*a*	*a*	*a*	*a*	*a*	*a*	*a*	*a*	*a*	*a*	*a*	*a*	
	Implements, fuze and shell: Handles, hook borer ...	...	...	1	...	1	1	1	1	1	1	1	1	1	1	1	1	1	1	
	Implements, fuze and shell: Hooks, G.S. wad	...	...	...	*a*	...	...	...	...	...	...	*a*	*a*	...	*a*	*a*	...	..	...	
	Implements, fuze and shell: Hooks, hook borer ...	...	...	1	...	1	1	1	1	1	1	1	1	1	1	1	1	1	1	

a. 1 per 2 pieces or less number
k. 1 per round.
* *See* footnote * on page 407.
† With practice ammunition only.
‡ For practice guns only.
c. 1 per 4 pieces or less number.
l. Side closing guns only.
§ The designation number is shown on the label of the cylinder or other package in which the fuze is packed. The number stamped on the fuze itself denotes the number of the thousand manufactured.
‖ For the 13-pr. guns at Malta.

Digitized by Google

57
Gen. No.
5043

Equipment of Guns and Howitzers for Movable Armaments—*continued.*

TABLE 21—*continued.*

	Proportions (per piece).																		Remarks.
	Movable.										Mobile.								
	B.L. Guns.		R.B.L. Guns.		R.M.L.						R.B.L. Guns.		R.M.L. Guns.						
					Guns.		Howitzers.												
							8-inch.									7-pr.*			
	5-inch.	4-inch.	40-pr.	20-pr.	40-pr.	25-pr.	70-cwt.	46-cwt.	6·6-inch.	6·3-inch.	12-pr.	9-pr.	16-pr.	13-pr.	9-pr.	200-lb.	150-lb.	2·5 inch.*	
Woolwich Store Charge, No. 22—continued																			
Implements, fuze and shell — Keys — fuze and plug, G.S.†	...	...	1	1	1	1	...	...	...	...	1	1	1	1	1	1	1	...	
Keys — fuze, universal	2	1	...	...	...	...	2	2	2	2	...	...	...	...	...	...	...	1	The second key required when the Mark III Direct Action fuzes are used.
Pincers, Shrapnel primer	*a*	...	...	...	*a*	*a*	*a*	*a*	*a*	*a*	...	...	*a*	*a*	*a*	...	...	...	
Wrenches, base plug ...	...	...	...	...	1	...	1	1	1	1	...	...	...	...	...	...	...	...	
Lanyards — cocking	1	1	...	...	...	...	..	...	...	...	...	...	...	...	...	...	...	...	
friction tube — field	...	...	...	...	...	...	..	...	...	...	3	3	3	3	3	3	3	3	
friction tube — siege — No. 1 ...	...	...	3	3	3	3	3	3	3	3	...	...	...	...	...	...	...	...	
friction tube — siege — ,, 2 ...	...	3	...	...	...	...	...	...	...	...	...	...	...	...	...	...	...	...	
Key, fuze and plug... ...	...	...	...	...	...	...	...	..	...	...	...	...	...	...	...	3	3	3	
Match, slow ... ... lbs.	...	...	...	...	...	...	...	..	...	...	...	...	...	...	...	...	...	...	1 per group of guns for lighting portfires.
Plugs, wood, covered with serge	...	...	...		...	...	...	...	...	...	46	46	...	...	...	...	...	...	1 per segment shell.

Digitized by Google

Pockets fuze and hook borer	1	1	1	1	1	1	...	...	...	...	1	1	1	1	1	1	1	1		
Pockets tin cup	...	...	1	1	...	...	...	...	...	...	1	1	...	...	...	...	...	...		
Pockets tube { land service	...	...	1‡	...	1	1	1	1	1	...	...	...	1	1	1	1	1	1		
Pockets tube { vent sealing	1	1	...	...	...	...	...	...	...	...	...	...	...	...	...	...	...	...	For percussion vent sealing tubes.	
Portfires, common	...	...	...	...	...	...	...	...	...	...	...	...	...	...	...	...	...	...	2 per group of guns for firing signal rockets.	
Primers Shrapnel shell ...	...	...	...	...	...	...	...	...	...	...	...	...	...	...	...	...	...	...	1 per empty Shrapnel shell.	
Primers vent piece	...	...	*k*	...	...	...	...	...	...	...	...	...	...	...	...	...	...	...		
Rockets signal, 1 lb., service	...	...	...	...	...	...	...	...	...	...	...	...	...	...	...	...	...	...	20 per group of guns.	
Rockets sticks, 8′ 2″ ...	...	...	...	...	...	...	...	...	...	...	...	...	...	...	...	...	...	...	1 per signal rocket.	
Straps, tube box, long	1	1	3§	2	1	1	1	1	1	1	2	2	1	1	1	1	1	1		
Tubes friction, copper, solid drawn	...	...	*k*‖	*k*	...	...	...	...	...	...	*k*	*k*	...	...	...	...	...	...		
Tubes friction, copper, solid drawn, with ball	...	...	...	...	*k*	*k*	*k*	*k*	*k*	*k*	...	...	*k*	*k*	*k*	*k*	*k*	*k*		
Tubes vent, sealing, percussion ...	*k*	*k*	...	...	...	...	...	...	...	...	...	...	...	...	...	...	...	...		
Woolwich Store Charge, No. 24.																				
Bearers, shot { 8-inch howitzer	...	...	...	...	...	...	1	1	...	...	...	...	...	...	...	...	...	...	For carrying projectiles.	
R.M.L. { 6·6-inch ,,	...	...	...	...	...	...	...	...	1	...	...	...	...	...	...	...	...	...		
Boxes, pack, transport, ammunition, wood, shell, R.M.L., 2·5-inch	...	...	...	...	...	...	...	...	...	...	...	...	...	...	...	...	...	1		
Gas-checks, R.M.L.	...	...	...	...	¶	...	¶	¶	¶	¶	...	...	...	...	...	...	...	...		
Gauges, shell, ring†† B.L. band { 5-inch high	...	...	...	...	...	...	...	...	...	...	...	...	...	...	...	...	...	...	1 per group of guns.	
Gauges, shell, ring†† B.L. band { 4 ,,	...	...	...	...	...	...	...	...	...	...	...	...	...	...	...	...	...	...		
Gauges, shell, ring†† B.L. body { 5-inch ...	...	...	...	...	...	...	...	...	...	...	...	...	...	...	...	...	...	...		
Gauges, shell, ring†† B.L. body { 4 ,, ...	...	...	...	...	...	...	...	...	...	...	...	...	...	...	...	...	...	...		
Gauges, shell, ring†† R.B.L. { 40-pr.	...	...	...	...	...	...	...	...	...	...	...	...	...	...	...	...	...	...		
Gauges, shell, ring†† R.B.L. { 20-pr.	...	...	...	...	...	...	...	...	...	...	...	...	...	...	...	...	...	...		
Gauges, shell, ring†† R.B.L. { 12- or 9-pr. ...	...	...	...	...	...	...	...	...	...	...	...	...	...	...	...	...	...	...		

a. 1 per 2 pieces or less number. *k.* 1 per round. * *See* footnote * on page 407.

† Will be replaced by the "Key, fuze, universal," as the present store becomes used up. ‡ Except 40-pr. side closing.

§ For 40-pr. side closing gun 2 only are required, viz.:—1 for tube box and 1 for tin cup pocket.

‖ For the 40-pr. R.B.L. side closing gun, the tube, friction, solid drawn, with ball, will be issued.

¶ 1 per shell, except star shell. †† The issue of low band gauges is not considered necessary.

Digitized by Google

TABLE 21—*continued.*

		Proportions (per piece).																		Remarks.
		Movable.										Mobile.								
		B.L. Guns.		R.B.L. Guns.		R.M.L.						R.B.L. Guns.		R.M.L. Guns.						
						Guns.		Howitzers.												
								8-inch.									7-pr.*			
		5-inch.	4-inch.	40-pr.	20-pr.	40-pr.	25-pr.	70-cwt.	46-cwt.	6·6-inch.	6·3-inch.	12-pr.	9-pr.	16-pr.	13-pr.	9-pr.	200-lb.	150-lb.	2·5-inch.*	
Woolwich Store Charge, No. 24—continued.		...	...	...	...	...	...	...	...	...	...	...	...	...	...	...	...	...	...	
Gauges,† shell ring, R.M.L.	body and gas-checks: 8-inch howitzer, 70 cwt.	...	...	...	...	...	...	...	...	...	...	...	...	...	...	...	...	...	...	1 per group of howitzers.
	body and gas-checks: 6·6-inch howitzer	...	...	...	...	...	...	...	...	...	...	...	...	...	...	...	...	...	...	
	body and gas-checks: 6·3-inch howitzer	...	...	...	...	...	...	...	...	...	...	...	...	...	...	...	...	...	...	
	body and gas-checks: 13-pr.	...	...	...	...	...	...	...	...	...	...	...	...	...	...	...	...	...	...	1 per group of guns.
	body and stud: 8-inch, 46 cwt.	...	...	...	...	...	...	...	...	...	...	...	...	...	...	...	...	...	...	1 per group of howitzers.
	body and stud: 40-pr.	...	...	...	...	...	...	...	...	...	...	...	...	...	...	...	...	...	...	
	body and stud: 25-pr.	...	...	...	...	...	...	...	...	...	...	...	...	...	...	...	...	...	...	
	body and stud: 16-pr.	...	...	...	...	...	...	...	...	...	...	...	...	...	...	...	...	...	...	
	body and stud: 9-pr.	...	...	...	...	...	...	...	...	...	...	...	...	...	...	...	...	...	...	1 per group of guns.
Implements, fuze, and shell	Rectifiers, gas-check, R.M.L., 13-pr.	...	...	...	...	...	...	...	...	...	...	...	...	...	*a*	...	...	...	...	
	Spanners, gas-check plug	...	...	...	...	1	...	...	1	...	1	...	...	...	...	...	...	...	...	

Digitized by Google

Plugs, fuze-hole	G.S.	with loop	...	...	1	...	1	1	...	...	...	...	...	...	1	1	1	1	1	1	Per shell.
		without loop	1	1	...	...	...	...	1	1	1	1	...	...	...	...	...	...	...	...	
	R.B.L.		...	...	...	1	...	...	...	...	...	...	1	1	...	...	...	...	...	...	
Shells‡	B.L., filled	common ..	45	45	...	...	...	...	...	...	...	...	...	...	...	...	...	...	...	...	Per 100 rounds.
		Shrapnel ...	45	45	...	...	...	...	...	...	...	...	...	...	...	...	...	...	...	...	
	R.B.L., filled	common ...	...	...	45	45	...	...	...	...	...	...	50	50	...	...	...	...	...	...	
		segment ...	...	...	45	45	...	...	...	...	...	...	46	46	...	...	...	...	...	...	
	R.M.L., filled	common ...	...	...	...	...	45	45	40	40	40	80	...	...	24	24§	24	26	26	26	
		Shrapnel ...	...	...	...	...	45	45	40	40	40	...	...	...	72	72§	72	60	60	60	
		star	...	..	...	...	...	...	10	10	10	...	...	...	...	...	...	5	5	5	
Shot ...	B L., case ...		10	10	...	...	...	...	...	...	...	...	...	...	...	...	...	...	...	...	Per 100 rounds.
	R.B.L., case ...		...	...	10	10	...	...	...	...	...	...	4	4	...	...	...	...	...	...	
	R.M.L. ,, ...		...	...	...	...	10	10	10	10	10	...	...	...	4	4	4	9	9	9	
Wads, fuze hole, G.S. ...			...	...	...	...	...	...	...	...	...	...	...	...	...	...	...	...	...	...	1 per empty common shell, not taking bag.
Stars, incendiary...			...	...	...	...	...	...	...	...	...	...	...	...	...	...	...	60	60	60	10 in a cylinder.
Woolwich Store Charge, No. 25.																					
Boxes, lantern, bull's-eye ...			...	...	...	...	...	...	1	1	1	1	...	...	...	...	...	...	...	...	
Brooms, bass	heads		1	1	1	...	1	1	1	1	1	1	...	...	...	...	...	...	...	...	For sweeping the platform, &c.
	handles... ...		1	1	1	...	1	1	1	1	1	1	...	...	...	...	...	...	...	...	
Cans, oil, feeding, ½-pint ...			...	...	...	...	...	...	...	...	...	...	...	...	...	...	...	1	1	1	
Caps, knee, musketry instruction			...	...	...	...	...	...	...	...	...	...	...	...	...	...	...	8	8	8	
Lanterns, bull's-eye‖			...	...	...	...	...	...	1	1	1	1	...	...	...	...	...	1	1	1*	
Scissors, lamp			...	...	...	...	...	...	...	...	...	...	...	...	...	...	...	...	...	...	1 per group of guns.
Woolwich Store Charge, No. 26.																					
Scales, weighing, powder, 8 lb.			...	...	...	...	...	...	*b*	*b*	*b*	*b*	...	...	...	...	...	...	...	...	
Weights	brass, 8 ounces ...		...	...	...	...	...	...	*b*	*b*	*b*	*b*	...	...	...	...	...	...	...	...	
	gunmetal	7 lbs.	...	...	...	...	...	...	*b*	*b*	*b*	*b*	...	...	...	...	...	...	...	...	
		4 ,,	...	...	...	...	...	...	*b*	*b*	*b*	*b*	...	...	...	...	...	...	...	...	
		2 ,,	...	...	...	...	...	...	*b*	*b*	*b*	*b*	...	...	...	...	...	...	...	...	
		1 ,,	...	...	...	...	...	...	*b*	*b*	*b*	*b*	...	...	...	...	...	...	...	...	

a. 1 per 2 pieces or less number. *b.* 1 per 3 pieces or less number.

* *See* footnote * on page 407.

† The issue of low band gauges is not considered necessary.

‡ All shells in R.A. charge will be kept filled as far as store accommodation will admit.

§ For Malta, a special proportion of 200 rounds shrapnel per gun is allowed.

‖ Oil and wick for these are supplied by army service corps, as required.

(EQ. R.)

57 Gibraltar 574

57 Gibraltar 0574

Digitized by Google

TABLE 21—*continued.*

	Proportions (per piece).																		
	Movable										Mobile.								Remarks.
	B.L. Guns.		R.B.L. Guns.		R.M.L.						R.B.L. Guns.		R.M.L. Guns.						
					Guns.		Howitzers.												
							8-inch.									7-pr.*			
	5-inch.	4-inch.	40-pr.	20-pr.	40-pr.	25-pr.	76-cwt.	46-cwt.	6·6-inch.	6·3-inch.	12-pr.	9-pr.	16-pr.	13-pr.	9-pr.	200-lb.	150-lb.	2·5-inch.*	
Woolwich Store Charge, No. 27.																			
Caps, joint, chase, R.M.L., 2·5 inch	...	...	...	...	...	...	...	...	...	...	...	...	...	...	...	...	...	1	
Covers, R.M.L., trunnion sight, 2·5 inch	...	...	...	...	...	...	...	...	...	...	...	...	...	...	...	...	...	1	
Pockets drag, washer, R.M.L., 2·5 inch	...	...	...	...	...	...	...	...	...	...	...	...	...	...	...	2	2	3	
Pockets foresight, R.M.L., 2·5 inch	...	...	...	...	...	...	...	...	...	...	...	...	...	...	...	...	...	2	
Pockets range table, R.M.L., 2·5 inch	...	...	...	...	...	...	...	...	...	...	...	...	...	...	...	2	2	2	
Pockets tangent sight, R.M.L., 2·5 inch	...	...	...	...	...	...	...	...	...	...	...	...	...	...	...	...	...	2	

Digitized by Google

	Woolwich Store Charge, No. 28.																			
	Flags, signal, Army — blue, 3 feet square	...	...	...	...	...	...	...	...	...	...	...	...	...	...	...	...	...	...	2 per group of guns.
	Flags, signal, Army — white with stripe, 3 feet square	...	...	...	...	...	...	...	...	...	...	...	...	...	...	...	...	...	...	
	Flags, signal, Army — Poles, 5 feet 6 inches	...	...	...	...	...	...	...	...	...	...	...	...	...	...	...	...	...	...	4 per group of guns.
	Lamps, bull's-eye signal, with stand†	*a*	*a*	*a*	*a*	*a*	*a*	*a*	*a*	*a*	*a*	*a*	*a*	*a*	*a*	*a*	*a*	*a*	*a*	For signalling and general purposes.
	Stands, telescope, signalling ...	...	...	...	...	...	...	...	...	...	...	...	...	...	...	...	...	...	...	1 per group of guns.
	Telescopes, signalling ...	...	...	...	...	...	...	...	...	...	...	...	...	...	...	...	...	...	...	
57 Cork 4063	*Woolwich Store Charge, No. 29.*																			
	Clinometers, Watkin ‡... ...	1	1	...	...	1	1	1	1	1	1	...	...	1	1	1	1	1	1	For giving quadrant elevation and measuring vertical angles.
	Range-finders, field, Watkin, large, with appurtenances	...	..	...	...	...	...	...	...	...	...	...	...	...	...	...	...	...	...	1 per group of guns.
	Stands, telescope, 2½-in. socket	...	...	...	...	...	...	...	...	...	...	...	...	...	...	...	...	...	...	
	Tape, measuring, 50 feet ...	...	...	...	...	...	...	...	...	...	...	...	...	...	...	...	...	...	...	
57	**Telemeters,** artillery	...	...	...	...	...	...	...	...	...	...	...	...	...	...	...	1	1	1	Per 3 guns.
Gibraltar 5740	**Telescopes,** 3-feet	...	...	...	...	...	...	...	...	...	...	...	...	...	...	...	...	...	...	1 per group of guns.

a 1 per 2 pieces or less number.

* *See* footnote * on page 407.

† Oil and wick for these supplied by Army Service Corps, as required.

57 Gibraltar 5740 ‡ As these become unserviceable they will be replaced by the "Clinometer large," for the B.L. 5-inch and 4-inch, and R.M.L. 40-pr. and 25-pr. guns and R.M.L. howitzers; and for the lighter natures of R.M.L. guns by the "Clinometer, field." When the large clinometer is issued to the 40-pr. and 25-pr. R.M.L. it will be carried as convenient.

Digitized by Google

EQUIPMENT OF SIEGE TRAIN COMPANIES, 40-PR. AND 25-PR. R.M.L. GUNS, 8-INCH AND 6·6-INCH R.M.L. HOWITZERS.

TABLE 22.

	Gun.		Howitzer.		Carts, trench.	Wagons.				No. per Battery.
							Platform.			
	40-pr. R.M.L.	25-pr. R.M.L.	8-inch, 70 cwt.	6·6-inch.		Ammunition and store.	Gun.	Gyns.	Store, R.A., and limber.	
Woolwich Store Charge, No. 2.										
Axes felling, curved helve	1	1	1	1	...	1	...	...	1	7
Axes helves, 36 inches (spare)	...	...	...	...	...	...	...	...	...	2
Axes pick heads, 6½ lbs.	1	1	1	1	...	1	...	...	1	7
Axes pick helves, 34½ inches	...	...	...	...	...	...	...	...	...	14*
Barrows, hand, single	...	...	...	...	...	...	...	...	...	2
Bars, crow, 5 feet 6 inches	...	...	...	...	...	...	...	...	...	1
Boxes, folding lantern	...	...	...	...	...	...	...	...	1	1†
Buckets, water, G.S., leather	2	2	2	2	...	2	2	2	2	18
Colours, camp	3	3	3	3	...	...	...	...	...	12
Hooks, bill	1	1	1	1	...	1	...	...	1	7
Horns, powder	...	...	...	...	...	...	...	...	...	1
Kettles, camp, oval, 12 quarts	2	2	2	2	...	2	2	2	2	18
Lamps, tracing§	...	...	...	...	...	...	...	...	...	4
Lanterns, tent-folding‡	...	...	...	...	...	...	...	...	2	2
Mauls, iron hooped	1	1	1	1	...	1	...	...	1	7
Posts, picket, 5-feet	...	...	...	...	...	...	...	...	...	10
Rammers, earth	...	...	...	...	...	...	...	...	...	10
Shovels, universal	1	1	1	1	...	1	...	...	1	7
Spades, N.P.	1	1	1	1	...	1	...	...	1	7
Stools, camp	...	...	...	...	...	...	...	...	1	1
Woolwich Store Charge, No. 4.										
Carts, trench	...	...	...	...	2	...	...	...	...	2
Woolwich Store Charge, No. 5.										
Brushes, water, carriage	2	2	2	2	...	1	1	1	1	1
Couples, trace	2	2	2	2	...	2	...	...	2	12
Woolwich Store Charge, No. 7.										
Chests, tool-filled No. 3E	...	...	...	...	...	...	...	...	...	1
Chests, tool-filled ,, 11B	...	...	...	...	...	...	...	...	...	1
Cases, saw, hand	1	1	1	1	...	...	...	...	...	4
Drivers, screw, G.S., ½-inch	1	1	1	1	...	...	...	...	...	4
Files, second cut, half round, 8-inch	1	1	1	1	...	...	...	...	...	4
Hammers, claw, 28-oz.	1	1	1	1	...	...	...	...	...	4
Handles, file, middling	1	1	1	1	...	...	...	...	...	4

Equipt. 1573

* Also for mauls. † Issued with the wagon.
§ Oil and wick for these are supplied by Army Service Corps, as required.
‡ Candles for these are supplied by Army Service Corps, as required.

57 Gibraltar 5740

Digitized by Google

Equipment of Siege Train Companies, 40-pr. and 25-pr. R.M.L. Guns, 8-inch and 6·6-inch R.M.L. Howitzers—*continued.*

TABLE 22—*continued.*

	Gun.		Howitzer.		Carts, trench.	Wagons.				No. per Battery.
	40-pr. R.M.L.	25-pr. R.M.L.	8-inch, 70 cwt.	6·6-inch.		Ammunition and store.	Platform. Gun.	Platform. Gyns.	Store, R.A., and limber.	
Woolwich Store Charge, No. 8.										
Knives, clasp	1	1	1	1	...	...	...	...	...	4
Levels, F.S., 4 feet	...	...	...	...	...	...	...	...	...	2
Lines, carpenters	1	1	1	1	...	...	...	...	...	4
Pincers, carpenters ... ... pairs	1	1	1	1	...	...	..	...	...	4
Plummets, howitzer*	1	1	1	1	...	...	...	...	...	4
Reels, carpenters line	1	1	1	1	...	...	...	...	...	4
Saws { cross cut { blades, 6 feet 6 inches	...	...	...	...	...	...	...	...	1	1
Saws { cross cut { handles	...	...	...	...	...	...	...	...	2	2
Saws { hand, 26-inch	1	1	1	1	...	...	...	...	...	4
Saws { pit { blades, 6 feet	...	...	...	...	...	...	...	...	1	1
Saws { pit { boxes	...	...	...	...	...	...	...	...	1	1
Saws { pit { tillers	...	...	...	...	...	...	...	...	1	1
Saws { pit { handles	...	...	...	...	...	...	...	...	1	1
Scissors, laboratory	1	1	1	1	...	...	...	...	...	4
Spanners, McMahon, 15-inch	1	1	1	1	...	...	...	...	...	4
Spikes, marline, iron, 11-inch	...	...	...	...	...	...	...	...	...	1
Woolwich Store Charge, No. 10.										
Jacks, lifting { G.S.	...	1	...	...	...	...	...	...	...	1
Jacks, lifting { screw, Clerk's ...	1	...	1	1	...	...	...	...	...	3
Plates, wheel, platform, siege... sets	...	...	1	1	...	...	...	...	...	2
Tarpaulins, 20 ft. × 10 ft.	...	...	...	...	...	...	...	...	...	2
Woolwich Store Charge, No. 11.										
Baskets, tin oil bottle, 5 gallons ...	...	...	...	...	...	...	...	...	...	2
Bottles, tin oil, 4 gallons	...	...	...	...	...	...	...	...	...	2
Bungs, tin, oil bottle, 5 gallons ...	...	...	...	...	...	...	...	...	...	4
Chalk, white ... ... ozs.	4	4	4	4	...	...	...	...	...	16
Drums, oil, 3 gallons	...	...	...	...	...	...	...	...	...	2
Oil, mineral ... ... gals.	...	...	*a*	*a*	...	...	...	...	...	
Wax, bees ... ... ozs.	4	4	4	4	...	...	...	...	...	16
Woolwich Store Charge, No. 13.										
Arc, elevating, carriage, field, R.M.L., 25-pr.	...	1	...	...	...	...	...	...	...	1
Boxes { grease, 14 lbs.	...	...	...	...	...	...	...	...	...	1
Boxes { stationery, store, wagon, R.A.	...	...	...	...	...	...	...	...	1	1
Clippers, portfire	1	1	1	1	...	...	...	...	...	4
Handspikes, traversing, field, R.M.L., 25-pr.	...	2	...	...	...	...	...	...	...	2
Limbers, wagon, store, R.A.	...	...	...	...	...	...	...	...	1	1

57
Chatham
3551

57
3
7176

a As required for buffers.

* When the existing stock of these is used up, "plummets, laying," will be issued.

Digitized by Google

Equipment of Siege Train Companies, 40-pr. and 25-pr. R.M.L. Guns, 8-inch and 6·6-inch R.M.L. Howitzers—*continued.*

TABLE 22—*continued.*

	Gun.		Howitzer.			Wagons.				
	40-pr. R.M.L.	25-pr. R.M.L.	8-inch, 70 cwt.	6·6-inch.	Carts, trench.	Ammunition and store.	Platform. Gun.	Platform. Gyns.	Store, R.A., and limber.	No. per Battery.
Woolwich Store Charge, No. 13—continued.										
Pins { keep, box, lock	2	2	1	1	...	...	...	...	...	6
Pins { linch, 2nd class, steel	1	2	1	1	1	1	1	1	1	10*
Sticks, portfire	1	1	1	1	...	...	...	...	...	4
Straps, securing, 1 in. × 44 in. ...	...	...	...	...	...	...	...	...	...	18
Swingletrees, No. 2	...	1	...	...	...	1	...	...	1	4
Wagons { ammunition and store, R.A.	...	...	...	...	...	2	...	...	...	2
Wagons { store, R.A.	...	...	...	...	...	...	...	...	1	1
Washers { drag, 2nd class	...	1	...	...	1	1	1	1	1	7*
Washers { loop ,, ...	1	...	1	1	...	...	...	...	...	3
Woolwich Store Charge, No. 14.										
Arcs, elevating, carriage, siege, R.M.L. { 8-inch, 70 cwt., howitzer top	...	...	1	...	...	...	...	...	...	1
Arcs, elevating, carriage, siege, R.M.L. { 40-pr. ... ... top { 40 pr. ...	1	...	...	1	...	...	...	...	...	2
Arcs, elevating, carriage, siege, R.M.L. { 40-pr. ... ... top { 25-pr. ...	1	...	...	...	...	...	...	...	...	1
	...	1	...	...	...	...	...	...	...	1
Bolts, ⅝-inch	8	5	...	...	...	...	...	...	...	13
Cans, lubricating, No. 5	1	1	1	1	...	...	...	...	...	4
Carriages, siege, R.M.L. { 8-inch, 70 cwt., howitzer, central pivot	...	...	1	...	...	...	...	...	...	1
Carriages, siege, R.M.L. { 6·6-inch howitzer, central pivot	...	...	...	1	...	...	...	...	...	1
Carriages, siege, R.M.L. { 40-pr. top, overbank ...	1	...	...	...	...	...	...	...	...	1
Carriages, siege, R.M.L. { Spanners { lock nut ...	1	1	...	...	...	...	...	...	...	2
Carriages, siege, R.M.L. { Spanners { small ...	1	1	...	...	...	...	...	...	...	2
Carriages, siege, R.M.L. { 25-pr. top, overbank ...	...	1	...	...	...	...	...	...	...	1
Cartouches, R.M.L. { 40-pr.	2	...	...	...	...	...	...	...	...	2
Cartouches, R.M.L. { 25-pr.	...	2	...	...	...	...	...	...	...	2
Cocks, hydraulic buffer, siege, R.M.L. howitzer.	...	...	...	...	...	...	...	...	...	1
57 D'port. 5199 **Drivers**, screw, No. 1	...	...	2	2	...	...	...	...	...	...†
Gyns, triangle, with appurtenances, light, tubular	...	...	...	...	...	...	...	1	...	1
Handspikes, common { 7 ft.	...	...	8	...	...	...	...	...	...	8
Handspikes, common { 6 ft.	8	8	...	8	...	...	...	...	...	24
Leathers, gland, hydraulic buffer ...	...	...	1	1	...	...	...	...	...	2*
Levers, 12-ft.	...	...	1	...	...	..	...	...	...	2
Limbers { field, R.M.L. 25-pr. ...	...	1	...	...	...	...	...	...	...	1
Limbers { siege, R.M.L. { 40-pr.	1	...	...	...	...	...	...	...	...	1
Limbers { siege, R.M.L. { howitzer, siege train.	...	...	1	1	...	...	...	...	...	2
Loops, breech, top carriage, R.M.L. { 40-pr.	1	...	...	...	...	...	...	...	...	1
Loops, breech, top carriage, R.M.L. { 25-pr.	...	1	...	...	...	...	...	...	...	1
Measures, hydraulic buffer, filling ...	...	...	1	1	...	...	...	...	...	2

* Spare.

† For use when laying d d platforms.

Digitized by Google

Equipment of Siege Train Companies, 40-pr. and 25-pr. R.M.L. Guns, 8-inch and 6·6-inch R.M.L. Howitzers—*continued.*

TABLE 22—*continued.*

	Gun.		Howitzer.		Carts, trench.	Wagons.				No. per Battery.
	40-pr. R.M.L.	25-pr. R.M.L.	8-inch, 70 cwt.	6·6-inch.		Ammunition and store.	Platform. Gun.	Platform. Gyns.	Store, R.A., and limber.	
Woolwich Store Charge, No. 14—continued.										
Pins, linch, 1st class, steel	1	...	1	1	...	...	...	...	...	3*
Planks, trail, siege	...	...	1	1	...	...	...	...	...	2
Plates, pivot, double-decked platform	...	...	1	1	...	...	...	...	...	2
Platforms, Clerk's	1	1	...	...	...	...	...	...	...	2
siege double-decked "C" pivot†	...	...	1	1	...	...	...	...	...	2
Plugs, pivot, No. 17	...	...	1	1	...	...	...	...	...	2
Plugs, filling hole, hydraulic buffer	...	...	1	1	...	...	...	...	...	2*
Rollers, shifting No. 3	...	...	1	...	...	...	...	...	...	1
,, 4	...	...	...	1	...	...	...	...	...	1
,, 5	1	...	...	...	...	...	...	...	...	1
,, 6	...	1	...	...	...	...	...	...	...	1
Spanners, hydraulic buffer	...	...	...	...	...	...	...	...	...	...‡
Straps, lifting R.B.L., 40-pr.	12	...	...	...	...	...	...	...	...	12
projectiles R.M.L., 25-pr.	...	18	...	...	...	...	...	...	...	18
Swingletrees, No. 1	3	...	3	3	...	...	3	3	...	15
Wagons, platform gun, R. M. L., 6·6-in.	...	...	...	...	...	...	1	...	...	1
gyns	...	...	...	...	...	...	...	1	...	1
Washers, drag, 1st class	1	...	1	1	...	...	...	...	...	3*
Wrenches ... knock-up, carriages, siege, top pivot, No. 4	1	1	...	...	...	...	...	...	...	2
	1	1	1	1	...	...	...	...	...	4
Woolwich Store Charge, No. 15.										
Boxes, grease, 3 lbs.	1	1	1	1	1	2	1	1	1	10
Woolwich Store Charge, No. 16.										
Spikes, gun common	2	2	2	2	...	...	...	...	...	8
spring C	...	...	...	1	...	...	...	...	...	1
spring D	1	1	...	1	...	...	...	...	...	3
Vent servers, with lanyard	2	2	2	2	...	...	...	...	...	8
Woolwich Store Charge, No. 17.										
Bits, vent, 17-inch	1	1	1	1	...	...	...	...	...	4
Ordnance, R.M.L. 8-inch howitzer, 70 cwt.	...	...	1	...	...	...	...	...	...	1
6·6-inch howitzer	...	...	...	1	...	...	...	...	...	1
40-pr.	1	...	...	...	...	...	...	...	...	1
25-pr.	...	1	...	...	...	...	...	...	...	1

* Spare.

† To be kept in Ordnance Store, or Royal Artillery charge for Army Ordnance Department, as best suits the requirements of each locality. To be demanded and laid for service by Royal Engineers, but for instructional purposes of Royal Artillery may be drawn and laid by them.

‡ *See* Appendix XI, page 278.

D'port. 2024

Digitized by Google

Equipment of Siege Train Companies, 40-pr. and 25-pr. R.M.L. Guns, 8-inch and 6·6-inch R.M.L. Howitzers—*continued.*

TABLE 22—*continued.*

	Gun.		Howitzer.			Wagons.				
	40-pr. R.M.L.	25-pr. R.M.L.	8-inch, 70 cwt.	6·6-inch.	Carts, trench.	Ammunition and store.	Platform. Gun.	Platform. Gyns.	Store, R.A., and limber.	No. per Battery.
Woolwich Store Charge, No. 17—continued.										
Pivots, elevating { B	1	...	1	1	...	...	...	...	...	3
C	...	1	...	...	...	...	...	...	...	1
Prickers, vent { 17-in.	...	...	2	...	...	...	...	...	...	2
12 ,,	2	2	...	2	...	...	...	...	...	6
Sights, R.M.L. { crossbar { fore	1	1	2	2	...	...	...	...	...	...
crossbar { tangent	1	1	2	2	...	...	...	...	...	...
fore B	1	1	...	...	...	...	...	...	...	...
tangent	1	1	...	...	...	...	...	...	...	...
Woolwich Store Charge, No. 18.										
Bags, extractor, projectile, 9-inch	...	...	1	1	...	...	...	...	...	2
Brushes, piasaba, R.M.L. { 8-inch, 70 cwt., howitzer	...	...	1	...	...	...	...	...	...	1
6·6-inch	...	...	...	1	...	...	...	...	...	1
40-pr.	1	...	...	...	...	...	...	...	...	1
25-pr.	...	1	...	...	...	...	...	...	...	1
Caps, sponge* { No. 5	...	1	...	...	...	...	...	...	...	1
,, 7	1	...	...	...	...	...	...	...	...	1
,, 9	...	...	...	1	...	...	...	...	...	1
,, 10	...	...	1	...	...	...	...	...	...	1
Cases { packing { for top carriage	1	1	...	...	...	...	...	...	...	2
packing { small, containing parts for siege carriage only.	1	1	...	...	...	...	...	...	...	2
cartridge { No. 2	...	...	2	...	...	...	...	...	...	2
,, 4	2	2	...	2	...	...	...	...	...	6
Cordage { hawser, 3-strand, tarred { 2½-inch fm.	...	...	...	...	...	...	...	...	...	56
hawser, 3-strand, tarred { 1½-inch fm.	...	...	...	...	...	...	...	...	...	56
spunyarn, hemp ... lbs.	2	2	2	2	...	...	...	...	...	8
Extractors, projectile, R.M.L. { 8-inch gun	...	...	1	...	...	...	...	...	...	1
6·6-inch howitzer	...	...	...	1	...	...	...	...	...	1
Lashings, tarred, 1-inch { 24 feet	...	...	...	...	...	...	...	1	...	1
20 ,,	...	...	...	...	...	2	3	8	...	13
16 ,,	...	...	...	...	...	...	...	1	...	1
10 ,,	...	...	...	...	...	1	...	10	...	11
Lines, Hambro'	...	...	1	1	...	...	...	...	...	2
Marline ... lbs.	...	...	3	3	...	...	...	...	...	6
Rammers, R.M.L. { 8-inch howitzer, 70 cwt.	...	...	2	...	...	...	...	...	...	2
6·6-inch howitzer	...	...	...	2	...	...	...	...	...	2
40-pr.	1	...	...	...	...	...	...	...	...	1
25-pr.	...	1	...	...	...	...	...	...	...	1
jointed { 40-pr.	1	...	...	...	...	...	...	...	...	1
jointed { 25-pr.	...	1	...	...	...	...	...	...	...	1
Ropes { cotton, white, 2-inch ... fm.	...	...	4	4	...	...	...	...	...	8
drag, heavy ... ... pairs	1	1	1	1	...	1	1	1	1	8
parbuckling, 18 fms., 4-in.	...	...	...	...	...	...	...	2	...	2

* Only to be used for sponges in transit or where stores are damp, or when kept in the open.

Digitized by Google

Equipment of Siege Train Companies, 40-pr. and 25-pr. R.M.L. Guns, 8-inch and 6·6-inch R.M.L. Howitzers—*continued.*

TABLE 22—*continued.*

	Gun.		Howitzer.			Wagons.				
	40-pr. R.M.L.	25-pr. R.M.L.	8-inch, 70 cwt.	6·6-inch.	Carts, trench.	Ammunition and store.	Platform. Gun.	Platform. Gyns.	Store, R.A., and limber.	No. per Battery.
Woolwich Store Charge, No. 18—continued.										
Selvagees, ordinary	2	2	2	2	...	...	...	...	...	8
Sponges, R.M.L. 8-inch, 70 cwt., howitzer	...	...	2	...	...	...	...	...	...	2
Sponges, R.M.L. 6·6 inch howitzer ...	...	...	...	2	...	...	...	...	...	2
Sponges, R.M.L. 40-pr. wire rope stave	1	...	...	...	...	...	...	...	...	1
Sponges, R.M.L. 40-pr. wood stave...	1	...	...	...	...	...	...	...	...	1
Sponges, R.M.L. 25-pr. wire rope stave	...	1	...	...	...	...	...	...	...	1
Sponges, R.M.L. 25-pr. wood stave...	...	1	...	...	...	...	...	...	...	1
Tampeons, R.M.L. 8-in., 70-cwt. howitzer	...	...	1	...	...	...	...	...	...	1
Tampeons, R.M.L. 6·6-in.	...	...	...	1	...	...	...	...	...	1
Tampeons, R.M.L. 40-pr.	1	...	...	...	...	...	...	...	...	1
Tampeons, R.M.L. 25 ,, ...	...	1	...	...	...	...	...	...	...	1
Twine, whipping ... ... lbs.	1	1	1	1	...	...	...	...	...	4
Wadhooks, R.M.L. 8-in., 70-cwt. howitzer	...	...	1	...	...	...	...	...	...	1
Wadhooks, R.M.L. ,, 46 ,, ,,	...	...	...	1	...	...	...	...	...	1
Wadhooks, R.M.L. 40-pr.	1	...	...	...	...	...	...	...	...	1
Worms, wadhook, No. 9	...	1	...	...	...	...	...	...	...	1
Woolwich Store Charge, No. 19.										
Blocks, brake, R.M.L., 8-inch, 70 cwt. howitzer (spare.)	...	...	2	...	...	...	...	...	...	2
Planks, half... 6 ft. × 12 in. ...	...	...	...	...	...	...	...	...	...	6
Planks, half... 4 ,, × 12 ,, ...	...	...	...	...	...	...	...	...	...	3
Planks, moving guns whole, 10 ,, × 17 ,, fir	...	...	...	...	...	...	...	...	...	10
Planks, moving guns whole, 10 ,, × 17 ,, oak	...	...	...	...	...	...	...	...	...	3
Rollers, ground 3 ft. × 6 in. diameter ...	...	...	...	...	...	...	...	...	...	4
Rollers, ground 2½ ,, × 5 ,, ,, ...	...	...	...	...	...	...	3	3	...	6
Rollers, ground 20 in. × 5 in. ,, ...	...	...	...	...	...	...	1	1	...	2
Scotches large	...	...	...	...	...	...	...	...	...	10
Scotches medium	...	...	...	...	...	...	...	...	...	10
Scotches small	...	...	...	...	...	...	...	...	...	10
Skids 3 ft. × 9 in. × 6 ,, ...	...	...	...	...	...	...	...	...	...	5
Skids 3 ,, × 6 ,, × 5 in.	...	...	...	...	...	...	...	...	...	5
Skids 3 ,, × 6 ,, × 3 ,, ...	...	...	...	...	...	...	...	...	...	5
Skids 3 ,, × 4 ,, × 5 ,, ...	...	...	...	...	...	...	...	...	...	5
Skids dismounting 14 ft. × 8 in. square prs.	...	...	...	...	...	...	...	...	...	1
Skids dismounting 14 ft. × 5½ in. square prs.	...	...	...	...	...	...	...	...	...	1
Woolwich Store Charge, No. 20.										
Bags, burster. R.M.L., guns ... common howitzers	1 per empty common shell.									74 / 2
Cartridges, drill, R.M.L. 8-in., 11½-lb.	...	...	1	...	...	...	...	...	...	1
Cartridges, drill, R.M.L. 6·6-in., 5 ,, ...	...	...	...	1	...	...	...	...	...	1
Cartridges, drill, R.M.L. 40-pr., 6¾ ,, ...	1	...	...	...	...	...	...	...	...	1
Cartridges, drill, R.M.L. 25 ,, 4½ ,, ...	...	1	...	...	...	...	...	...	...	1
Cases, powder, metal-lined whole	6	5	9	4	...	...	...	...	...	24
Cases, powder, metal-lined quarter	...	...	...	...	...	...	...	...	...	1
Cases, powder, metal-lined Keys	1		1	1	..	...	...	...	...	4

Digitized by Google

Equipment of Siege Train Companies, 40-pr. and 25-pr. R.M.L. Guns, 8-inch and 6·6-inch R.M.L. Howitzers—*continued.*

TABLE 22—*continued.*

	Gun.		Howitzer.		Carts, trench.	Wagons.				No. per Battery.
	40-pr. R.M.L.	25-pr. R.M.L.	8-inch, 70 cwt.	6·6-inch.		Ammunition and store.	Platform. Gun.	Platform. Gyns.	Store, R.A., and limber.	
Woolwich Store Charge, No. 21.										
Bags, primer, filled, 7 drams	3 per empty common shell.									
Cartridges, R.M.L., filled, silk cloth — 8-in. 11½ lbs. R.L.G.[2]	...	...	40	...	...	...	...	...	...	40
8-in. 7 ,, ,,	...	...	30	...	...	...	...	...	...	30
8-in. 3½ ,, ,,	...	...	30	...	...	...	...	...	...	30
6·6-in. 5 ,, ,,	...	...	...	40	...	...	...	...	...	40
6·6-in. 3 ,, ,,	...	...	...	35	...	...	...	...	...	35
6·6-in. 2 ,, ,,	...	...	...	25	...	...	...	...	...	25
40-pr., 6¾ lbs. R.L.G.[4] ...	100	...	...	...	...	...	...	...	...	100
25 ,, 4½ ,, ,, ,, ...	...	100	...	...	...	...	...	...	...	100
Gunpowder, shell, F.G.... ... lbs.	...	...	...	...	...	...	...	...	...	20
Woolwich Store Charge, No. 22.										
Fuzes* percussion, direct action, No. 3 ...	...	...	78	78	...	...	...	...	...	156
percussion, direct action, delay, No. 10.	...	...	39	39	...	...	...	...	...	78
time, R.L., No. 7	60	60	...	...	...	...	...	...	...	120
time, sensitive, long, No. 23	...	...	10	10	...	...	...	...	...	20
time, sensitive, middle, No. 24 ...	36†	36‡	10	10	...	...	...	...	...	92
time, 15 seconds, M.L. special priming, No. 42.	...	...	2	2	...	...	...	...	...	4
Handles, light, G.S.	1	1	1	1	...	...	...	...	...	4
Implements, fuze and shell — Bits, hook borer ...	6	6	6	6	...	...	...	...	...	24
Cylinders, common ...	1	1	1	1	...	...	...	...	...	4
Drivers, screw, Shrapnel, large.	1	1	1	1	...	...	...	...	...	4
Extractors, fuze, small, rifled.	1	1	1	1	...	...	...	...	...	4
Handles, hook borer ...	1	1	1	1	...	...	...	...	...	4
Hooks, hook borer ...	1	1	1	1	...	...	...	...	...	4
Keys, fuze, universal...	1	1	2	2	...	...	...	...	...	6
Pincers, Shrapnel, primer	1	1	1	1	...	...	...	...	...	4
Lanyards, friction tube siege, No. 1...	3	3	3	3	...	...	...	...	...	12
Lights, long, G.S....	8	8	8	8	...	...	...	...	...	32
Match, slow... ... ... lbs.	...	...	...	...	...	...	...	...	...	2
Pockets — fuze and hook borer ...	1	1	1	1	...	...	...	...	...	4
tube land service	1	1	1	1	...	...	...	...	...	4
Portfires, common	2	2	2	2	...	...	...	...	...	8
Primers, light, G.S.	8	8	8	8	...	...	...	...	...	32
Straps, tube box, long	2	2	2	2	...	...	...	...	...	8
Tubes, friction — copper, solid drawn, with ball	125	125	125	125	...	...	...	...	...	500
drill	1	1	1	1	...	...	...	...	...	4

* Sections, dummy, of each of the above-named fuzes to be issued.
† Any 15 seconds with detonators on charge will first be used up.
‡ Any 15 seconds M.L. on charge will first be used up.

Digitized by Google

Equipment of Siege Train Companies, 40-pr. and 25-pr. R.M.L. Guns, 8-inch and 6·6-inch R.M.L. Howitzers—*continued.*

TABLE 22—*continued.*

	Gun.		Howitzer.			Wagons.				
							Platform.			
	40-pr. R.M.L.	25-pr. R.M.L.	8-inch, 70-cwt.	6·6-inch.	Carts, trench.	Ammunition and store.	Gun.	Gyns.	Store, R.A., and limber.	No. per Battery.
Woolwich Store Charge, No. 24.										
Bearers, 8-inch howitzer	...	...	1	...	...	...	...	...	...	1
shot R.M.L. 6·6-inch „	...	...	...	1	...	...	...	...	...	1
Boxes, stars, incendiary	...	...	7	2	...	...	...	...	...	9
Gas-checks, 8-in. howitzer, 70-cwt.	...	...	99	...	...	...	...	...	...	99
R.M.L. 6·6-in. „	...	...	...	99	...	...	...	...	...	99
40-pr.	97	...	...	...	...	...	...	...	...	97
Implements, fuze and shell, spanners, gas check plug, 40-pr.	1	...	...	...	...	...	...	...	...	1
Plugs, drill G.S.	2	2	...	...	...	...	...	...	...	4
fuze hole G.S.	96	96	100	100	...	...	...	...	...	392
Shells, R.M.L., filled common 8-in., 70-cwt. howitzer, studless.	...	...	78	...	...	...	...	...	...	78
common 6·6-in. howitzer	...	...	...	78	...	...	...	...	...	78
common 40-pr.	60	...	...	...	...	...	...	...	...	60
common 25 „	...	60	...	...	...	...	...	...	...	60
Shrapnel 8-in. howitzer ...	...	...	20	...	...	...	...	...	...	20
Shrapnel 6·6-in. howitzer	...	...	...	20	...	...	...	...	...	20
Shrapnel 40-pr.	36	...	...	...	...	...	...	...	...	36
Shrapnel 25 „	...	36	...	...	...	...	...	...	...	36
star 8-in.	...	...	2	...	...	...	...	...	...	2
star 6·6-in.	...	...	...	2	...	...	...	...	...	2
Shot, 40-pr.	4	...	...	...	...	...	...	...	...	4
R.M.L., case 25-pr.	...	4	...	...	...	...	...	...	...	4
Stars, incendiary	...	...	700	200	...	...	...	...	...	900
Woolwich Store Charge, No. 25.										
Boxes, lantern, bull's-eye	1	1	1	1	...	...	...	...	...	4
Brooms, bass heads, common ...	1	1	1	1	...	...	...	...	...	4
bass handles	1	1	1	1	...	...	...	...	...	4
Cans, oil, feeding, 1 pint	...	...	1	1	...	...	...	...	...	2
Irons, branding, letters, 2 letter (R.A.)	...	...	...	...	...	...	...	...	...	1
Lanterns, bull's-eye*	2	2	2	2	...	...	...	...	...	8
Scissors, lamp ... ... pairs	...	...	...	...	...	...	...	...	...	2
Woolwich Store Charge, No. 28.										
Binoculars	...	...	...	...	...	...	...	...	...	1
„ cases	...	...	...	...	...	...	...	...	...	1
Books, signalling, message forms ...	...	...	...	...	...	...	...	...	...	5
Cases binoculars	...	...	...	...	...	...	...	...	...	1
Cases message book	...	...	...	...	...	...	...	...	...	2
Flags, signal, Army blue, 3 feet square	...	...	...	...	...	...	...	...	...	6
Army white, with stripe, 3 feet square	...	...	...	...	...	...	...	...	...	6
Army poles, 5 feet 6 inches ...	...	...	...	...	...	...	...	...	...	12
Telescopes, signalling	...	...	...	...	...	...	...	...	...	2

57—Gib. 5740

* Oil and wick for these will be supplied by Army Service Corps, as required.

57—Gib. 5740

Digitized by Google

Equipment of Siege Train Companies, 40-pr. and 25-pr. R.M.L. Gun, 8-inch and 6·6-inch R.M.L. Howitzers—*continued.*

TABLE 22—*continued.*

	Gun.		Howitzer.			Wagons.				No. per Battery.
	40-pr. R.M.L.	25-pr. R.M.L.	8-inch, 70 cwt.	6·6-inch.	Carts, trench.	Ammunition and store.	Platform. Gun.	Platform. Gyns.	Store, R.A., and limber.	
Woolwich Store Charge, No. 29.										
Cases, telescope, 3-ft.	...	...	...	...	...	...	...	...	...	1
Chains, measuring 66 feet	...	...	...	...	...	...	...	...	...	1
57—Gib. 5740 **Clinometers,** Watkin*	1	1	1	1	...	...	...	...	...	4
Range-finders, siege†	...	...	...	...	...	...	...	...	...	1
Rods, measuring, common, 6 feet ...	...	...	...	...	...	...	...	...	...	1
Sextants, pocket	...	...	...	...	...	...	...	...	...	1
Tapes, measuring, 50 feet	...	...	...	...	...	...	...	...	...	1
Telescopes, 3-feet...	...	...	...	...	...	...	...	...	...	1

57—Gen-No. 4499 * As these become unserviceable they will be replaced by the "Clinometer large," which will, when issued to 40-pr. and 25-pr. R.M.L., be carried as convenient.

57—Gen-No. 5465 † The "Apparatus, observation of fire" will be issued when the existing stock of these range-finders is used up, or as may be specially authorised.

Tools, Painting Carriages.

Brushes, paint	Ground 000	1	Triennial supply during peace only.	
	Sash tool	No. 2	2	
		,, 4	1	
		,, 6	1	
		,, 8	1	
Brushes, sable, writing, duck, large			2	
Cans, paint ...	$7\frac{1}{2}$ inches diameter		1	
	7 ,, ,, ...		1	

MAGAZINE STORES.

Armaments. Only such stores as are sufficient to maintain one laboratory in each Royal Artillery sub-district will be allowed, except on special authority.

Where a laboratory building does not exist, a tent will be used for making up cartridges and filling shells. In such cases, there being no means of upending heavy R.M.L. shells, an extemporised tripod of 12-feet levers (or other suitable spars) will be used, a leading block for the fall of the tackle being made fast to a holdfast (2 pickets will suffice) inside the base of the tripod. A Gibraltar gyn would, if available, equally answer the purpose.

In laboratories of light structure, where the roof is not strong enough to hold a tackle, the foregoing arrangements will also be adopted, but the feet of the tripod should be secured by cleats nailed to the floor, and an eye-bolt let in as a holdfast for the leading block.

Digitized by Google

Magazine Stores—*continued.*

TABLE 23.	Proportions.	Remarks.	
Woolwich Store Charge, No. 2.			
Tent Mallets	2 per shell filling room	For rifled ordnance above 20-pr.	38407 Equipt. 1472
Woolwich Store Charge, No. 5.			
Brushes, water, carriage ...	2 per shell filling room	For cleaning shells, &c.	
Woolwich Store Charge, No. 7.			
Adzes, coopers, magazine ...	2 per cartridge filling room and 1 per shell filling room.	For opening and heading powder barrels.	
Drivers, coopers, socket, metal	1 per cartridge filling room, and 1 per shell filling room.	Used with the adze.	
Woolwich Store Charge, No. 8.			
Needles, magazine, nickel silver { 4-inch ... / $1\frac{3}{4}$ " ... }	As required ...	For sewing up cartridges filled with grain powder.	
Prickers, cartridge	As required	For use with the $1\frac{3}{4}$-inch needle when choking cartridges filled with prism powder.	
Scissors, magazine ... pairs	2 per cartridge or shell filling room.	Cutting off choke of filled cartridges and burster bags.	38407 Equipt. 1472
Woolwich Store Charge, No. 10.			
Magazines, portable, with trucks	According to circumstances.	Where there are no expense magazines; but metal-lined cases serve the same purpose.	
Woolwich Store Charge, No. 11.			
Methylated Spirits ... pints	As required	For shellac cement.	
Woolwich Store Charge, No. 14.			
Barrows, projectile — No. 5	1 per gun, 10-inch B.L., and 10·4-inch R.M.L.	For service between the laboratory, shell store and shell lift.	57 Hong Kong 8523 38407 Equip. 1631
Barrows, projectile — No. 10	1 per gun, B.L. 12-inch, and R.M.L. 12·5-inch and 12-inch 35 tons.	For service between the laboratory, shell store and shell lift.	
	1 per shell filling room, B.L. 12-inch, and R.M.L. 12·5-inch, and 12-inch 35-ton guns.	For service in the laboratory.	
Barrows, projectile — No. 11	1 per gun, B.L. 8-inch and 9·2-inch, and R.M.L. 7-inch up to 12-inch 25 tons; also 8-inch and 6·6-inch howitzers.	For service between the laboratory, shell store and shell lift.	

Digitized by Google

Magazine Stores—*continued.*

TABLE 23—*continued.*	Proportions.	Remarks.
Woolwich Store Charge, No. 14—continued.		
Barrows, projectile, No. 11 ...	1 per shell filling room, for B.L. 8-inch to 10-inch and R.M.L. 7-inch to 12-inch 25-ton guns, also 8-inch and 6·6-inch howitzers and 7-inch R.B.L.	For service in the laboratory.
Trolleys, magazine	1 per 17·72-inch and 10·4-inch R.M.L. guns.	For moving shells.
Woolwich Store Charge, No. 15.		
Barrows { magazine, single ...	1 per main magazine...	For transporting powder within magazine.
Barrows { magazine lamps ...	1 per work ...	For conveying the lamps.
Barrows { ,, ,, Trays	3 per barrow ...	For conveying the lamps.
Woolwich Store Charge, No. 18.		
Blocks, wood, snatch, 8-inch...	1 per shell lift for 7-inch R.B.L. guns.	For changing the lead of the fall.
Pulley blocks, differential ...	3 per 17·72-inch R.M.L. gun.	For shell stores (2 for use, and 1 spare).
Slings, rope, 4-inch, 4 feet long*	1 per shell filling room	B.L. and R.M.L. ordnance, except 17·72-inch.
Tackles, shell room	1 per shell filling room	B.L. and R.M.L. ordnance, except 17·72-inch.
Woolwich Store Charge, No. 20.		
38407 Equipt. 1542 **Apparatus,** filling cartridges...	1 per cartridge filling room per nature of cartridge.	For R.M.L. 17·72-inch, inch, 12·5-inch Mark I, 12·5-inch Mark II, and 10·4-inch; also 12·5-inch with stick, and all B.L. 6-inch and upwards.
Boots, magazine ... ... pairs	2 per magazine... ...	For wear over the ordinary boots or shoes by inspecting officers, &c.
59 22 3,600 **Cages** { cartridge cylinder { Ropes { wire (*a*) ...	1 per cartridge lift for B.L. 12-inch and R.M.L. 12·5-inch guns.	In demands, the total length of wire rope should be stated.
Cages { cartridge cylinder { Ropes { hemp† (*a*)	1 per cartridge lift for B.L. 6-inch to 10-inch and R.M.L. guns from 7-inch to 12-inch 35 tons, and 1 per cartridge or shell lift for 7-inch R.B.L. guns.	To be demanded separately and made up locally according to length required.
Cages { cartridge cylinder { Counterweights		(*a*) To lift cages or cartridge cases.
Cages { cartridge cylinder { Hooks		
Cages { cartridge cylinder { Thimbles		

* As these slings become unserviceable they will be replaced by "Selvagees, projectile," which will be made locally.

† In cartridge or shell lifts, where there are evident signs of damp, the hoisting rope is to be kept in a dry store, and not reeved until required.

Digitized by Google

Magazine Stores—*continued.*

TABLE 23—*continued.*	Proportions.	Remarks.
Woolwich Store Charge, No. 20—continued.		
Cases, powder: cylindrical	In proportion to cartridges to be filled and friction tubes to be maintained.	
Cases, powder: metal lined* (whole / half / quarter)		
Cases, powder: Keys ...	3 per cartridge filling room and 1 per magazine or cartridge store where metal-lined cases are stored.	For opening ammunition barrels and metal-lined cases.
Discs, wood, for building up cartridge	1 per shell filling room	For 17·72-inch R.M.L. guns (To be made locally).
Gauges, cartridge: length, universal ...	1 per cartridge filling room, for B.L., R.B.L. and R.M.L. ordnance.	To gauge the length.
Gauges, cartridge: ring	1 per cartridge filling room, for each nature.	Except for mortars and carronades.
Shoes, magazine ... pairs†	1 per shell or cartridge lift.	For B.L. 12-inch, and R.M.L. 12·5-inch guns, 2 pair per lift.
	2 per shell or cartridge store.	
	6 or less per laboratory or magazine.	Or tent where no laboratory is provided.
Silk, twist ... ... ozs.	As required	For making up cartridges.
Stages, magazine...	1 per cartridge store where required.	
Straps, removing lids of cartridge cylinders ... pairs	1 per cartridge store of each nature.	Opening zinc cylinders of the first patterns only for 7-, 9-, and 10-inch R.M.L. guns.
Tape, white: 2½-inch ... ... yds.	As required	For sealing cartridge cylinders.
Tape, white: 1¼ ,, ... ,, / ½ ,, ... ,,	As required	For sealing tin cylinders.
Tape, white: ¼ ,, ... ,,	As required	For sealing tin cylinders and boxes.
Travellers, overhead‡	3 per 17·72-inch R.M.L. gun.	2 per shell store and spare, for carrying differential pulleys.
Woolwich Store Charge, No. 22.		
Funnels, cartridge	3 per cartridge filling room.	For filling cartridges except those of prism powder.
Implements, fuze and shell, blocks, riveting	1 per shell filling room.	For S.B. ordnance, except mortars.

* Zinc cylinders are employed instead for the filled cartridges of R.M.L. guns, 7-inch and over.
† 24 pairs per work for 17·72-inch guns.
‡ R.E. stores.

Digitized by Google

Magazine Stores—*continued.*

TABLE 23—*continued.*

		Proportions.	Remarks.
	Woolwich Store Charge, No. 22—continued.		
	Drifts: common	1 per shell filling room.	For S.B. ordnance, except mortars.
	Drifts: diaphragm Shrapnel: large	2 per shell filling room.	
	Drifts: diaphragm Shrapnel: small	1 per shell filling room.	
38407 Equipt. 1472	Drifts: G.S.	2 per shell filling room	For rifled ordnance where the bursting charges are not contained in bags.
	Drivers, screw, Shrapnel: large	1 per shell filling room	For all rifled and S.B. ordnance above 18-pr. with Shrapnel shells.
	Drivers, screw, Shrapnel: small	1 per shell filling room	For S.B. ordnance, 18-pr. and under, with Shrapnel shells.
	Extractors, fuze, small: rifled	1 per shell filling room	For rifled ordnance with time fuzes.
	Extractors, fuze, small: S.B.	1 per shell filling room	For S.B. ordnance with time fuzes, except cast-iron mortars.
38407 Equipt. 1472	**Implements,** fuze and shell*: Funnels, shell: copper: large ...	1 per shell filling room, for shells for 16-inch R.M.L. guns and upwards.	
	Funnels, shell: copper: small ...	2 per shell filling room, for shells under 16-inch and which contain their bursting charges in bags.	For use with the brass rods for filling shells.
	Funnels, shell: leather: common, large	2 per shell filling room, for shells which have no bags.	For all ordnance, but only one allowed where there is S.B. only.
	Funnels, shell: leather: diaphragm Shrapnel: large ...	1 per shell filling room	For S.B. ordnance above 18-pr., with Shrapnel shells.
	Funnels, shell: leather: diaphragm Shrapnel: small . .	1 per shell filling room	For S.B. ordnance, 18-pr. and under, with Shrapnel shells.
	Hammers, rivetting...	1 per shell filling room	For S.B. ordnance, except mortars.
	Hooks, G.S., wad ...	2 per shell filling room, for shells with bursting charges not contained in a bag.	For removing wad when examining shells.
38407 Equipt. 1472	Keys, fuze and plug, G.S.†	2 per shell filling rooms	For all ordnance, except cast-iron mortars, but only 1 allowed where there is none but S.B.
		1 per expense shell store.	For all ordnance except mortars; to loosen plugs previous to issue of shell.

* When shell filling rooms are used in common for both rifled and smooth-bore ordnance, a double supply of the implements which are used with both should not, except under very special circumstances, be demanded.

† Will be replaced by the "Key, fuze, universal," as the present store becomes used up.

Digitized by Google

Magazine Stores—*continued.*

TABLE 23—*continued.*				Proportions.	Remarks.	
Woolwich Store Charge, No. 22—continued.						
Implements, fuze and shell*	Mallets	common ...		1 per shell filling room	For S.B. ordnance, except cast-iron mortars.	
		mortar ...		2 per shell filling room	For all rifled ordnance, 20-pr. and under, and S.B. mortars.	38407 Equipt. 1472
	Pincers	fuze, Armstrong		1 per laboratory, at such stations only as are supplied with presses for pressing lead cap on to Armstrong base percussion fuze for 4·7-inch Q.F. gun.	For extracting lead cap of Armstrong base percussion fuze.	
		Shrapnel primer pairs		1 per shell filling room, for rifled Shrapnel shells	For removing primers when examining shells.	
	Prickers, wax			1 per shell filling room.	For S.B. ordnance, except mortars.	
	Punches, riveting ...					
	Rectifiers, rivet hole...					
	Rods, filling shell	large ...		1 per shell filling room, for R.M.L. 16-inch guns and upwards, and B.L. 13·5-inch guns and upwards.		
		small ...		2 per shell filling room, for shells under 16-inch R.M.L. and 13·5-inch B.L., which have their bursting charges contained in bags.	For use with the copper funnels, for filling shells with bags.	38407 Equipt. 1472
	Scrapers, shell	62-inch ...		1 per shell filling room, for R.M.L. 17·72-inch and 16-inch, and B.L. 13·5-inch and 12-inch.		
		42-inch ...		2 per shell filling room, for R.M.L. 12·5-inch to 10-inch, and B.L. 10-inch and 9.2-inch.		
		32-inch ...		2 per shell filling room, for R.M.L. 9-inch to 80-pr., B.L. 8-inch to 5-inch, R.B.L. 7-inch and Q.F. 4·7-inch.	For searching interior of shells before filling.	38407 Equipt. 1472
		20-inch ...		2 per shell filling room for R.M.L. 64-pr. to 25-pr., B.L. 4-inch and R.B.L. 40-pr. and 20-pr.		

* *See* note * on previous page.

Digitized by Google

Magazine Stores—*continued.*

TABLE 23—*continued.*	Proportions.	Remarks.
Woolwich Store Charge, No. 22—continued.		
Implements, fuze and shell* (38407 Equipt. 1472): Scrapers, shell, 17-inch	2 per shell filling room for R.M.L. 16-pr. to 7-pr., and R.B.L. 12-pr. to 9-pr.	For searching interior shell before filling.
Implements, fuze and shell* (38407 Equipt. 1472): Spanners, box... ...	1 per shell filling room	For S.B. ordnance, except mortars.
Implements, fuze and shell* (38407 Equipt. 1472): Wrenches, base plug	1 per shell filling room	For projectiles having base plugs.
Lanterns, hand, magazine† ...	1 per work †	Fitted with oil lamp.
Luting ... ... lbs.	As required	For closing lids of cartridge cases, &c.
Measures, powder: 12 oz. 3 oz.; 10 ,, 2½ ,,; 8 ,, 2 ,,; 7 ,, 1 ,,; 5 ,, ½ ,,; 4 ,, ¼ ,,	1 of each per laboratory or cartridge filling room, as may be required, according to nature of armament in the district.	For measuring bursting charges, &c.
Scoops, powder, 8½-inch ...	2 per cartridge and shell filling rooms.	For all ordnance.
Shellac ... ... ozs.	As required	For cement, for affixing tables, tape bands, &c.
Shovels, copper, small	1 per magazine or laboratory.	A hand brush will be supplied by the Barrack Department on inventory.
Woolwich Store Charge, No. 23.		
Hides, powder	As may be considered necessary by Officer Commanding R.A., according to description of work.§	Hides, with wadmiltilts over, are placed on the floor when barrels or cases are moved or opened.
Implements, fuze and shell, keys, electric, Q.F., large: inserting primer; removing primer	1 per 2 guns or less.	
Wadmiltilts	As may be considered necessary by O.C. R.A., according to description of work.‖	For protecting ammunition, or placing on the floor over hides when barrels or cases are moved or opened.
Woolwich Store Charge, No. 24.		
Blocks, wood, or shell holder...	2 per shell filling room, for shells filled through the base.	To be made locally.
Bolts, eye, lifting (38407 Equipt. 1472): large ...	6 per 17·72-inch gun ...	For lifting projectiles.
Bolts, eye, lifting (38407 Equipt. 1472): projectiles small ...	6 ,, 16-inch ,, ...	For lifting projectiles.
Boxes, plug and wad, rectangular (38407 Equip. 1631)	1 to 5 guns supplied with diaphragm Shrapnel shell.	For the papier mâché wads and spare loading hole plugs of the shell.

* *See* note * on page 446.
† 4 per work for 17·72-inch R.M.L. guns at Gibraltar and Malta.
‡ Colza oil and wick for these are supplied by the Army Service Corps as required.
§ But in no case to exceed 3 per magazine. For use in laboratories only.
‖ For 17·72-inch 3 Wadmiltilts per work.

Digitized by Google

Magazine Stores—*continued.*

TABLE 23—*continued.*	Proportions.	Remarks.
Woolwich Store Charge, No. 24—continued.		
Brushes, cement...	2 per cartridge filling room.	For applying shellac cement.
Cages { projectile, B.L., 6-inch / shell, R.B.L., 7-inch	1 per circular shell lift 1 per shell lift for 7-inch R.B.L. gun.	For raising the projectiles.
Clips, lifting projectiles, 7-inch to 12·5-inch.	2 per shell lift	R.M.L. ordnance only.
Discs, base plug { large	1 per empty common shell with O.P. base plugs 12-inch B.L. Marks I and II, 9·2-inch B.L. Marks I and II, and 6-inch B.L. Marks I and V.	To be fixed over head of plug after shell is filled.
Discs, base plug { small	1 per empty common shell with O.P. base plugs 6-inch B.L. Marks I, II and III, and 5-inch B.L. Marks I and II.	To be fixed over head of plug after shell is filled.
Implements, fuze and shell { Chisels, metal... / Hammers, metal	1 per shell filling room	For removing lead discs or rings from base of rifled shells.
Implements, fuze and shell { Holders, shell... ...	1 per shell filling room for each nature of shell.	For B.L. 6-inch and over and R.M.L. 80-pr. guns and over, and 6·6-inch howitzer, also 4·7-inch Q.F. gun.
Implements, fuze and shell { Spanner, gas check { nut, 7-in.	1 per shell filling room	For 9-inch R.M.L guns and over, except 17·72-inch R.M.L.
Implements, fuze and shell { Spanner, gas check { plug,* 6·3-inch.	1 per shell filling room	For 8-inch, 46 cwt. and 6·3-inch howitzers only.
Levers, extracting eye-bolt† ...	2 per 17·72-inch and 16-inch R.M.L. guns.	For removing eye-bolts and raising projectiles.
Plates, stencil, brass { Bag	1 per shell filling room	For marking all rifled filled shells which have their bursting charges enclosed in bags.
Plates, stencil, brass { Figures, block, sets	1 per shell filling room	For marking month and year of filling on filled shells.
Plates, stencil { Brass { P	1 per shell filling room	For marking shells filled with P and F.G. powder.
Plates, stencil { Brass { W, 1½-inch...	1 per work	For marking Palliser shot, formerly termed shell, when weighted up with sand.
Plates, stencil { Copper, ring ...	1 per shell filling room	For stencilling white band round head of steel shells.
Plates, stencil { Copper, ring ...	1 per shell filling room	For stencilling red band round head of filled shells.

* This spanner is not to be used for tightening fuze hole plugs.

† As these become unserviceable, the levers grummet (page 316) will be used for extracting the eyebolt.

73
3
6921

Digitized by Google

Magazine Stores—*continued.*

	TABLE 23—*continued.*	Proportions.	Remarks.
	Woolwich Store Charge, No. 24—continued.		
	Rings, base plug; large	1 per empty cast steel common shell with adapter or large base plug, 13·5-inch and 12-inch B.L., and 17·72-inch to 11-inch R.M.L.	To seal joint between adapter or plug and shell, after shell is filled.
38407 Equipt. 1631	**Rings,** base plug; small	1 per empty cast steel common shell with adapter or large base plug, 10-inch and 9·2-inch B.L., and 10-inch and 9-inch R.M.L.	To seal joint between adapter or plug and shell, after shell is filled.
	Stamps, steel, W., ½-inch ...	1 per work	For stamping base plugs of Palliser shot, formerly termed shell, when weighted up with sand.
	Woolwich Store Charge, No. 25.		
	Brushes, paint, sash tool, No. 4	2 per shell filling room	1 for stencilling shells, and 1 for cleaning the top of tute of Shrapnel shell after filling or emptying.
	Cans, oil, feeding, 1 pint ...	1 per work	For feeding the lantern.
38407 Equip. 1544	**Corkscrews**	1 per laboratory for 8-inch mortars.	For removing the cork plug.
	Knives, lamp	1 per work	For cleaning the grease out of the sockets of magazine lamps.
	Lamps, magazine* partition, passage, wall	According to the construction of the magazine.†	These lamps burn the same pattern candles as the fighting lanterns.
	Scissors, lamp ... pairs	1 per work	For trimming wicks.
	Woolwich Store Charge, No. 26.		
	Scales, weighing powder 28 lbs. ...	1 per cartridge filling room, for 9-inch guns and over.	To weigh the heaviest charges.
	Scales, weighing powder 8 ,, ...	1 per cartridge filling room, for lighter natures.	May also be demanded, where required, for mortar batteries.
57—Cape 5211	**Thermometers,** common ...	1 per magazine containing gunpowder, dry guncotton, or cordite. 1 per work for cartridge stores.	For use in ventilating magazines.
57—Gib. 5740			

* Candles for these are supplied by Army Service Corps, as required.
† 2 passage and 35 wall lamps per work are allowed for 17·72-inch guns.

Digitized by Google

Magazine Stores—*continued.*

TABLE 23—*continued.*	Proportions.	Remarks.
Woolwich Store Charge, No. 26—continued.		
Thermometers, wet and dry bulb.*	1 or more per sub-district in which are magazines, and 1 per laboratory where cartridges are filled.	To ascertain the state of atmosphere before filling cartridges.
Weights brass, 8, 4, 2, 1, ½, ¼ oz.	1 of each per laboratory	For weighing bursting charges.
Weights gun-metal 14, 7, 4, 2, and 1 lb.	1 of each per powder weighing scale, 28lbs.	
Weights gun-metal 7, 4, 2, and 1 lb.	1 of each per powder weighing scale, 8 lbs.	

57
Dover
2277

57—Gib.
5740

57
Caterham
106

*Wick and muslin will be supplied as required (*see* para. 110, Regulations for Magazines, 1894.)

TABLE 24. Army Books and Forms for Armaments.

Army No.	Subject.	Description.
Books.		
36	Expenditure	
37	Demands	
195	Equipment	Receipt and issue journal.
209A or 209B, C, or E	,, ...	Annual account.
211	,, ...	Distribution book for Master Gunners.
Forms.		
B 269	Station and regimental practice ...	Report.
F 754	Stores	Convoy note.
G 800	Stores for existing armaments	Annual estimate.
G 801	Stores for other than existing armaments	,,
G 805	Ammunition to replace that expended at practice	Demand.
G 819	Changes in armaments	Monthly return.
G 832	Entries made in A.F.G. 835	Annual report.
G 834	Carriages, &c., in O.S. charge	Monthly return.
G 835	Examination of garrison carriages ...	Memo.
G 844	Mounted ordnance	Annual returns.
MS.	Dismounted ordnance	,,
G 862	Gunpowder expended	Half-yearly return.
G 864	Gunpowder, examination of	Report.
G 865	Gunpowder on charge	Half-yearly return.
G 869	S.B. Ordnance	Annual return.
G 872	R.M.L. Ordnance	,,
G 873	Ordnance in charge of O.S.D.	Monthly returns.
G 875	Ordnance which have fired prescribed number of rounds	Statement.
G 877	Regulations for lighting magazines ...	Regulations.
G 879	Magazine, &c., care of	,,
G 885	Ordnance and general stores	Annual account.

57
Gen. No.
2656

Digitized by Google

Army Books and Forms for Armaments—*continued.*

TABLE 24—*continued.*

Army No.	Subject.	Description.
Forms.		
G 887	Ordnance and stores in charge of O.S.D.	Annual return.
G 899	Directions for making up cartridges for M.L. and B.L. rifled ordnance	Regulations.
G 902	Ordnance in charge of O.S.D.	Annual return.
G 905	Ammunition expended in firing salutes	Statement.
G 907	Lubrication of carriages and slides ...	Regulations.
G 908	Equipment of garrison ordnance ...	Statement.
G 908A	Royal Artillery stores	Annual account.
G 909	Machine guns	Annual return.
G 910	Instructions for the preparation of shells and fuzes, rifled ordnance	Regulations.
G 915	Care of disappearing carriages	General instructions.
G 920	History sheet of range-finding instruments	Record.
G 925	B.L., R.B.L. and Q.F. Ordnance ...	Annual return.
G 944	Thermometers	Daily record.
G 950	Joint armament return of all ordnance forming part of armament of works	Statement.
	Amendments to above	Annual Return.
G 951	Record of joint inspection of emplacements of heavy rifled guns	Statement.
	Amendments to above	Annual Return.
G 968	Camp equipment, regular services ...	Requisition.
G 980	Stores	Carrier's note.
G 997	Equipment in general (*blank*)	Requisition.
G 1027	Equipment in general, materials for repair	,,
G 1029	Paint, &c., for armaments	Requisition.
G 1033	Equipment in general (*blank*)	Receipt and issue voucher.
G 1049	Ammunition and stores	Transfer, conversion, and expenditure voucher.
G 1083	Inspection of armament and works ...	Annual report
G 1085	Stores deficient	Half-yearly report.
O 1677	Cleaning and painting guns, &c... ...	Working pay list.
P 1925	Equipment in general (*blank*)	Expense voucher.

Digitized by Google

2. GENERAL LISTS OF COMPONENT AND SPARE PARTS.

CONTENTS.

PAGE

Fittings and component and spare parts for Land Service B.L. guns (13·5-inch to 4-inch) 454

Fittings and component and spare parts for Land Service R.M.L. guns and howitzers 466

Fittings and component and spare parts for Land Service R.B.L. and S.B.B.L. guns 472

B.L. carriages, component and spare parts for 476

Slides, L., B.L., component and spare parts for (12-inch to 6-inch) 520

Carriages, garrison, R.M.L., component and spare parts for 544

Slides, L., R.M.L., component and spare parts for 578

Beds and carriages for medium ordnance, component and spare parts for 620

Moncrieff wrought-iron garrison carriages, component and spare parts for 642

Platforms, ground, and slides, L., for medium, rifled and S.B. ordnance, component and spare parts for 654

Fittings, component and spare parts of ordnance, quick-firing, 4·7-inch 664

Fittings, component and spare parts of ordnance, quick-firing, 12-pr. 12-cwt. A. 666

Component and spare parts for carriages, garrison, quick-firing, 4·7-inch, central pivot 668

Component and spare parts of carriages, garrison, quick-firing, 12-pr. 671

Spare stores allowed for working guns which form the armament of districts, and for magazines 673

Spare parts for pump, air, double, carriage, garrison disappearing 676

„ „ „ R.M.L. 6·6-inch gun 677

Spare parts of depression range-finders 677

Stores used in connection with position-finding 678

Digitized by Google

TABLE OF FITTINGS, COMPONENT, AND SPARE PARTS FOR B.L. LAND SERVICE GUNS.

Art.	Articles.	Component Parts.												Proportion of spare allowed to number of guns or less per fort or battery.
		13·5-inch.	12-inch, mark I and I A.	12-inch, Mark VI and VII.	10-inch.	9·2-inch, U.C., Mark I.	9·2-inch, C., Mark I.	9·2-inch, U.C., Mk. IV, IV A, and VI B.	9·2-inch, C., Mk. IV, VI, & VII.	8-inch, Mark VII.	6-inch, Mark IV and VI.	6-inch, Mk. V.	5-inch, Mark IV and V.	4-inch, Mk. IV	
	ORDNANCE, B.L.														
2920/54	**Band,** trunnion, steel, with 2 hinge bolts, 2 set screws, and 2 keys	1	...	...	...	...	...	...	...	...	...	...	...	...	...
	Blocks, tube, retaining, steel, with actuating lever, and securing pin; stop pin, lever axis pin and spiral spring; extractor with axis pin, spiral spring, and lanyard; and catch retaining actuating lever with spiral spring, bracket, 2 fixing screws, and guide	1	...	...	...	...	...	...	...	...	...	...	...	...	1 to 5
	Bolts, stop, steel, for breech screw	...	1	1	1	...	...	1	1	...	1	...	1	1	1 to 10
	Boxes, slide { bronze, in 2 parts	...	...	...	...	...	...	...	...	...	...	...	...	...	...
	Boxes, slide { steel, in 2 parts	1	...	...	...	...	...	...	...	...	...	...	...	...	...
	Boxes, slide { steel, in 2 parts, with 2 keys, 2 keep pins, lanyard bolt, nut and spiral spring	...	1	1	1	1	1	1	1	1	1	1	1	1	1 to 10
	Bracket { contact, bronze, in 2 parts, with 5 fixing screws (3 hexagon-headed, and 2 flat-headed) contact with insulating bush, 2 washers and retaining nut terminal with insulating bush, washer and securing nut	...	1	...	...	...	...	...	...	...	...	...	...	...	1 to 10
	Bracket { elevating, bronze, with 2 studs, 2 keep pins, and 6 fixing screws	...	1	1	...	...	...	...	...	...	...	...	...	...	...
	Bracket { elevating, bronze, with 2 pivots, 2 keep pins, 5 hexagon-headed and 1 flat-headed fixing screws	...	...	...	...	...	...	...	...	1	...	...	...	...	...
	Bracket { *foresight, land, bronze, with 2 fixing screws { left	...	...	...	1	...	...	...	...	...	...	...	...	...	...
		...	...	...	1	...	...	...	...	...	...	...	...	...	...
															right

Digitized by Google

(EQ. R.)

Bracket	foresight, land, bronze, with socket and 4 fixing screws	left	...	...	...	...	...	1	1	...	...	...	...	...	...	...	...
		right	...	...	...	...	...	1	1	...	...	...	...	...	...	...	...
	lanyard guide, steel, with 2 fixing screws and set screw		...	...	...	...	...	...	...	...	...	...	...	1	1	...	...
	retaining carrier, steel, open, with 4 fixing screws		...	...	...	...	...	...	...	...	...	...	1	...	...	1 to 5	
	spindle worm, bronze, with 4 fixing screws		...	...	...	...	1	...	...	...	...	...	...	...	...	...	
	tangent sight, land, left, bronze, with socket, set screw, and 4 fixing screws		...	...	...	...	...	1	...	...	1	...	...	...	...	...	
	tangent, sight, land, right, bronze, with socket, set screw, and 4 fixing screws		...	...	...	...	...	...	...	1	...	...	...	...	...	...	
	tangent, sight, land, right, bronze, with socket set screw, and 3 fixing screws 2·975 long and 1 6·7-in.		...	...	...	...	1	...	...	...	...	...	...	...	...	...	
Carrier	bronze, with hinge bolt and washer, hinge roller and axis pin; bearing roller (coned) with axis pin; 4 rollers for breech screw, with axis pins; cover plate, fixing screw and washer; stop for breech screw, with spiral spring; lever, directing stop, and axis pin; lever retaining carrier (closed), flat spring, and 2 fixing screws; stop retaining carrier (open), with spiral spring; spindle, releasing handle and keep pin, collar and keep pin, and lever, directing stop (retaining carrier open)		...	...	...	1	...	...	...	...	...	...	...	...	...	1 to 10	
	bronze, with hinge bolt, washer, rack pinion, worm wheel, collar, and 2 fixing screws; clutch with handle, hinge roller and axis pin, bearing roller (cone) with axis pin, 4 rollers for breech screw, with axis pins; cover plate, fixing screw, and washer; stop for breech screw, with spiral spring; lever directing stop, and axis pin; lever, retaining carrier (closed), flat spring and 2 fixing screws; stop retaining carrier (open), with spiral spring, spindle releasing handle and keep pin, collar and keep pin and lever, directing stop (retaining carrier open), chain and stop pin		...	...	...	...	1	...	...	...	...	...	...	...	...	1 to 10	
	bronze, with hinge bolt and lubricating screw, bearing collar washer and keep pin; lever retaining carrier open, with axis pin, washer,		...	...	...	...	...	...	...	...	1	...	...	...	...	1 to 10	

NOTE.—The letter S denotes the guns to which the items are issued spare. The figures show the component of the guns, and their number.

* A few guns only are fitted thus.

Digitized by Google

Table of Fittings, Component, and Spare Parts for B.L. Land Service Guns—*continued.*

Articles.	Component Parts.													Proportion of spare allowed to number of guns or less per fort or battery.
	13·5-inch.	12-inch, Mark I and I A.	12-inch, Mark VI and VII.	10-inch.	9·2-inch, U.C., Mark I.	9·2-inch, C., Mark I.	9·2-inch, U.C., Mk. IV, IV A, and VI B.	9·2-in., C., Mk. IV, VI, & VII.	8-inch, Mark VII.	6-inch, Mark IV and VI.	6-inch, Mk. V.	5-inch, Mark IV and V.	4-inch, Mk. IV.	
Carrier	...	...	...	...	...	...	...	...	...	...	1	...	...	1 to 10
Catch	...	...	...	1	...	...	1	1	...	...	...	...	...	1 to 10
Contacts	...	...	...	1	...	1	...	1	...	...	...	...	...	1 per gun

keep pin, flat spring, and fixing screw; lever retaining carrier closed, with axis pin, washer, keep pin, pin actuating and spiral spring; and stop for breech screw, with spiral spring.

lever, axis pin, washer, and keep pin

bronze, with hinge bolt, washer and keep pin, lever retaining carrier (open), with axis pin, washer and keep pin, flat spring and fixing screw; lever retaining carrier (closed), with axis pin, washer and keep pin, plunger and spiral spring

retaining ratchet lever, steel, with axis pin, washer, and keep pin

retaining ratchet lever, steel, with bracket, and 2 fixing screws, axis pin washer and 2 keep pins

electric, aluminium bronze, with insulating bush, 2 washers and retaining nut, terminal with insulating bush, washer and securing nut

electric frame fixed, aluminium bronze, with insulating bush and washer; washer, case, and retaining nut and fixing screw; terminal with insulating bush, washer and retaining nut (and bracket with 2 fixing screws for 12 inch) (and cover plate with 3 screws for 10-inch guns, and 2 screws for 9·2-inch IV, IV A.U.C. and VI B.)

Digitized by Google

Contacts	electric, fixed, aluminum bronze, with stud, bracket, and insultating bush, 2 washers, retaining nut, and 2 fixing screws terminal with insulating bush, washer, and retaining nut and bracket	...	...	...	...	1	1	...	...	...	...	...	...	...	1 to 5
	lock electric B, aluminium bronze, consisting of block with two terminal points, insulating bush and washer; washer and retaining nut and lead; contact upper, with insulating bush and washer, case, nut, and spiral spring	...	S	S	S	S	S	S	S	...	...	...	...	...	6 per gun
	lever, breech, screw, bronze, with nut and lead, insulating bush (in 2 parts); and cover with 2 fixing screws	1	...	...	...	...	...	...	...	...	...	...	...	...	1 per gun
	strip, retaining, bronze, with nut and lead, insultating block in 2 parts; and cover with 2 fixing screws	1	...	...	...	...	...	...	...	...	...	...	...	...	1 per gun
Cover	lead, copper, with strap, securing, and 2 fixing screws	1	...	...	...	...	...	...	...	...	...	...	...	...	...
	lead, bronze with 4 fixing screws	...	1	1	...	...	...	...	...	...	...	...	...	...	...
	lead, bronze with 3 fixing screws	...	...	...	1	...	...	1	1	...	...	...	...	...	...
	lead, bronze with 2 fixing screws	...	...	...	...	1	1	...	...	...	...	...	...	...	...
Cups, obturating	large	...	...	...	...	...	...	...	...	8	...	8	...	...	2 per gun
	small	...	...	...	...	...	...	...	...	1	...	1	...	...	2 per gun
Discs	cup, brass, adjusting, obturating cup	...	...	...	...	...	...	...	...	8	...	8	...	...	3 per gun
	pad, obturating: adjusting, steel	2	2	2	2	2	2	2	2	...	2	...	2	2	5 per gun*
	pad, obturating: protecting, tin, 2 to a set, front and rear	1	1	1	1	1	1	1	1	...	1	...	1	1	5 per gun†
Extractor	lock, electric wired, steel with axis pin, spiral spring and lanyard, also block tube retaining	8	...	...	...	...	...	...	...	...	...	...	...	...	2 per gun
	lock, electric B, steel, with axis pin, spiral spring and lanyard (also for lock, percussion D)	...	S	S	S	S	S	S	S	...	...	...	...	...	4 per gun
Guide for lock, steel, with spiral spring and set screw...		...	...	...	...	...	...	...	...	...	...	1	...	...	...
Lanyard bolt, steel, with spring and nut		...	...	...	...	...	...	...	...	8	8	8	8	8	1 per gun
Lanyard guide, bronze or steel		...	...	...	...	...	...	...	...	...	1‡	...	1	1	‡V.C.P.&B.
Lever	breech screw, steel, actuating breech screw, with bolt-securing, nut, washer, and keep pin, 8 spiral springs (4 left and 4 right hand) and disc; electric ejector, with insulating bush; cover in 2 parts,	1	...	...	...	...	...	...	...	...	...	...	...	...	...

* 2 per gun, 13·5-inch, 6-inch, 5-inch, and 4-inch. † 2 per gun, 13·5-inch, and 3 per gun, 6-inch, 5-inch, and 4-inch.

Digitized by Google

Table of Fittings, Component and Spare Parts for B.L. Land Service Guns —*continued.*

Articles.	Component Parts.												Proportion of spare allowed to number of guns or less per fort or battery.
	13·5-inch.	12-inch, Mark I and I A	12-inch, Mark VI and VII.	10-inch.	9·2-inch, U.O., Mark I.	9·2-inch, C., Mark I.	9·2-inch, U.C., Mk. IV, IV A, and VI B	9·2-in., C., Mk. IV, VI, & VII.	8-inch, Mark VII.	6-inch, Mark IV and VI.	6-inch, Mk. V.	5-inch, Mark IV and V.	4-inch, Mk. IV.	
Lever														
with set screw and terminal with insulating block, clamping screw, nut and fixing screw, and earth terminal, screw for oil-hole and wedge	...	S	S	S	S	S	S	S	...	...	...	...	...	1 to 10
cam, steel, with hinge bolt, nut, and keep pin	...	...	...	...	...	...	...	S	...	S	S	S	S	1 to 10
cam, steel, with hinge bolt and keep pin (except 6-in. V.) (washer 6-in. V.)	...	...	...	...	...	...	...	...	S	...	...	...	...	1 to 10
cam, steel, with hinge bolt and keep pin, catch and spiral spring	...	S	S	S	S	S	S	S	...	...	...	...	...	2 per gun
cocking, lock, percussion D, steel, with axis pin	...	1	1	1	1	1	1	1	...	...	...	...	...	1 to 10
ratchet, breech screw, steel (locking and unlocking) with removable plate and 3 fixing screws, axis pin, washer, and keep pin; ratchet wheel, with tappet and fixing screw; pawl, with axis pin and handle: pin directing, pawl with spiral spring; link for ratchet, link for sliding block, with hinge bolt, and sliding block with gudgeon	...	...	...	...	...	...	...	...	...	...	...	...	...	
spindle, worm, steel	...	...	...	S	S	...	S	S	...	...	...	...	...	1 to 5
Locks														
electric B, steel (for wired tubes), consisting of frame, block with 2 terminal points, insulating bush and washer; washer and retaining nut; lead and retaining cap; contact upper insulating bush and washer; washer, case, and nut, spiral spring and cap retaining contact; cover for lead; guide bolt, with spiral spring, handle, and keep pin; extractor, with axis pin, spiral spring, and lanyard	...	1	1	1	1	1	1	1	...	...	...	...	...	1 per gun

Digitized by Google

| | | |

Table of Fittings, Component, and Spare Parts for B.L. Land Service Guns—*continued.*

Articles.	Component Parts.											Proportion of spare allowed to number of guns or less per fort or battery.
	18·5-inch.	12-inch, Mark I and I A.	12-inch, Mark VI and VII.	10-inch.	9·2-inch, U.C., Mark I.	9·2-inch, C., Mark I.	9·2-inch, U.C., Mk. IV, IV A, and VI B.	9·2-in., C., Mk. IV, VI, & VII.	8-inch, Mark VII.	6-inch, Mark IV and VI.	6-inch, Mk. V.	5-inch, Mark IV and V.	4-inch, Mk. IV.	
Pin, securing, lock, electric wired, steel, bulb-head, for lever actuating; also block tube retaining	S	...	...	...	...	...	...	...	...	...	...	...	...	2 per gun
Pinion, rack, steel, gear controlling, breech screw	...	...	...	S	...	S	...	S	...	...	...	...	...	1 to 10
Plate elevating, carriage, garrison, disappearing, Mark I (Mark I), bronze, with 2 pivots and 2 keep pins, 2 washers and 2 keep pins, and 8 fixing screws	...	...	...	...	2	...	...	...	...	...	...	...	...	...
Plate hinge, steel, with 3 fixing screws‡	...	...	...	...	1	1	...	...	...	...	...	...	...	1 to 5
Plate preserving, bolt securing, bronze, with 4 fixing screws	1	...	...	...	...	...	...	...	...	...	...	...	...	...
Plate preserving, sight, telescopic, bronze, with 2 fixing screws	...	...	...	...	...	...	...	...	...	...	...	1	1	...
Plate preserving, sight, tangent, bronze, with 1 fixing screw	...	...	...	...	...	1	...	...	...	...	...	1	1	...
Plug, preserving, foresight, bronze	...	...	...	...	...	...	...	...	...	...	...	1	1	...
Rack, breech screw, steel, gear controlling, breech screw ...	...	...	...	S	...	S	...	S	...	...	...	...	...	1 to 10
Ring carrier, with hinge bolt and keep pin; roller frame, with 7 coned rollers (with axis pins and keep pins, bearing plate, and 4 fixing screws for Mark I.) (2 bearing plates for Mark I), 2 bearing rollers, with axis pins and blocks; clip retaining, with axis pin and flat spring, and friction roller with axis pin	...	1	...	...	...	...	...	...	...	...	...	...	...	1 to 10
Ring carrier, bronze, with hinge bolt, 4 bearing rollers, with blocks; clip, retaining, with axis pin and flat spring; roller frame, with 7 coned rollers, 2 bearing plates, and washer	...	...	...	...	...	...	...	...	...	...	...	...	...	

Digitized by Google

| | | |

Table of Fittings, Component, and Spare Parts for B.L. Land Service Guns—*continued.*

Articles.	Component Parts.												Proportion of spare allowed to number of guns or less per fort or battery.
	13·5-inch.	12-inch, Mark I and I A.	12-inch, Mark VI and VII.	10-inch.	9·2-inch, U.C., Mark I.	9·2-inch, C. Mark I.	9·2-inch, U.C., Mk. IV, IV A, and VI B.	9·2-in., C., Mk. IV, VI, & VII.	8-inch, Mark VII.	6-inch, Mark IV and VI.	6-inch, Mk. V.	5-inch, Mark IV and V.	4-inch, Mk. IV.	
Screws { screw for 12-inch I and I A); link for cam groove; and rack for breech screw for 10-inch, and 9·2-inch and screw, preserving, eye-bolt (except 9·2-inch.)	...	...	...	...	1	1	1	...	...	...	...	...	...	1 to 10
Screws { breech, steel, with end plate and 6 fixing screws; cam lever, with hinge bolt, nut and keep pin; catch cam lever up (in 2 parts), with retaining screw and flat spring; link for cam groove (and rack, breech screw for 9·2 inch C. Mark I.)	...	...	...	...	...	...	...	...	1	...	...	...	...	1 to 10
Screws { breech, steel, with end plate, guide for link, and 6 fixing screws; cam lever hinge bolt, and keep pin; catch, cam lever, with lever releasing, axis pin, and spiral spring; link for cam groove, stop pin, for lock, with lever directing and spiral spring.	...	...	...	...	...	...	...	...	...	1	...	...	...	1 to 10
Screws { breech, steel, with end plate and 2 securing screws, disc, handle, and 2 set screws; cam lever, and hinge bolt, catch, cam lever up, with lever axis pin and spiral spring; catch, cam lever down, with lever, axis pin and spiral spring; stop lever for lock, axis, pin, flat spring and fixing screw	...	...	...	...	...	...	...	...	...	1	...	1	1	1 to 10
Screws { breech, steel, with cam lever, hinge bolt, and keep pin; stop pin, spiral spring and guide screw (and catch with spiral spring for 6-inch)	...	...	...	...	...	...	...	...	...	...	...	...	...	...
Screw, plate, elevating, carriage, garrison, disappearing Mark I (Mark I):—					S									2 per gun
Fixing, steel		...	...	...	8	...	...	...	...	...	...	...	...	...
Preserving, steel		...	...	...	...	...	...	...	...	...	...	...	...	...

Digitized by Google

| | | |

Table of Fittings, Component, and Spare Parts for B.L. Land Service Guns—*continued.*

Articles.	Component Parts.										Proportion of spare allowed to number of guns or less per fort or battery.
	13·5-inch.	12-inch, Mark I and I A.	12-inch, Mark VI and VII.	10-inch.	9·2-inch, U.C., Mark I.	9·2-inch, C., Mark I.	9·2-inch, U.C., Mk. IV, IV A, and VI B.	9·2-in., C., Mk. IV, VI, & VII.	8-inch, Mark VII.	6-inch, Mark IV and VI.	6-inch, Mk. V.	5-inch, Mark IV and V.	4-inch, Mk. IV.	
Studs — catch { No. 1	...	...	...	...	1	1	...	...	...	...	...	...	...	1 to 5
catch { No. 2	...	...	...	...	1	1	...	...	...	...	...	...	...	1 to 5
elevating, steel	...	S	S	...	...	...	...	...	...	...	...	...	...	1 to 5
steadying, steel	...	1	1	...	...	...	...	...	...	...	...	...	...	1 to 5
stop, breech screw { closed	...	...	...	...	...	...	...	...	1	...	...	...	...	...
stop, breech screw { open	...	...	...	...	...	...	...	...	1	S	S	S	S	4 per gun
Trigger — lock, percussion, steel, with axis pin	...	...	...	...	...	...	...	...	S	...	...	...	...	2 per gun
lock, percussion D, steel, with axis pin	...	S	S	S	S	S	S	S	S	S	S	S	S	4 per gun
guard, steel, with screw, percussion lock	...	...	...	...	...	...	...	...	...	...	...	1	1	1 per gun
steel	...	...	...	...	...	...	...	...	...	1	...	...	...	1 per gun
Vent, axial — steel, with spring, nut, and washer	...	1	1	1	1	1	1	...	1	1	1	...	...	1 per gun
steel, with washer	...	...	...	...	...	...	...	...	...	...	...	...	...	1 per gun
Special Implements.														
Bolt, eye, breech screw, steel	S	S	S	...	...	...	...	...	...	...	...	...	...	1 to 5
Lever — extractor, steel for lock, electric B and lock percussion D	...	S	S	S	S	S	S	S	S	...	...	...	...	1 to 5
lengthening, cam lever	...	...	...	...	...	...	...	...	...	1	1	...	...	1 per gun
Tommy	...	...	...	...	...	...	...	...	1	...	1	...	...	1 to 5
Tray — cartridge	...	...	...	...	1	1	...	1	...	1	...	...	...	1 to 2
loading	...	1	1	1	...	...	1	...	1	...	1	...	...	1 to 2
shot	...	...	...	...	1	1	...	1	...	...	...	...	...	...

Digitized by Google

| | | |

FITTINGS AND COMPONENT AND SPARE PARTS

Articles	Ordnance, R.M.L. Guns. 12·5-in., Mark I.	12·5-in., Mark II.	12-in., 35 ton.	12-in., 25 ton.	11-in.	10·4-in.	10-in.	9-in.	7-in., 7 ton.
Vocabulary Section V. (1).									
Derricks, loading, muzzle, bronze, with band, 2 hinge screws, and fixing screws	1	...	1	...	1*	...	1	1	...
Lanyard-guides, wrought-iron guns	1	...	1	1	1	...	1	1	1
FITTINGS.									
Ordnance, R.M.L. 38407 Equip. 1502 — bolts, cascable elevating, with washer and keep pin	...	...	...	...	...	...	...	...	...
bolts, eye, trunnion	...	...	...	...	...	...	...	...	2†‡
boxes, slide, in 3 parts	...	...	...	...	...	1	...	...	...
brackets, arc, graduated, with fixing screws, bolt, washer, and keep pin	...	...	...	...	...	...	...	...	...
brackets, fore sight with fixing screws	...	...	...	...	...	2	...	...	...
brackets, hydro-clinometer bronze, with 3 fixing screws	1§	...	...	...	...	...	...	...	...
brackets, hydro-clinometer bronze, with 2 fixing screws	...	...	...	...	...	...	1§	...	...
brackets, tangent sight	...	...	...	...	...	2	...	...	...
cascables, slinging	...	*b*	...	...	...	*b*	...	...	...
collars, cascable, elevating (2 to a set) ...	...	...	...	...	...	...	...	‡2†	...
contacts, electric, aluminium, with insulated bush, case, 2 washers, and nut, cylinder for contact, and spiral spring, bracket, insulating plate, and 2 fixing screws with insulating bushes, socket for lead, with lead and cap	...	...	...	...	...	1	...	...	...
discs, pad obturating, adjusting	...	...	...	...	...	2	...	...	...
discs, pad obturating, protecting (2 to a set, front and rear)	...	...	...	...	...	1	...	...	...
holders, tube, with extractor and spring	...	3	...	...	...	...	...	...	...
holders, vent, axial (with cam lever, hinge bolt, set screw, and link)	...	...	...	...	...	1	...	...	...

* Mark II. gun.
† When mounted on Moncrieff carriage Mark II only.
‡ 1 left and 1 right.
§ For 12·5-inch Mark I and 10-inch Mark II guns when mounted on small port carriage.

Digitized by Google

FOR LAND SERVICE R.M.L. GUNS AND HOWITZERS.

Ordnance, R.M.L.												Remarks.
Guns.								Howitzers.				
7-in., 6½ ton.	6·6-in.	80-pr.	64-pr., 71 cwt.	64-pr., 64 cwt.	64-pr., 58 cwt.	40-pr.	25-pr.	8-in., 70 cwt.	8-in., 46 cwt.	6·6-in.	6·3-in.	
...	...	...	...	...	...	...	...	...	...	...	...	The hinge screws of the 12-in. 35 ton and 11-in. have loops. 2 of the fixing screws of the 12·5-in. and 10-in. have loops. Muzzle derricks are not used with guns mounted behind shields, or where the slide is fitted with fixed loading stages, nor with 10·4-in. and 9-in. Mark VIA guns.
1	...	1	1	1	1	...	...	...	...	...	...	
...	...	...	...	...	...	...	1	...	...	...	...	
...	...	...	...	...	2†‡	...	...	...	...	...	...	1 to every 5 guns spare.
...	...	...	...	...	...	...	...	...	...	...	...	1 to 5 spare.
1i	...	...	...	...	...	...	...	...	...	...	...	i When mounted on wrought-iron sliding garrison carriage.
...	...	2†	2†	...	1	...	...	...	...	...	...	
...	...	...	...	...	...	...	...	...	...	...	...	
...	...	...	...	...	...	..	...	...	...	...	...	
...	...	...	...	...	...	...	...	...	...	...	...	
...	...	...	...	...	...	...	...	...	...	...	...	ò 1 per fort.
...	...	...	...	...	...	...	...	...	...	...	...	
...	...	...	...	...	...	...	...	...	...	...	...	1 per gun spare.
...	...	...	...	...	...	...	...	...	...	...	...	2 per gun spare.
...	...	...	...	...	...	...	...	...	...	...	...	3 per gun spare.
...	...	...	...	...	...	...	...	...	...	...	...	
...	...	...	...	...	...	...	...	...	...	...	...	1 to every 5 guns spare.

NOTE.—Fixing screws are supplied in the proportion of 1 to every 5 or less number of screws of the same nature per gun. 1 spare gun or howitzer will be allowed, if available, for 20 pieces or less of the same nature in each district abroad.

Digitized by Google

Fittings and Components and Spare Parts for

Articles.	Ordnance, R.M.L. Guns. 12·5-in., Mark I.	12·5-in., Mark II.	12-in., 35 ton.	12-in., 25 ton.	11-in.	10·4-in.	10-in.	9-in.	7-in., 7 ton.
levers, cam	...	...	...	...	...	*a*	...	...	...
locks, electric, steel, consisting of frame with contact, and terminal with insulating bushes and nut, guide bolt and spiral spring, earth terminal with nut, and extractor (in two parts) with spiral spring	...	...	...	...	...	1	...	...	...
pads, obturating	...	...	...	...	...	1	...	...	...
plates, elevating, with pivot, keep pin, and fixing screws	2§	2§	2‖	2‡	2‡	1	‡2*n*	2‡	2‡
plates, elevating, with washer, retaining screw, and fixing screws	...	...	...	...	...	...	...	...	...
plates, elevating, counterweight, with bolt, keep pin, washer, and fixing screws, carriage, Mark II.	...	...	...	...	...	...	...	2†	1†
plates, elevating, overbank carriage, with bolt, keep pin, washer, and fixing screws	...	...	...	...	...	...	...	...	...
plates, index, with reader, yard scale plate, and fixing screws	1	...	1	1	1	...	1	1	...
plates, trunnion	...	...	...	...	...	...	...	2‡	2‡
screws, bracket, arc, graduated preserving	...	...	...	...	...	...	...	...	...
screws, bracket, sight, preserving ...	...	...	...	...	...	16	...	...	...
screws, eye-bolt, trunnion, preserving...	...	...	...	...	...	...	...	...	2†
screws, lanyard-guide, preserving ...	1	...	1	1	1	...	1	1	1
screws, pin, friction tube, preserving ...	2	...	2	2	2	...	2	2	2
screws, plate, elevating, preserving ...	12¶	12¶	8	8	8	4	8	8	8*
screws, plate, elevating, preserving, counterweight, carriage	...	...	...	...	...	...	...	...	...
screws, plate, elevating, preserving, overbank, carriage	...	...	...	...	...	...	...	...	...
screws, plate, trunnion, fixing ...	...	...	...	...	...	...	...	...	...
screws, plate, trunnion, preserving ...	...	...	...	...	...	...	...	...	...
screws, shutter frame, preserving ...	...	6	...	...	...	...	...	...	...
screws, stud, trunnion, preserving ...	...	...	...	...	...	...	...	2†	...
shutters, consisting of frame with 6 fixing screws, spring retaining wires, with 2 fixing screws, guide pulley with axis pin; shutter, with hinge bolt and 2 fixing screws, 2 latches, with 2 studs, and 2 spiral springs, handle with 2 pivot pins, and 2 links actuating latches, wheel-lanyard guide with pulley, axis pin, hinge bolt, flat spring, fixing screw, chain, and eye-bolt; socket supporting vent with 4 fixing screws, guide for tube holder, 1 electric shutter plug, and 1 friction shutter plug	...	1	...	...	...	...	...	...	...

57 Portsmouth 2089

73 3 3695

† When mounted on Moncrieff carriage Mark II only. ‡ 1 left and 1 right.
§ 1 lower, 1 upper, and 1 right in addition when mounted for small port only.
‖ 1 lower and 1 upper.
¶ 7 additional preserving screws required when mounted for small port.

Digitized by Google

Land Service R.M.L. Guns and Howitzers—*continued.*

Ordnance, R.M.L.												Remarks.
Guns.								Howitzers.				
7-in., 6½ ton.	6·6-in.	80-pr.	64-pr., 71 cwt.	64-pr., 64 cwt.	64-pr., 58 cwt.	4 -pr.	25-pr.	8-in., 70 cwt.	8-in., 46 cwt.	6·6-in.	6·3-in.	
...	...	...	...	...	...	...	...	...	...	...	...	*a* 1 to every 2 guns spare.
...	...	...	...	...	...	...	...	...	...	...	...	And 1 per gun spare.
...	...	...	...	...	...	...	...	...	...	...	...	And 3 per gun spare.
2‡	...	...	...	1	...	1	1	1	1	1	1	1 pivot spare to every 10 plates of each nature, and 2 spare keep pins per gun.
...	2‡	...	...	...	...	...	...	...	...	...	...	
...	...	...	...	...	1†	...	...	...	...	...	...	1 keep pin per gun spare.
...	...	...	...	...	...	2	2	...	...	...	...	2 keep pins per gun spare. 1 breech and 1 muzzle, fitted with scale plate, right side only.
...	...	...	...	...	...	...	...	...	...	...	...	
...	2‡	...	...	...	2†‡	...	...	...	...	...	...	
4‡	...	...	...	...	...	...	...	...	...	...	...	‡ When mounted on wrought-iron sliding garrison carriage.
...	...	4	4	...	2	...	...	...	...	...	...	
...	...	...	...	...	2†	...	...	...	...	...	...	
1	...	1	1	1	1	...	...	...	...	...	...	
2	...	2	2	2	2	...	...	...	...	...	...	
8	8	...	...	4	...	4	3	4	3	4	4	
...	...	...	...	...	6	...	...	...	...	...	...	
...	...	...	...	...	...	8	8	...	...	...	...	
...	2‡	...	...	...	...	...	...	...	...	...	...	1 left and 1 right to every 5 guns spare
...	2	...	...	...	...	...	...	...	...	...	...	
...	...	...	...	...	...	...	...	...	...	...	...	
...	...	...	...	...	...	...	...	...	...	...	...	
...	...	...	...	...	...	...	...	...	...	...	...	4 springs for latches, and 1 wheel lanyard guide complete to each gun spare.

57
Porte'th
2089

n Special plates are required for small port mounting.
* When mounted on Mark I. Moncrieff carriage 6 extra.

Digitized by Google

Fittings and Component and Spare Parts for

Articles.	Ordnance, R.M.L. Guns. 12·5-in., Mark I.	12·5-in., Mark II.	12-in., 35 ton.	12-in., 25 ton.	11-in.	10·4-in.	10-in.	9-in.	7-in., 7 ton.
ORDNANCE, R.M.L.									
SPECIAL IMPLEMENTS.									
Ordnance, R.M.L. sockets, vent, axial, with 3 fixing screws	...	...	...	...	...	1	...	...	...
Ordnance, R.M.L. studs, trunnion	2*m*	2	...	...	...	...	...	2§§	...
Ordnance, R.M.L. vents, axial, with washer, nut, and double key	...	1	...	...	...	...	...	...	...
Ordnance, R.M.L. vents, axial	...	...	...	...	...	1	...	...	...
Tommies, contact	...	...	...	...	...	1	...	...	...
Wrenches holder, tube	...	1	...	...	...	...	...	...	...
Wrenches nut, vent	...	1	...	...	...	...	...	...	...
Wrenches plug, shutter	...	1	...	...	...	...	...	...	...
Wrenches shutter	...	1	...	...	...	...	...	...	...
Wrenches steel vent, cone	...	...	...	...	...	...	...	*a*††	...
73 / 3 / 5952 APPURTENANCES.									
Bits, vent 36-inch	...	1	...	...	...	...	...	...	...
Bits, vent 20 ,, ...	...	...	...	...	...	1	...	1††	...
Clamps, tangent sight A	3	3	3	...	...	...	2	...	2
Clamps, tangent sight B	...	...	...	...	...	...	...	...	...
Clamps, tangent sight C	...	...	...	2	2	2	...	2	...
Clamps, tangent sight D	...	...	...	...	...	...	...	...	...
Drifts, vent, 36-inch	...	1	...	...	...	...	...	...	...
Extractors, tube VM	...	1	...	...	...	...	...	...	...
Extractors, tube F special	...	*b*	...	...	...	*b*	...	...	...
Extractors, tube P	...	...	...	...	...	...	...	1††	...
Extractors, tube P special	...	...	...	...	...	...	...	1††	...
Rimers, vent, axial	...	1	...	...	...	1	...	1††	...
Rods, vent 36-inch	...	1	...	...	...	...	...	...	...
Rods, vent 20 ,, ...	...	...	...	...	...	1	...	1††	...
Sights fore B	...	...	...	...	...	2	...	...	...
Sights fore D	...	...	...	...	...	...	...	...	...
Sights fore G	3	3	3	...	...	...	1c*	1c*e	...
Sights fore H‡	...	...	...	2§	2§	...	2	2e	1*
Sights fore J	...	...	...	...	...	...	...	...	2d
Sights fore L†	...	...	...	...	...	...	...	...	...
Sights fore centre	...	...	...	...	...	...	...	...	...
Sights hind, centre	...	...	...	1*	1*	...	1*	1*e	1*
Sights muzzle	...	...	...	...	...	...	...	...	...
Sights reflecting fore...	2*m*	2*m*	...	...	...	...	...	...	...
Sights reflecting hind, with tangent scale bar and clamp bracket with reflector	2*m*	2*m*	...	...	...	...	...	...	...
Sights tangent	3	3	3	2	2	2	2	2e	2
Sights crossbar fore	...	...	...	...	...	...	...	...	...
Sights crossbar tangent	...	...	...	...	...	...	...	...	...

* When mounted behind shields only.
† Any D Sights at present with the guns will be first worn out.
§ 3 required when mounted behind shields.
c. Centre. *d.* Sides. *e.* Except guns on high angle carriages.
§§ When mounted on Moncrieff carriages Mark II only.

Digitized by Google

Land Service R.M.L. Guns and Howitzers—*continued.*

Ordnance R.M.L.												Remarks.
Guns.								Howitzers.				
7-in., 6½ ton.	6·6-in.	80-pr.	64-pr., 71 cwt.	64-pr., 64 cwt.	64-pr., 58 cwt.	40-pr.	25-pr.	8-in., 70 cwt.	8-in., 46 cwt.	6·6-in.	6·3-in.	
...	...	...	...	...	...	...	...	...	...	...	...	
...	...	...	...	...	...	...	...	...	...	...	...	
...	...	...	...	...	...	...	...	...	...	...	...	1 spare per gun, and 12 washers spare per gun.
...	...	...	...	...	...	...	...	...	...	...	...	
...	...	...	...	...	...	...	...	...	...	...	...	For removing tube holder from vent.
...	...	...	...	...	...	...	...	...	...	...	...	For securing nut.
...	...	...	...	...	...	...	...	...	...	...	...	For removing shutter plugs.
...	...	...	...	...	...	...	...	...	...	...	...	For removing fixing screws of shutters, elevating plates and pivots.
...	...	...	...	...	...	...	...	...	...	...	...	*a* 2 per work.
...	...	...	...	...	...	...	...	...	...	...	...	
...	...	...	...	...	...	...	...	...	...	...	...	
2	...	...	...	...	...	...	...	...	...	...	...	
...	2	2	2	2	...	...	...	2	1	2	1	1 to 10 or less number of clamps of same nature spare.
...	...	...	...	...	...	...	...	...	...	...	...	
...	...	...	...	...	...	2	2	...	...	...	...	
...	...	...	...	...	...	...	...	...	...	...	...	
...	...	...	...	...	...	...	...	...	...	...	...	2 per gun spare.
...	...	...	...	...	...	...	...	...	...	...	...	*b* 1 to 5 guns spare.
...	...	...	...	...	...	...	...	...	...	...	...	
...	...	...	...	...	...	...	...	...	...	...	...	
...	...	...	...	...	...	...	...	...	...	...	...	1 to 2 guns spare.
...	...	...	...	...	...	...	...	...	...	...	...	
...	...	...	...	...	...	...	...	...	...	...	...	
...	...	...	...	...	...	2	2	...	...	...	...	
...	2	...	...	...	...	...	...	...	...	...	...	
...	...	...	...	...	...	...	...	...	...	...	...	
1*	...	...	...	1*	...	..	...	...	...	...	...	
2*d*	...	...	...	...	...	...	...	...	...	...	...	1 spare to every 10 or less number of sights of same nature.
...	...	2	2	2	...	..	...	...	...	...	...	
...	...	...	...	...	1	...	...	...	...	...	...	
1*	...	...	...	1*	1	...	...	...	...	...	...	
...	...	...	...	...	1	...	...	...	...	...	...	
...	...	...	...	...	...	...	...	...	...	...	...	
...	2	...	...	...	...	...	...	...	...	...	...	1 glass mirror of each nature per gun and 1 mirror with frame complete, to every 10 or less number of guns when sighted upon both sides, spare.
2	2	2	2	2	...	2	2	...	...	...	...	1 spare to every 10 or less number of sights of the same nature.
...	1	...	...	...	...	1**	1**	2	1	2	1	
...	1	...	...	...	...	1**	1**	2	1	2	1	

m. When mounted on small port only.

‡ Any C sights at present with the guns will be first worn out.

†† For guns on high-angle carriages only.

** For siege train only. The 40-pr., Mark I, (34 cwt.) is not furnished with crossbar sights.

Digitized by Google

FITTINGS AND COMPONENT AND SPARE PARTS FOR LAND SERVICE R.B.L. AND S.B.B.L. GUNS.

	Articles.	Ordnance, R.B.L.							Ordnance S.B. B.L. 32-pr.	Remarks.
		7-in., 82 cwt.				40-pr.				
		Land Service.	Fitted for Moncrieff Carriage, Mark II.	Fitted for Carr. Garr. Sliding, Medium, No. 1.	7-in., 72 cwt.	35 cwt.	Side Closing.	20-pr., 16 cwt.		
	Vocabulary Section V. (1).									
	Clamps, tangent sight { A	...	...	...	...	2	2	...	...	1 spare to every 10 or less number of clamps of the same nature.
	{ C	2	2	2	...	...	...	...	...	
	FITTINGS.									
Ordnance, R.B.L.	Bands, elevating, with pivot and keep pin	...	...	...	...	1*	...	...	...	1 pivot to every 10 or less number of guns, spare.
	Blocks, breech, with obturating ring ...	...	...	...	...	...	1†	...	...	2 spare to each gun and 2 copper rings extra, per gun.
	Bolts, eye, trunnion	...	2**	...	...	...	...	...	...	1 to every 5 guns, spare.
	Brackets, guide, upper with 3 fixing screws, lower with 5 fixing screws, stud stop (movable) with spiral spring	...	...	...	...	...	2‡	...	...	1 upper and 1 lower, spare, to every 10 or less number of guns; also 2 spiral springs and 2 fixing screws per gun, spare.
	Bushes, breech	§	§	§	§	‖	‖	...	...	
	Eyes, elevating, with bolt, washer, and keep pin	...	...	...	...	...	...	1	...	1 keep pin per gun, spare.
	Pieces, vent¶ { with preserving screw	1	1	1	1	...	...	...	...	1 spare to every 20-pr. and 2 spare to every 40-pr. and 7-in. gun, and 2 rings, copper, extra per gun.
	{ with preserving screw and obturating ring	...	...	...	...	1	...	...	...	
	{ with obturating ring	..	...	...	...	...	...	1	...	

Digitized by Google

Ordnance, R.B.L.	Plates	elevating	with pivot keep pin and 4 fixing screws	...	...	2**	...	...	...	...	...	2 pivots to every 10 or less number of plates of the same nature, and 1 keep pin to each plate, spare.
			counterweight carriage, Mark II, with bolt, washer, keep pin, and 5 fixing screws	...	1	...	...	...	...	...	...	1 keep pin per gun, spare.
		hinge, for carrier, with 2 fixing screws and hinge pin		...	...	...	...	...	...	...	1	1 spare to every 10 or less number of guns.
		trunnion		...	2	...	...	...	...	...	...	
	Saddles, with 6 fixing screws			1	1	1	1c	...	...	...	...	1 fixing screw per gun, spare.
	Screws	bracket, guide, preserving ...		...	...	...	...	...	8	...	...	1 breech screw, complete, spare, to every 10 or less number of guns; *a* also 1 tappet ring and 1 lever keep ring per gun, spare; *b* also 1 clip retaining lever, with axis pin and 2 flat springs, per gun, spare.
		breech	with lever, 2 keep pins, and tappet ring	...	...	...	...	...	...	1a	...	
			with lever, 2 keep pins, tappet ring, and indicator ring	1a	1a	1a	1a	1a	1a	...	...	
			with lever, 4 fixing screws, clip retaining lever, axis pin, and flat spring	...	...	...	...	...	...	...	1b	
		eyebolt, trunnion preserving ...		...	2	...	...	...	...	...	...	
		lanyard guide, preserving ...		1	...	...	...	1	...	...	...	For guns prepared for naval fittings only.
		pin, friction tube, preserving ...		1	...	...	...	...	...	...	...	
		plate, elevating, preserving ...		...	...	8	...	...	...	6	...	
		plate, elevating, counterweight carriage, preserving		...	5	...	...	...	...	...	...	
		set, tangent sight, with chain and eyebolt	left	...	...	...	...	...	...	1	...	
			right	...	...	...	...	...	...	1	...	
		sight	fore, preserving ...	...	...	...	...	...	...	...	2	
			reflecting, upper, preserving	...	3	...	...	...	...	...	...	
	Sockets, sight, tangent, with set screw ..			...	...	...	2	...	...	...	...	
	Studs, retaining breech block, with releasing lever, axis pin, and spiral spring			...	...	...	...	...	1	...	...	2 spiral springs per gun, spare.

* When mounted on garrison sliding carriage.
† For drill purposes a drill breech block is issued.
‡ 1 upper and 1 lower.
§ Iron, 1 set per gun.
‖ Copper, 2 per gun.

¶ The service vent piece is not to be used during drill, drill vent pieces being issued for that purpose.
** 1 left and 1 right.
c. 4 fixing screws only.

73 / 8 / 3695

Digitized by Google

Fittings and Component and Spare Parts for Land Service R.B.L. and S.B.B.L. Guns—*continued.*

Ordnance	Articles.	Ordnance, R.B.L. 7-in., 82 cwt, Land Service.	Fitted for Mounted Carriage, Mark II.	Fitted for Carr. Garr. Sliding, Medium, No. 1.	7-in., 12 cwt.	40-pr. 35 cwt.	40-pr. Side Closing.	20-pr., 16 cwt.	Ordnance S.B. B.L. 32-pr.	Remarks.
	SPECIAL IMPLEMENTS.									
Ordnance	R.B.L., Levers, vent piece { lifting	1	1	1	1	...	...	...	...	
	R.B.L., Levers, vent piece { releasing	1	1	1	1	...	...	...	...	
	S.B.B.L. { Levers, releasing breech screw, wood	...	...	...	...	...	...	...	1	1 per gun, spare.
	S.B.B.L. { Wrenches, breech mechanism A	...	...	...	...	...	...	...	1	
	S.B.B.L. { Wrenches, breech mechanism B	...	...	...	...	...	...	...	1	
	FITTINGS.									
	S.B.B.L. { Carriers, bronze, with cover, 4 fixing screws, lever retaining carrier, axis pin, flat spring, and 2 fixing screws, stop for breech screw, with spiral spring, and lever directing stop, with axis pin Cups, obturating, with spindle, spring, and 2 nuts	...	...	...	...	...	...	...	1	1 spare to every 10 or less number of guns, and 2 springs of each nature per gun.
		...	...	...	...	...	...	...	3*	

73
3
3095

Digitized by Google

1 / 3695	Ordnance, S.B.L.	Discs, cup, obturating Studs, catch, retaining carrier closed ..	...	...	...	...	...	...	...	3 / 1	1 spare to every 10 or less number of guns.
	Sights B.B.L.	fore, F	2	2	2	...	2	2	...		1 spare to every 10 or less number of sights of the same nature.
		fore	...	...	...	2†	...	...	...	...	1 spare to every 10 or less number of sights of the same nature.
		tangent	2	2	2	2	2	2	...	...	
		S.B.L.	...	...	...	...	...	...	...	1	

* 1 large and 2 small.

† Screw.

NOTE.—1 spare gun will be allowed, if available, for 20 pieces or less of the same nature in each district abroad.

Digitized by Google

B.L. CARRIAGES—COMPONENT

38407 Equip. 1538

Articles.	12-inch.	10-inch.				
		Disappearing.		Barbette.		
	Garrison.	Mark I.	Mark II.	Mark I. C.	Mark I. D.	Mark II.	Mark III.
Arcs, indicator, lever, cross shaft, raising valve with nuts	...	1	...	...	...	...	...
Axles, roller, steel ... with nut	...	...	...	...	...	...	...
,, ,, and split key	...	20	...	...	...	...	...
,, nuts	...	...	...	...	...	...	...
with nuts long	...	...	...	...	...	...	...
with nuts medium	...	...	...	...	...	...	...
with nuts short	...	...	...	...	...	...	...
with nuts and screws centre flat head	...	...	...	2	2	...	...
with nuts and screws centre round head	...	...	...	2	2	...	...
with nuts and screws front	...	...	...	4	4	...	...
with nuts and screws rear	...	...	...	2	2	...	...
with screws long	...	...	...	...	...	12	...
with screws short	...	...	...	...	...	2	...
with screws	14	...	...	...	...	...	10
Axles, truck, iron left	...	...	...	...	...	...	...
Axles, truck, iron right	...	...	...	...	...	...	...
Axles, truck, steel, with key	...	...	4	...	...	...	...
Axletrees, steel, 1st class B	...	...	...	...	...	...	...
Bar, portable, supporting cover plate, with pin and chain left	...	1	...	...	...	...	...
Bar, portable, supporting cover plate, with pin and chain right	...	1	...	...	...	...	...
Bearings, with bolts or screws, iron, axle, roller inside	14	...	...	...	...	14	10
Bearings, with bolts or screws, iron, axle, roller outside	14	...	...	...	...	14	10
Bearings, with bolts or screws, iron, traversing gear 2nd motion shaft (foot)	...	2	...	...	...	...	...
Bearings, with bolts or screws, iron, traversing gear 3rd ,, ,, lower	...	2	...	...	...	...	...
Bearings, with bolts or screws, iron, traversing gear 3rd ,, ,, upper	...	2	...	...	...	...	...
Bearings, with bolts or screws, metal, axle, roller inside	...	...	...	4	4	...	...
Bearings, with bolts or screws, metal, axle, roller outside	...	...	...	6	6	...	...
Bearings, with bolts or screws, metal, hydraulic buffer (band trunnion)	...	...	...	...	...	...	...
Bearings, with bolts or screws, metal, pinion, spindle elevating gear 1st motion	...	...	...	...	...	...	1
Bearings, with bolts or screws, metal, pinion, spindle elevating gear 2nd ,,	...	...	...	2	2	...	...
Bearings, with bolts or screws, metal, pinion, spindle gear indicator	...	...	...	1	1	...	...
Bearings, with bolts or screws, metal, pinion, spindle traversing inside	...	...	...	...	...	...	...
Bearings, with bolts or screws, metal, pinion, spindle traversing outside	...	...	...	...	...	...	...
Bearings, with bolts or screws, metal, spindle pump, running back	...	...	...	1	1	...	...
Bearings, with bolts or screws, metal, spindle valve, by pass, with screws	...	...	1	...	...	...	...
Bearings, with bolts or screws, metal, trunnion	2	...	...	2	2	...	...

¶ Mark I and Mark Ia carriages are the same in all respects as regards component parts, but Mark Ia is of slightly different dimensions to Mark I to suit the Mark I gun. The Mark I Gun is fitted with elevating plates instead of an elevating band.

a denotes the parts which differ in dimensions, and in demanding these parts the mark of the carriage must be quoted to prevent mistakes.

Digitized by Google

AND SPARE PARTS FOR.

9·2-inch.				8-inch.	6-inch Disappearing.				6-inch.		5-inch.	4-inch.	Proportion of Spare.
Disappearing.		Barbette.		Barbette.	Marks IV & VI guns.		Mark V gun.						
Mark I.	Mark II.	Mark I. and IA.¶	Mark II.	Mark I.	Mark II. and II.*	Mark IV.	Mark I.	Mark III.	Vavasseur Central Pivot.	Barbette Central Pivot.	Travelling, 6-ft. parapet.	Travelling, 6-ft. parapet.	Fort or Battery. Per 10 guns, or less No. of each nature.
1	...	...	...	...	1	1	...	1	...	...	...	...	...
...	...	...	...	...	16	...	...	...	...	...	...	...	...
18	...	...	...	...	...	16	...	16	...	...	...	...	...
...	...	...	...	8	...	...	...	...	...	...	...	...	1
...	...	...	...	...	...	...	...	...	...	2	...	...	...
...	...	...	...	...	...	...	...	...	...	2	...	...	...
...	...	...	...	...	...	...	...	...	...	4	...	...	...
...	...	2	...	...	...	...	...	...	...	...	...	...	1
...	...	2	...	...	...	...	...	...	...	...	...	...	1
...	...	4	...	...	...	...	...	...	...	...	...	...	1
...	...	2	...	...	...	...	...	...	...	...	...	...	1
...	...	...	12	...	...	...	...	...	...	...	...	...	1
...	...	...	2	...	...	...	...	...	...	...	...	...	1
...	...	...	...	...	...	...	...	...	...	...	...	...	1§
...	...	...	...	...	...	...	2	...	...	...	...	...	...
...	...	...	...	...	...	...	2	...	...	...	...	...	...
...	4	...	...	...	...	...	...	...	...	...	...	...	...
...	...	...	...	...	...	...	...	...	...	...	1	1	...
...	...	...	...	...	...	...	...	...	...	...	...	...	...
...	...	...	...	...	...	...	...	...	...	...	...	...	...
...	...	...	14	...	...	...	...	...	...	...	...	...	...
...	...	...	14	...	...	...	...	...	...	...	...	...	...
2	...	...	...	...	...	...	...	...	...	...	...	...	...
2	...	...	...	...	...	...	...	...	...	...	...	...	...
2	...	...	...	...	...	...	...	...	...	...	...	...	...
...	...	4	...	8	...	...	...	...	...	4	...	...	...
...	...	6	...	8	...	...	...	...	...	6	...	...	...
...	...	...	...	...	...	...	...	...	...	...	2	2	...
...	...	...	...	...	...	...	...	...	...	...	...	...	...
...	...	...	...	1	...	..	...	...	...	...	...	...	...
...	...	2	...	1	...	...	...	...	...	...	...	...	...
...	...	1	...	...	...	...	...	...	...	...	...	...	...
...	...	...	...	...	...	...	4	...	...	...	...	...	...
...	...	...	...	...	...	...	4	...	...	...	...	...	...
...	...	1	...	...	...	...	...	...	...	...	...	...	...
...	1	...	...	...	...	...	...	...	...	...	...	...	...
...	...	a2	...	2‡	...	...	...	...	...	2	...	...	...

‡ 1 left and 1 right.
§ 2 for the 10-in. Mark III.

Digitized by Google

B.L. Carriages—Component

Articles.	12-inch.	10-inch.				
		Disappearing.	Barbette.			
			Mark I.			
	Garrison.	Mark I.	Mark II.	C.	D.	Mark II.	Mark III.
Bearings, with bolts or screws — shaft, cross — pump lowering — 1st motion — left	...	...	...	...	...	...	...
1st motion — right	...	1	...	...	...	...	...
2nd motion — left	...	1	...	...	...	...	...
2nd motion — right	...	1	...	...	...	...	...
left	...	...	...	...	...	...	...
right	...	...	...	...	...	...	...
main, with cap and bolts	...	...	2	...	...	...	...
raising valve — left	...	1	...	...	...	...	...
raising valve — right	...	1	...	...	...	...	...
shaft, elevating — 1st motion — left	...	...	...	...	...	...	...
1st motion — right	...	1	...	...	...	...	...
1st motion — and shaft cross raising valse	...	...	...	...	...	...	...
2nd motion — left	...	1	...	...	...	...	...
2nd motion — right	...	1	...	...	...	...	...
steel — axletree	...	...	...	...	...	...	...
steel — trunnion	...	...	...	...	...	...	2
Blocks, wood, housing	...	...	...	...	...	...	...
Bolts — connecting piston rod, steel, with nut	...	...	2	2	...	...	...
Bolts — with nuts assorted ... sets	...	...	1	...	...	...	...
Box, guard, with bearings, 1st and 2nd motion shafts, gear traversing	...	2	...	...	...	...	...
Brackets, with bolts or screws — buffer — left	...	...	...	...	...	...	...
buffer — right	...	...	...	...	...	...	...
carrying gear, traversing, with cap	...	...	...	...	...	...	...
clip, elevator	...	2	...	...	...	...	...
elevating, rear	...	...	...	...	...	...	...
elevator, joint pin — left	...	1	...	...	...	...	...
elevator, joint pin — right	...	1	...	...	...	...	...
hydraulic buffer — front	...	...	...	...	...	...	...
hydraulic buffer — rear	...	...	...	...	...	...	...
lever, plunger, pump lowering	...	...	...	...	...	...	...
loading gear — roller guide	...	...	1	...	...	...	...
loading gear — shaft — winch handle	...	...	2	...	...	...	...
loading gear — shaft — wheel sprocket	...	...	2	...	...	...	...
pans, drip, hydraulic buffer — left	...	1	...	...	...	...	...
pans, drip, hydraulic buffer — right	...	1	...	...	...	...	...

¶ *See* note ¶ page 476.

Digitized by Google

and Spare Parts for—*continued.*

9·2-inch.				8-inch.	6-inch Disappearing.				6-inch.		5-inch.	4-inch.	Proportion of Spare.
Disappearing.		Barbette.		Barbette.	Marks IV & VI guns.		Mark V gun.						
Mark I.	Mark II.	Mark I. and I.A. ¶	Mark II.	Mark I.	Mark II and II.*	Mark IV.	Mark I.	Mark III.	Vavasseur Central Pivot.	Barbette Central Pivot.	Travelling, 6-ft. parapet.	Travelling, 6-ft. parapet.	Fort or Battery. Per 10 guns, or less No. of each nature.
...	...	...	...	...	...	2	...	2	...	...	...	...	...
1	...	...	...	...	...	...	...	...	...	...	...	...	...
...	...	...	...	...	...	...	...	...	...	...	...	...	...
...	...	...	...	...	...	2	...	2	...	...	...	...	...
1	...	...	...	...	...	...	...	...	...	...	...	...	...
1	...	...	...	...	...	...	...	...	...	...	...	...	...
...	...	...	...	...	1	...	...	...	...	...	...	...	...
...	...	...	...	...	1	...	...	...	...	...	...	...	...
...	2	...	...	...	...	...	...	...	...	...	...	...	...
1	...	...	...	...	1	1	...	1	...	...	...	...	...
1	...	...	...	...	1	...	...	...	...	...	...	...	...
...	...	...	...	...	1	...	1	...	...	...	...	...	...
1	...	...	...	...	...	...	...	...	...	...	...	...	...
1	...	...	...	...	...	...	...	...	...	...	...	...	...
...	...	...	...	...	...	1	...	1	...	...	...	...	...
...	2	...	...	...	...	...	...	...	...	...	...	...	...
1	...	...	...	...	...	...	...	...	...	...	...	...	...
1	...	...	...	...	...	...	...	...	...	...	...	...	...
...	...	...	...	...	...	...	...	...	...	...	2‡	2‡	...
...	...	...	...	...	...	...	...	...	...	...	...	...	...
...	...	...	...	...	...	...	1	...	...	...	...	...	...
...	...	1	...	...	...	...	...	...	...	...	...	...	...
...	1	...	...	...	...	...	...	...	...	...	...	...	1†
2	...	...	...	...	...	...	...	...	...	...	...	...	...
...	...	...	...	...	...	...	...	...	...	1	...	...	...
...	...	...	...	...	...	...	...	...	...	1	...	...	...
...	...	...	...	...	2	2	...	2	...	...	...	...	...
2	...	...	...	...	...	...	...	...	...	...	...	...	...
...	...	...	...	...	...	...	...	...	1	...	...	...	...
1	...	...	...	...	1	1	1	1	...	...	...	...	...
1	...	...	...	...	1	1	1	1	...	...	...	...	...
...	...	...	...	1	...	...	...	...	...	1	...	...	...
...	...	...	...	1	...	...	...	...	...	1	...	...	...
...	...	...	...	...	...	...	1	...	...	...	...	...	...
...	1	...	...	...	...	...	...	...	...	...	...	...	...
...	2	...	...	...	...	...	...	...	...	...	...	...	...
...	2	...	...	...	...	...	...	...	...	...	...	...	...
...	...	...	...	...	...	...	...	...	...	...	...	...	...
...	...	...	...	...	...	...	...	...	...	...	...	...	...

† 1 set for 9·2-in. and 10-in. E. and A (Mark II).
‡ 1 left and 1 right.

Digitized by Google

B.L. Carriages—Component

Articles.	12-inch.	10-inch.					
		Disappearing.	Barbette.				
	Garrison.	Mark I.	Mark II.	Mark I. C.	Mark I. D.	Mark II.	Mark III.
Brackets with bolts or screws — pointer — arc traversing — left	...	...	1	...	...	...	...
pointer — arc traversing — right	...	...	1	...	...	...	...
pointer — steel	...	...	...	...	...	...	...
securing, pump, running back	...	...	...	...	...	...	2
shaft, rear of slide	...	...	...	...	...	...	...
shield, pillars	...	...	...	...	...	...	...
shield, pillars — lower — front — left	...	...	...	...	...	...	...
shield, pillars — lower — front — right	...	...	...	...	...	...	...
shield, pillars — lower — rear — left	...	...	...	...	...	...	...
shield, pillars — lower — rear — right	...	...	...	...	...	...	...
shield, pillars — upper — front — left	...	...	...	...	...	...	...
shield, pillars — upper — front — right	...	...	...	...	...	...	...
shield, pillars — upper — rear — left	...	...	...	...	...	...	...
shield, pillars — upper — rear — right	...	...	...	...	...	...	...
sliding gear, elevating	...	...	...	...	...	...	1
spindle — second and third motion — left	...	...	2	...	...	...	...
spindle — second and third motion — right	...	...	2	...	...	...	...
spindle — pump, running back ...	...	...	...	1	1	...	...
spindle — worm, elevating ...	...	...	...	...	...	...	...
spindle — worm, elevating — bottom	...	...	...	...	...	...	...
spindle — worm, elevating — top ...	...	...	...	...	...	...	...
traversing gear, handle crank — inside	...	...	2	...	...	...	...
traversing gear, handle crank — outside	...	...	2	...	...	...	...
trunnions, recoil cylinder	...	2	...	...	...	...	...
housing, gun — muzzle, with rivets	...	...	...	...	...	...	...
housing, gun — breech, with bolts	...	...	...	...	...	...	...
Buffers 40 disc springs, blocks parting and striking, and 2 spindles, with nuts and pins	...	2	...	...	...	...	...
36 disc springs, blocks parting and striking, and 2 spindles, with nuts and pins	...	...	...	...	...	...	...
consisting of one bracket, steel — 24 disc springs, blocks parting and striking, and 2 spindles, with nuts and pins	...	...	...	...	...	...	...
28 disc springs, blocks parting and striking, 2 spindles with nuts and pins, plates, holding down elevator, with pin, padlock and chain	...	...	...	...	...	...	...
28 disc springs, blocks parting and striking, and 2 spindles, with nuts	...	...	...	...	...	...	...
consisting of 2 caps, 8 indiarubber pads, 6 plates, 2 spindles, with nuts and keys	...	...	2	...	...	...	...
hydraulic, complete	...	...	...	2	2	...	2

¶ *See* note ¶ page 476.

Digitized by Google

and Spare Parts for—*continued.*

9·2-inch.				8-inch.	6-inch Disappearing.				6-inch.		5-inch.	4-inch.	Proportion of Spare.
Disappearing.		Barbette.		Barbette.	Marks IV & VI guns.		Mark V gun.						
Mark I.	Mark II.	Mark I. and IA.¶	Mark II.	Mark I.	Mark II. and II*.	Mark IV.	Mark I.	Mark III.	Vavasseur Central Pivot.	Barbette Central Pivot.	Travelling, 6-ft. parapet.	Travelling, 6-ft. parapet.	For or Battery. Per 10 guns, or less No. of each nature.
...	...	...	...	...	...	...	...	..	...	...	...	...	...
...	...	...	...	...	...	...	...	...	...	...	...	...	...
..	...	...	...	...	...	...	...	...	1	...	...	...	...
...	...	...	...	...	...	...	...	...	...	...	...	...	...
...	...	...	...	...	...	...	...	...	1	...	...	...	...
...	...	...	...	...	...	4	...	4	...	...	...	...	...
...	...	...	...	...	1	...	...	...	...	...	...	...	...
...	...	...	...	...	1	...	...	...	...	...	...	...	...
...	...	...	...	...	1	...	...	...	...	...	...	...	...
...	...	...	...	...	1	...	...	...	...	...	...	...	...
...	...	...	...	...	1	...	...	...	...	...	...	...	...
...	...	...	...	...	1	...	...	...	...	...	...	...	...
...	...	...	...	...	1	...	...	...	...	...	...	...	...
...	...	...	...	...	1	...	...	...	...	...	...	...	...
...	2	...	...	...	...	...	...	...	...	...	...	...	...
...	2	...	...	...	...	...	...	...	...	...	...	...	...
...	...	1	...	...	...	...	...	...	...	...	...	...	...
...	...	...	...	...	...	...	...	...	1	...	...	...	...
...	...	...	...	...	...	...	...	...	...	...	1	1	...
...	...	...	...	...	...	...	...	...	...	...	1	1	...
...	2	...	...	...	...	...	...	...	...	...	...	...	...
...	2	...	...	...	...	...	...	...	...	...	...	...	...
2	...	...	...	...	2	2	2	2	...	...	...	...	...
...	...	...	...	...	...	...	...	...	...	...	1	1	...
...	...	...	...	...	...	...	...	...	...	...	1	...	...
...	...	...	...	...	...	...	...	...	...	...	...	...	...
2	...	...	...	...	...	...	...	...	...	...	...	...	...
...	...	...	...	...	2	...	...	...	...	...	...	...	...
...	...	...	...	...	...	2	...	2	...	...	...	...	...
...	...	...	...	...	...	...	2	...	...	...	...	...	...
...	2	...	...	...	...	...	...	...	...	...	...	...	...
...	...	1	...	1	...	...	...	...	...	1	1	1	...

Digitized by Google

B.L. Carriages—Component

Articles.	12-inch.	10-inch.					
		Disappearing.		Barbette.			
	Garrison.	Mark I.	Mark II.	Mark I.		Mark II.	Mark III.
				C.	D.		
Caps, hydraulic buffer ... ... iron... front	2	...	...	...	...	...	...
iron... rear	2	...	...	...	...	...	...
metal, rear	...	...	...	2	2	...	...
steel left	...	...	...	...	...	...	...
steel right	...	...	...	...	...	...	...
Capsquares ... metal	...	...	...	...	...	...	...
Capsquares ... steel	2	...	...	2	2	...	...
Carriages, body, without fittings	1	1	1	1	1	1	1
Chains drag shoe, No. 1	...	...	...	...	...	...	...
Chains securing hydraulic buffer, with loop	...	...	...	...	...	...	...
Chains keep, with shackle and bolt	...	...	...	...	...	...	...
Chains securing gun, housing, position with coupling and hooks	...	...	...	...	...	...	...
Clips, iron elevator with nut, screw, pin, and split key	...	...	...	...	...	...	...
Clips, iron elevator with set screw, pin, collar, and key	...	2‡	...	...	...	...	...
Clips, iron with nuts and screws	...	...	2	...	...	...	...
Cotters, shield pillars with eye ...	...	...	...	...	...	...	...
Cotters, shield pillars plain	...	8	...	...	...	...	...
Cross heads, rod, piston, steel, with split key ...	...	...	...	2	2	...	...
Cups, leather, packing piston rod	...	...	...	...	...	...	...
Derrick, pump, running back	...	...	...	...	...	...	1
Elevators, parts of, capsquares left	...	1	1	...	...	...	...
Elevators, parts of, capsquares right	...	1	1	...	...	...	...
Elevators, parts of, elevators, without fittings ...	...	1	1	...	...	...	...
Elevators, parts of, keys, No. 74	...	..	...	...	...	...	...
Elevators, parts of, capsquare, ,, 75	...	4	...	...	...	...	...
Elevators, parts of, with chain ,, 76	...	...	...	...	...	...	...
Elevators, parts of, screws, capsquare iron	...	...	...	...	...	...	...
Elevators, parts of, screws, capsquare metal	...	...	...	...	...	...	...
Flanges, truck, with bolts	...	...	8	...	...	...	...
Guards, gun muzzle, on shield, with screws ...	...	1	...	...	...	...	...
Glands, hydraulic buffer, metal ... ... inside	...	...	...	...	...	...	...
Glands, hydraulic buffer, metal ... ... outside	...	...	...	...	...	...	...
Glands, hydraulic buffer, metal ... ... inside	2	...	...	2	2	2	2
Glands, hydraulic buffer, metal ... ... outside	2	...	...	2	2	2	2
Glands, hydraulic buffer, metal ... ... filling hole	2	...	...	...	...	...	...
Guides arc, elevating metal, with screws	...	...	...	1	1	...	...
Guides arc, elevating with bolts and caps —	...	...	2	...	...	...	...
Guides arc, elevating with bolts and caps left ...	...	1	...	...	...	...	...
Guides arc, elevating with bolts and caps right ...	...	1	...	...	...	...	...

¶a *See* note ¶ page 476. † For 4-in. and 5-in. only.
§ For 4-in. and 5-in. and 8-in barbette only.

Digitized by Google

and Spare Parts for—*continued.*

9·2-inch.				8-inch.	6-inch Disappearing.				6-inch.		5-inch.	4-inch.	Proportion of Spare.
Disappearing.		Barbette.		Barbette.	Marks IV.&VI. guns.		Mark V. gun.		Vavasseur Central Pivot.	Barbette Central Pivot.	Travelling, 6-ft. parapet.	Travelling, 6-ft. parapet.	Fort or Battery. Per 10 guns, or less No. of each nature.
Mark I.	Mark II.	Mark I. and IA.¶	Mark II.	Mark I.	Mark II. and II.*	Mark IV.	Mark I.	Mark III.					
...	...	...	...	...	...	...	...	...	...	...	1	1	...
...	...	...	...	...	...	...	...	...	...	...	1	1	...
...	...	1	...	1	...	...	...	...	...	1	...	...	...
...	...	...	...	...	...	...	...	...	1	...	...	...	...
...	...	...	...	...	...	...	...	...	1	...	...	...	...
...	...	...	...	2	...	...	...	...	2	...	...	...	2‡
...	...	*a*2	...	...	...	...	...	...	...	2	2	2	1†
1	1	*a*1	1	1	1	1	1	1	1	1	1	1	...
...	...	...	...	...	...	...	...	...	...	...	1	1	...
...	...	...	...	...	...	...	...	...	...	...	1	1	...
...	...	...	...	...	...	...	2	...	...	...	...	...	...
...	...	...	...	...	...	...	1	...	...	...	...	...	...
...	...	...	...	...	2‡	...	...	...	...	...	...	...	...
2‡	...	...	...	...	...	...	...	...	...	...	...	...	...
...	2	...	...	...	...	...	...	...	...	...	...	...	...
...	...	...	...	...	...	4	...	4	...	...	...	...	...
8	...	...	...	...	4	4	...	4	...	...	...	...	...
...	...	1	...	...	...	...	...	...	...	...	...	...	...
...	...	...	...	...	...	...	...	...	2	...	...	...	...
...	...	...	...	...	...	...	...	...	...	...	...	...	...
1	1	...	...	...	1	1	1	1	...	...	...	...	...
1	1	...	...	...	1	1	1	1	...	...	...	...	...
1	1	...	...	...	1	1	1	1	...	...	...	...	...
...	...	...	...	...	...	2	...	2	...	...	...	...	...
...	...	...	...	...	...	...	...	...	...	...	...	...	...
4	...	...	...	...	...	...	...	...	...	...	...	...	...
...	...	...	...	...	3	...	3	...	...	...	...	...	...
...	...	...	...	...	1	...	1	...	...	...	...	...	...
...	8	...	...	...	...	...	...	...	...	...	...	...	...
1	...	...	...	...	1	1	...	1	...	...	...	...	...
...	...	1	...	1	...	...	...	...	...	1	1	1	1§
...	...	1	...	1	...	...	...	...	...	1	1	1	1§
...	...	...	2	...	...	...	...	...	2	...	...	...	...
...	...	...	2	...	...	...	...	...	2	...	...	...	...
...	...	...	...	...	...	...	...	...	...	...	...	...	...
...	2	*a*1	...	...	...	...	...	...	...	...	1	1	...
...	2	...	...	...	...	...	...	...	...	...	...	...	...
1	...	...	...	...	1	1	1	1	...	...	...	...	...
1	...	...	...	...	1	1	1	1	...	...	...	...	...

‡ 1 right and 1 left.

Digitized by Google

B.L. Carriages—Component

Articles.	12-inch.	10-inch.					
		Disappearing.		Barbette.			
	Garrison.	Mark I.	Mark II.	Mark I. C.	Mark I. D.	Mark II.	Mark III.
Hooks drag shoe centre	...	...	...	...	...	...	...
Hooks drag shoe front	...	...	...	...	...	...	...
Hooks drag shoe rear	...	...	...	...	...	..	...
Hooks stowing, lever, pump, lowering	...	...	...	...	...	...	...
Keys capsquare, with chain No. 70	4	...	...	...	...	...	...
Keys capsquare, with chain ,, 71	...	...	...	...	...	..	...
Keys capsquare, with chain ,, 72	...	...	...	2	2	..	...
Keys capsquare, with chain ,, 73	...	...	...	...	...	...	...
Keys capsquare, with chain ,, 137	...	...	...	...	...	...	...
Keys capsquare, with chain ,, 250	...	...	...	...	...	...	...
Keys capsquare, with chain ,, 251	...	...	...	...	...	...	...
Keys capsquare, with chain ,, 252	...	...	...	..	...	...	...
Keys capsquare, with chain ,, 253	...	...	...	...	...	...	...
Keys securing piston rod ... left	...	...	...	...	...	.	...
Keys securing piston rod ... right	...	...	...	...	...	...	...
Keys split flat ... bearing hydraulic buffer	...	...	...	...	...	...	...
Keys split flat ... pin stay connecting hydraulic buffer	...	...	...	...	...	...	...
Keys split round L head, rod piston hydraulic buffer, 5-in. × 0·6-in.	...	...	...	...	...	...	...
Keys split round loop head axle roller, 0·3-in. × 3·375-in.	...	...	...	...	...	...	...
Keys wrought-iron, with chain, securing pump, running back	...	...	...	...	...	...	2
Levers, iron ... adjusting rod, piston ... left	1	...	...	...	...	...	...
Levers, iron ... adjusting rod, piston ... right	1	...	...	...	...	...	...
Levers, iron ... pump, running back	...	...	...	1	1	...	...
Liners ... manganese bronze, carriage	...	...	...	...	...	...	...
Liners ... steel, cylinder	...	...	...	...	...	...	...
Loops ... iron... with collar and nut	...	...	...	...	...	4	...
Loops ... iron... with rivets	...	...	...	...	...	...	...
Loops ... iron... with nuts	4	...	...	...	...	...	...
Loops ... steel —	...	...	...	...	...	...	...
Loops ... steel bracket front	...	...	...	...	...	...	2
Loops ... steel bracket rear	...	...	...	...	...	...	2
Loops ... steel with nuts	...	...	...	2	2	...	...
steel, lifting shield	...	2	...	...	...	...	...
steel, lifting capsquares and cylinder cover	...	2	...	...	...	...	...
Ordnance, B.L., plates, elevating	...	...	...	...	...	...	...
Packings, hydraulic buffer length of 12 inches	...	...	...	...	...	...	...
Packings, hydraulic buffer ,, ,, 42 ,,	...	...	...	...	...	...	...
Packings, hydraulic buffer ,, ,, 56 ,,	2	...	...	...	...	...	...
Packings, hydraulic buffer ,, ,, 64 ,,	...	...	...	2	2	...	...
Packings, hydraulic buffer ,, ,, 84 ,,	...	...	...	...	...	...	...
Packings, hydraulic buffer ,, ,, 8 feet	...	...	...	...	...	2	2

57 Australia 249

¶a *See* note ¶ page 476.

Digitized by Google

and Spare Parts for—*continued.*

9·2-inch.				8-inch.	6-inch. Disappearing.				6-inch.		5-inch.	4-inch.	Proportion of Spare.
Disappearing.		Barbette.		Barbette.	Mark IV. & VI. guns.		Mark V. gun.						
Mark I.	Mark II.	Mark I. and IA.¶	Mark II.	Mark I.	Mark II. and II.*	Mark IV.	Mark I.	Mark III.	Vavasseur Central Pivot.	Barbette Central Pivot.	Travelling, 6-ft. parapet.	Travelling, 6-ft. parapet.	For or Battery. Per 10 guns, or less No. of each nature.
...	...		...	...	...	...	...	...	...	...	1	1	...
...	...	...	...	...	...	...	...	...	...	...	2	2	...
...	...	...	...	...	2	2	...	2	...	...	1	1	...
...	...	...	...	...	...	...	...	...	...	...	...	...	2
...	...	2	...	...	...	...	...	...	...	2	...	...	1
...	...	...	...	4	...	...	...	...	...	...	...	...	1
...	...	...	...	...	...	...	...	...	2	...	...	...	2
...	...	...	...	...	...	...	...	...	...	...	2	...	...
...	...	...	...	...	...	...	...	...	...	...	2	2	1
...	...	...	...	...	...	...	...	...	1	...	...	2	1
...	...	...	...	...	...	...	...	...	1	...	...	...	1
...	...	...	...	...	...	...	...	...	...	...	2	2	...
...	...	...	...	...	...	...	...	...	...	...	...	...	6
...	...	...	...	...	...	...	...	...	...	8	...	...	12
...	...	...	...	...	...	...	...	...	...	...	...	...	...
...	...	...	...	...	...	...	...	...	...	...	...	...	...
...	...	1	...	...	...	...	...	...	2	...	...	...	...
...	...	...	...	...	...	...	...	...	2	...	...	...	...
...	...	...	4	...	...	...	...	...	...	...	...	...	...
...	...	...	...	2	...	...	...	...	...	2	2	2	...
...	...	...	...	...	...	...	...	...	2	1	...	...	...
...	...	...	...	...	...	...	...	...	...	...	...	...	...
...	...	2	...	...	...	...	...	...	...	...	...	...	...
2	...	...	...	...	...	...	...	...	...	...	...	...	...
...	...	...	...	2	...	...	...	...	...	4	...	...	4†
...	...	...	...	...	...	...	...	...	...	...	1	1	1†
...	...	...	...	...	...	...	...	...	...	...	...	...	2†
...	...	1	...	...	...	...	...	...	...	...	...	...	2†
...	...	...	2	...	...	...	...	...	1	...	...	...	2†
...	...	...	...	...	...	...	...	...	...	...	...	...	2†

† Per carriage.

Digitized by Google

B.L. Carriages—Component

Articles.	12-inch.	10-inch.				
		Disappearing.		Barbette.		
	Garrison.	Mark I.	Mark II.	Mark I. C.	Mark I. D.	Mark II.	Mark III.
Packings, hydraulic buffer (set of 8) consisting of—							
Washers, leathers (set of 6) ... ... sets	...	...	...	...	...	...	1
Rings, leather, L section (set of 2)	...	...	...	...	...	...	1
Packings, pipe, connecting hydraulic buffer (set of 4), consisting of—							
Washers, leather (set of 4) ... ... sets	...	...	...	...	...	...	1
Pans, drip, hydraulic buffer, No. 1	2	...	...	...	...	...	...
Pillars, shield ... inside ... front left	...	1	...	...	...	...	...
Pillars, shield ... inside ... front right	...	1	...	...	...	...	...
Pillars, shield ... inside ... rear left	...	1	...	...	...	...	...
Pillars, shield ... inside ... rear right	...	1	...	...	...	...	...
Pillars, shield ... outside ... front left	...	1	...	...	...	...	...
Pillars, shield ... outside ... front right	...	1	...	...	...	...	...
Pillars, shield ... outside ... rear left	...	1	...	...	...	...	...
Pillars, shield ... outside ... rear right	...	1	...	...	...	...	...
Pillars, shield ... with cotter	...	...	...	...	...	...	...
Pillars, shield ... ,, screw	...	...	...	...	...	...	...
Pins connecting rod, steel, with collar and nut ...	1	...	...	...	...	...	...
Pins joint ... elevator, with collars and keys ...	...	...	...	...	...	...	...
Pins joint ... with plate and screws	...	2	...	...	...	...	...
Pins lever, adjusting, steel, with nuts	2	...	...	...	...	...	...
Pins linch, 1st class, steel	...	...	...	...	...	...	...
Pins stay, connecting, hydraulic buffer...	...	...	...	...	...	...	...
Pins step, side, with split key	...	...	...	...	...	...	...
Pins taper, shaft, gear, large end ·432 ... 3·25 in.	...	...	...	...	...	...	...
Pins elevating, steel small end ·36 in. long							
Pipes, connecting, hydraulic buffer...	1	...	...	1	1	1	1
Pistons P.B.	...	...	...	...	...	...	2
Pistons with rod valve and nuts left	1	...	...	1	1	1	...
Pistons with rod valve and nuts right	1	...	...	1	1	1	...
Plates arrow, metal, with screws, elevate and depress right	...	2	...	...	...	...	...
Plates arrow, metal, with screws, elevate and depress left	...	2	...	...	...	...	...
Plates arrow, metal, with screws, trail right	...	2	...	...	...	...	...
Plates arrow, metal, with screws, trail left	...	2	...	...	...	...	...
Plates arrow, metal, with screws, elevator ... ... pairs	...	1	...	...	...	...	...
Plates steel, with bolts ... ... ,,	...	8	...	...	...	...	...
Plates clip front steel with bolts and bushes ... ... pairs	...	...	...	...	...	...	...
Plates clip front steel with bolts... ... ... ,,	...	...	...	...	...	1	...
Plates clip front steel with lubricating screws ,, pairs	...	...	...	2	2	...	...
Plates iron, with bolts	4	...	...	...	...	...	4
Plates rear, steel ... ... pairs	...	...	...	1	1	...	...

57
Australia.
249

¶ *See* note ¶page 476.
† Per carriage.
‡ For 6-inch barbette only.

Digitized by Google

and Spare Parts for—*continued.*

9·2-inch.				8-inch.	6-inch Disappearing.				6-inch.		5-inch.	4-inch.	Proportion of Spare.
Disappearing.		Barbette.		Barbette.	Mark IV. & VI. guns.		Mark V. gun.		Vavasseur Central Pivot.	Barbette Central Pivot.	Travelling, 6-ft. parapet.	Travelling, 6-ft. parapet.	Port or battery. Per 10 guns, or less No. of each nature.
Mark I.	Mark II.	Mark I. and IA.¶	Mark II.	Mark I.	Mark II. and II*.	Mark IV.	Mark I.	Mark III.					
...	...	...	...	...	...	...	...	...	...	...	...	...	2†
...	...	...	...	...	...	...	...	...	...	...	...	...	2†
...	...	...	...	...	...	...	...	...	...	...	...	...	1
...	...	...	...	...	...	...	...	...	...	...	...	...	...
1	...	...	...	...	...	1	...	1	...	...	...	...	...
1	...	...	...	...	...	1	...	1	...	...	...	...	...
1	...	...	...	...	...	1	...	1	...	...	...	...	...
1	...	...	...	...	...	1	...	1	...	...	...	...	...
1	...	...	...	...	...	1	...	1	...	...	...	...	...
1	...	...	...	...	...	1	...	1	...	...	...	...	...
1	...	...	...	...	...	1	...	1	...	...	...	...	...
...	...	...	...	...	4	...	4	...	...	...	...	...	...
...	...	...	...	...	4	...	4	...	...	...	...	...	...
...	...	...	...	...	...	...	...	...	...	...	...	...	...
...	...	...	...	...	2	2	2	2	...	...	...	...	...
2	...	...	...	...	...	...	...	...	...	...	...	...	...
...	...	...	...	...	...	...	...	...	...	...	2	2	1†
...	...	...	...	...	...	...	...	...	...	...	2	2	...
...	...	...	...	...	...	...	...	...	...	...	4	4	...
...	...	...	...	...	...	...	...	...	...	...	...	...	6‡
...	...	...	1	...	...	...	...	...	1	...	...	...	1§
...	...	...	...	...	...	...	...	...	...	...	...	...	2
...	...	1	...	1	...	...	...	...	...	1	...	...	...
...	...	...	1	...	...	...	...	...	1	...	...	...	1‖
...	...	...	1	...	...	...	...	...	1	...	...	...	1‖
2	...	...	...	...	2	2	2	2	...	...	...	...	...
2	...	...	...	...	2	2	2	2	...	...	...	...	...
2	...	...	...	...	2	2	2	2	...	...	...	...	...
2	...	...	...	...	2	2	2	2	...	...	...	...	...
1	...	...	...	...	1	1	1	1	...	...	...	...	...
8	...	...	...	...	4**	...	...	...	...	...	...	...	2
...	...	...	...	...	...	...	...	...	...	...	...	...	1
...	...	...	1	...	...	...	...	...	...	...	...	...	...
...	...	2	...	...	...	...	...	...	...	...	...	...	1
...	...	...	...	1	1††	...	...	...	...	2	...	...	1
...	...	...	...	...	...	...	1	...	...	...	...	...	4§§
...	...	1	...	1	1††	...	1	...	...	1	...	...	1

§ 1 each for 12-in. garrison, 9·2-in. barbette II, 10-in. barbette II.
‖ For 12-in. garrison only.
** Mark II only.
§§ For 10-in. barbette, mark III.
†† Mark II* only.

Digitized by Google

B.L. Carriages—Component

Articles.	12-inch.	10-inch.					
		Disappearing.		Barbette.			
	Garrison.	Mark I.	Mark II.	Mark I.		Mark II.	Mark III.
				C.	D.		
Plates: clip, steel, with bolts ... ... front	...	...	...	...	...	...	...
Plates: clip, steel, with bolts ... ... rear	...	...	...	...	...	...	...
Plates: connecting, piston rod, iron	...	1	...	...	...	...	...
Plates: covershield, steel† No. I	...	1	...	...	...	...	...
Plates: covershield, steel† ,, II	...	1	...	...	...	...	...
Plates: covershield, steel† ,, III	...	1	...	...	...	...	...
Plates: covershield, steel† ,, IV	...	1	...	...	...	...	...
Plates: covershield, steel† ,, V	...	1	...	...	...	...	...
Plates: covershield, steel† ,, VI	...	1	...	...	...	...	...
Plates: covershield, steel† ,, VII	...	1	...	...	...	...	...
Plates: covershield, steel† ,, VIII	...	1	...	...	...	...	...
Plates: covershield, steel† ,, IX	...	1	...	...	...	...	...
Plates: covershield, steel† ,, X	...	1	...	...	...	...	...
Plates: covershield, steel† ,, XI	...	1	...	...	...	...	...
Plates: covershield, steel† ,, XII	...	1	...	...	...	...	...
Plates: covershield, steel† ,, XIII	...	1	...	...	...	...	...
Plates: covershield, steel† ,, XIV	...	1	...	...	...	...	...
Plates: covershield, steel† ,, XV	...	1	...	...	...	...	...
Plates: covershield, steel† ,, XVI	...	1	...	...	...	...	...
Plates: covershield, steel† ,, XVII	...	1	...	...	...	...	...
Plates: cover, box, guard, gear traversing, with screws	...	2	...	...	...	...	...
Plates: foot, left, inner front	...	...	...	...	...	...	...
Plates: foot, left, inner rear	...	...	...	...	...	...	...
Plates: foot, left, outer front	...	...	...	...	...	...	...
Plates: foot, left, outer rear	...	...	...	...	...	...	...
Plates: foot, left, front	...	1	...	...	...	...	...
Plates: foot, left, rear	...	1	...	...	...	...	...
Plates: foot, right, inner	...	...	...	...	...	...	...
Plates: foot, right, outer front	...	...	...	...	...	...	...
Plates: foot, right, outer rear	...	...	...	...	...	...	...
Plates: foot, right, front	...	1	...	...	...	...	...
Plates: foot, right, rear	...	1	...	...	...	...	...
Plates: manhole	...	2	...	...	...	...	...
indicator, metal, with screws: rod, connecting, levers, adjusting	1	...	...	...	...	...	...
indicator, metal, with screws: pointer, adjusting, piston rod	2	...	...	...	...	...	...
inscription, metal, with screws	1	1	1	1	1	1	1
instruction, metal, with screws ... cylinder, recoil	...	1	...	...	...	...	...
instruction, metal, with screws ... pump lowering	...	1	...	...	...	...	...
instruction, metal, with screws ... raising valve	...	1	...	...	...	...	...
manhole, shield	...	2	...	...	...	...	...
packing, plate yard scale, metal, with screws ...	..	1	...	..	..	..	...
pivot, with bolts	...	...	1	...	...	...	...
securing axles, roller, iron, with screws	...	...	...	...	...	14	10
yard scale, elevation indicator, metal, with screws...	...	1	...	...	...	...	...

¶ *See* note ¶ page 476.
† Discontinued for open emplacements, *see* L. of C. 6543.

Digitized by Google

and Spare Parts for—*continued*.

9·2-inch.				8-inch.	6-inch Disappearing.				6-inch.		5-inch.	4-inch.	Proportion of Spare
Disappearing.		Barbette.		Barbette.	Marks IV. & VI guns.		Mark V. gun.		Vavasseur Central Pivot.	Barbette Central Pivot.	Travelling, 6-ft. parapet.	Travelling, 6-ft. parapet.	Per 10 guns, or less No. of each nature.
Mark I.	Mark II.	Mark I. and I.A.¶	Mark II.	Mark I.	Mark II. and II*.	Mark IV.	Mark I.	Mark III.					
...	...	...	...	...	...	1	...	1	...	...	...	...	1
...	...	...	...	...	...	2	...	2	...	...	...	...	1
...	...	...	...	...	...	...	...	...	...	...	...	...	...
1	...	...	...	...	1	1	1	1	...	...	...	...	...
1	...	...	...	...	1	1	1	1	...	...	...	...	...
1	...	...	...	...	1	1	1	1	...	...	...	...	...
1	...	...	...	...	1	1	1	1	...	...	...	...	...
1	...	...	...	...	1	1	1	1	...	...	...	...	...
1	...	...	...	...	1	1	1	1	...	...	...	...	...
1	...	...	...	...	1	...	1	1	...	...	...	...	...
1	...	...	...	...	...	...	...	...	...	...	...	...	...
1	...	...	...	...	...	...	...	...	...	...	...	...	...
1	...	...	...	...	...	...	...	...	...	...	...	...	...
1	...	...	...	...	...	...	...	...	...	...	...	...	...
1	...	...	...	...	...	...	...	...	...	...	...	...	...
1	...	...	...	...	...	...	...	...	...	...	...	...	...
...	...	...	...	...	...	...	...	...	...	...	...	...	...
2	...	...	...	...	...	...	...	...	...	...	...	...	...
...	...	...	...	...	1	1	...	1	...	...	...	...	...
...	...	...	...	...	1	1	...	1	...	...	...	...	...
...	...	...	...	...	...	1	...	1	...	...	...	...	...
...	...	...	...	...	...	1	...	1	...	...	...	...	...
...	...	...	...	...	1	...	...	...	...	...	...	...	...
1	...	...	...	...	...	...	...	...	...	...	...	...	...
1	...	...	...	...	...	...	...	...	...	...	...	...	...
...	...	...	...	...	...	...	...	...	...	...	...	...	...
...	...	...	...	...	1	1	...	1	...	...	...	...	...
...	...	...	...	...	...	1	...	1	...	...	...	...	...
...	...	...	...	...	1	...	...	...	...	...	...	...	...
1	...	...	...	...	...	...	...	...	...	...	...	...	...
1	...	...	...	...	...	...	...	...	...	...	...	...	...
2	...	...	...	...	1	1	...	1	...	...	...	...	...
...	...	...	...	...	...	...	...	...	...	...	...	...	...
1	1	1	1	1	1	1	1	1	1	1	1	1	...
1	...	...	...	...	1	1	1	1	...	...	...	...	...
1	...	...	...	...	1	1	1	1	...	...	...	...	...
1	...	...	...	...	1	1	1	1	...	...	...	...	...
2	...	...	...	...	1	1	1	1	...	...	...	...	...
1	...	...	...	...	1	1	1	1	...	...	...	...	...
...	1	...	...	...	...	...	...	...	...	...	...	...	...
...	...	...	14	...	...	...	...	...	...	...	...	...	4
1	...	...	...	...	1	1	1	1	...	...	...	...	...

Digitized by Google

B.L. Carriages—Component

Articles.	12-inch.	10-inch.					
		Disappearing.		Barbette.			
	Garrison.	Mark I.	Mark II.	Mark I. C.	Mark I. D.	Mark II.	Mark III.
Plugs emptying hole, hydraulic buffer	...	...	...	...	...	...	...
filling ,, ,, ,, No. 5	2	...	...	...	...	...	...
,, 6	...	...	...	...	...	...	...
,, 7	...	...	...	2	2	...	...
,, 8	...	...	...	...	...	...	...
,, 9	...	...	...	...	...	...	...
,, 21	...	...	...	...	...	2	2
,, 40	...	...	...	...	...	...	...
38407 Equip. 1850 metal, hole, derrick, pump, running back, with chain	...	...	...	...	...	...	1
steel cylinder left	...	...	...	...	...	...	...
steel cylinder right	...	...	...	...	...	...	...
Polnters adjusting, piston rod, steel, with stud and nuts	2	...	...	...	...	...	...
arc, elevating, metal, with stud collar, and nut	...	...	...	...	...	...	...
arc traversing, steel with metal bracket and screws No. 1	...	2§	2§	...	...	...	...
,, 3	...	...	...	...	...	...	...
,, 4	...	...	...	...	...	...	...
Pump, running back	...	...	...	1	1	1	1
Racks, brake, iron	1	...	...	...	...	...	...
Rams, controlling	...	...	...	2	2	...	...
Rings metal, leather-packing, hydraulic buffer	...	...	...	2	2	...	...
packing, hydraulic buffer, leather L section	2	...	...	...	...	2	...
U ,,	...	...	...	2	2	...	...
roller, steel	...	1	...	...	...	...	...
Rods connecting, lever, adjusting, iron	1	...	...	...	...	...	...
steel, piston, with nuts	...	...	...	...	...	...	2
Rollers carriage —	...	...	...	...	...	...	10
carriage No. 1	14	...	...	...	...	...	...
carriage ,, 6	...	...	...	...	...	...	...
carriage ,, 7	...	...	...	...	...	...	...
carriage ,, 8	...	...	...	10	10	...	...
carriage ,, 9	...	...	...	...	...	...	...
carriage ,, 10	...	20	...	...	...	...	...
carriage ,, 11	...	...	...	...	...	...	...
carriage ,, 12‡	...	...	...	...	...	...	...
carriage ,, 21	...	...	...	...	...	6	...
carriage ,, 22	...	...	...	...	...	8	...
metal, guide, lanyards firing and cocking	...	2	...	...	...	...	...
shifting No. 11	...	...	...	...	...	...	...
shifting ,, 12	...	...	...	...	...	...	...
Screws lubricating metal $\frac{1}{16}$ × $\frac{1}{4}$-in.	...	...	...	...	...	...	...
lubricating metal $\frac{1}{8}$ × $\frac{1}{4}$,,	...	...	...	...	...	...	...

¶ *See* note ¶ page 476.

† 1 for 9·2-in. barbette, Mark I and 1A. ‡ Per carriage.

Digitized by Google

and Spare Parts for—*continued.*

9·2-inch.				8-inch.	6-inch Disappearing.				6-inch.		5-inch.	4-inch.	Proportion of Spare.
Disappearing.		Barbette.		Barbette.	Marks IV. & VI. guns.		Mark V. gun.		Vavasseur Central Pivot.	Barbette Central Pivot.	Travelling, 6-ft. parapet.	Travelling, 6-ft. parapet.	Fort or Battery. Per 10 guns, or less No. of each nature.
Mark I.	Mark II.	Mark I. and Ia.¶	Mark II.	Mark I.	Mark II.*	Mark IV.	Mark I.	Mark III.					
...	...	...	...	1	...	...	...	...	2	1	...	...	1
...	...	...	...	...	...	...	...	...	...	...	...	...	2
...	...	...	...	...	...	...	...	...	2	...	...	...	2
...	...	1	...	...	...	...	...	...	...	...	...	...	2†
...	...	...	...	...	...	...	...	...	...	1	...	...	1
...	...	..	...	1	...	...	...	...	...	...	...	...	1
...	...	...	2	...	...	...	...	...	...	...	...	...	2
...	...	...	...	...	...	...	...	...	...	...	1	1	1
...	...	...	...	...	...	...	...	...	...	...	...	...	...
...	...	...	...	...	...	...	...	...	1	...	...	...	...
...	...	...	...	...	...	...	...	...	1	...	...	...	...
...	...	...	...	...	...	...	...	...	...	...	...	...	...
...	...	...	...	...	...	...	...	...	1	...	...	...	...
2§	2§	...	...	...	...	...	...	...	2§	1	...	...	...
...	...	...	...	...	...	...	1	...	...	...	...	...	...
...	...	...	...	...	1	...	...	...	...	...	...	...	...
...	...	...	...	...	...	1	...	...	...	...	...	...	...
...	...	1	1	...	...	...	...	...	...	...	...	...	...
...	...	...	...	...	...	...	...	...	...	...	...	...	...
...	...	1	...	...	...	...	...	...	2	...	...	...	...
...	...	1	...	1	...	...	...	...	2	1	...	...	...
...	...	...	2	...	...	...	...	...	2	...	1	1	2‡
...	...	1	...	1	...	...	...	...	...	1	...	...	2‡‖
1	.	...	...	...	1	1	...	1	...	...	...	...	...
...	...	...	...	...	...	...	...	...	...	...	...	...	...
...	...	...	...	...	...	...	...	...	...	...	...	...	2
...	...	...	...	...	...	...	...	...	...	8	...	...	1§§
...	...	...	...	...	...	...	...	...	...	...	...	...	1
...	...	...	...	...	16	...	...	...	...	...	...	...	...
...	...	...	...	...	...	16	...	16	...	...	...	...	...
...	...	10	...	...	...	...	...	...	...	...	...	...	...
18	...	...	...	...	...	...	...	...	...	...	...	...	...
...	...	...	...	...	...	...	...	...	...	...	...	...	...
...	...	...	...	8	...	...	...	...	...	...	...	...	...
...	...	...	...	...	16	...	...	...	...	...	...	...	...
...	...	...	6	...	...	...	...	...	...	...	...	...	1
...	...	...	8	...	...	...	...	...	...	...	...	...	1
2	...	...	...	...	2	2	...	2	...	...	...	...	...
...	...	...	...	...	...	...	...	...	...	...	1	...	...
...	...	...	...	...	...	...	...	...	...	...	...	1	...
...	...	...	...	...	...	...	...	...	5	...	...	...	2
...	...	...	...	...	...	...	...	...	...	14	...	...	...

§ 1 left and 1 right. ‖ 2 per Fort or Battery of 10 guns or less for 8-in. barbette.
§§ 1 „ „ „ „ 10 „ Mark III.

Digitized by Google

B.L. Carriages—Component

Articles.	12-inch	10-inch.					
		Disappearing.		Barbette.			
	Garrison.	Mark I.	Mark II.	Mark I. C.	Mark I. D.	Mark II.	Mark III.
Screws, set fixing cylinder	...	...	...	...	...	...	...
Shackles, lifting, iron, with pin, collar and key ...	...	...	...	...	...	4	...
Shields, steels, overhead, with connecting plates ...	...	1	...	...	...	...	...
Shoes, drag, No. 2	...	...	...	...	...	...	...
Sockets, shield pillars — bottom	...	8	...	...	...	...	...
Sockets, shield pillars — inside — left — front	...	...	...	...	...	...	...
Sockets, shield pillars — inside — left — rear	...	...	...	...	...	...	...
Sockets, shield pillars — inside — right — front	...	...	...	...	...	...	...
Sockets, shield pillars — inside — right — rear	...	...	...	...	...	...	...
Sockets, shield pillars — top — outside — left — front	...	...	...	...	...	...	...
Sockets, shield pillars — top — outside — left — rear	...	...	...	...	...	...	...
Sockets, shield pillars — top — outside — right — front	...	...	...	...	...	...	...
Sockets, shield pillars — top — outside — right — rear	...	...	...	...	...	...	...
Spindles, steel, rollers guide, lanyards firing and cocking ...	...	1	...	...	...	...	...
Springs, disc — No. 11	...	80	...	...	...	...	...
Springs, disc — „ 12	...	...	...	...	...	...	...
Springs, disc — „ 13	...	...	...	...	...	...	...
Stages, side, with bolts and screws ... ... — left	...	...	1	...	...	...	...
Stages, side, with bolts and screws ... ... — right	...	...	1	...	...	...	...
Standards, guide, rollers with bolts, lanyards firing and cocking — left	...	1	...	...	...	...	...
Standards, guide, rollers with bolts, lanyards firing and cocking — right	...	1	...	...	...	...	...
Staples, iron, lashing — muzzle	...	...	...	...	...	...	...
Staples, iron, lashing — breech — left	...	...	...	...	...	...	...
Staples, iron, lashing — breech — right	...	...	...	...	...	...	...
Stays — steel, tensile, left	...	...	...	...	...	...	...
Stays — pipe, connecting, iron, with bolts and nuts ...	...	2	...	...	...	...	...
Stays — pillar, iron, with bolts and keys	...	8	...	...	...	...	...
Steps, wood — sighting	...	...	...	...	...	...	...
Steps, wood — side	...	...	...	...	...	...	...
Stops, buffer, with bolts — left	...	...	...	...	...	...	...
Stops, buffer, with bolts — right	...	...	...	...	...	...	...
Straps, securing	...	...	...	...	...	...	...
Studs, capsquare, with nuts and split key	...	...	4	...	...	...	...
Trucks, steel —	...	...	...	...	...	...	...
Trucks, steel — front, with spur wheel	...	...	2	...	...	...	...
Trucks, steel — rear	...	...	2	...	...	...	...
Valves — hydraulic buffer, metal	...	2	...	...	2	2	...
Valves — draw off, hydraulic buffer	...	1	...	...	2	2	...
Washers — gran.1st Class, B.	...	...	...	...	...	...	...
Washers — leather, plug, filling	...	...	...	...	...	...	...

57
Gen. No.
4256

¶ *See* note ¶ page 476. † For 12-in. garrison and 4-in. and 5-in.

Digitized by Google

and Spare Parts for—*continued*.

9·2-inch.				8-inch.	6 inch Disappearing.				6-inch.		5-inch.	4-inch.	Proportion of Spare.
Disappearing.		Barbette.		Barbette.	Marks IV. & VI. guns.		Mark V. gun.		Vavasseur Central Pivot.	Barbette Central Pivot.	Travelling, 6-ft. 1 parapet.	Travelling, 6-ft. parapet.	Port or Battery. Per 10 guns, or less No. of each nature.
Mark I.	Mark II.	Mark I. and IA.¶	Mark II.	Mark I.	Mark II. and II*.	Mark IV.	Mark I.	Mark III.					
...	...	...	...	...	...	...	...	...	2	...	...	...	...
...	...	...	4	...	...	...	...	...	...	...	...	...	...
1	...	...	...	...	1	1	1‖	1	...	...	...	...	...
...	...	...	..	...	..	...	...	...	...	...	1	1	...
8	...	...	...	...	...	...	...	...	...	...	...	...	...
...	...	...	...	...	4	...	...	...	...	...	...	...	...
...	...	...	...	...	1	...	...	...	...	...	...	...	...
...	...	...	...	...	1	...	...	...	...	...	...	...	...
...	...	...	...	...	1	...	...	...	...	...	...	...	...
...	...	...	...	...	1	...	...	...	...	...	...	...	...
...	...	...	...	...	1	...	...	...	...	...	...	...	...
...	...	...	...	...	1	...	...	...	...	...	...	...	...
...	...	...	...	...	1	...	...	...	...	...	...	...	...
...	...	...	...	...	1	...	...	...	...	...	...	...	...
...	...	...	...	...	...	2	...	2	...	...	...	...	...
1	...	...	...	...	1	1	...	1	...	...	...	...	...
72	...	...	...	...	...	...	...	...	...	...	...	...	10
...	...	...	...	...	48	...	56	...	...	...	...	...	10
...	...	...	...	...	...	56	..	56	...	...	...	...	10
...	1	...	...	...	...	...	...	...	...	...	...	...	...
...	1	...	...	...	...	...	...	...	...	...	...	...	...
1	...	...	...	...	1	1	...	1	...	...	...	...	...
1	...	...	...	...	1	1	...	1	...	...	...	...	...
...	...	...	...	...	...	...	...	...	...	...	2	...	...
...	...	...	...	...	...	...	...	...	...	...	1	...	...
...	...	...	...	...	...	...	...	...	...	...	1	...	...
...	...	...	...	...	...	...	...	...	...	...	...	..	...
...	...	...	...	...	...	...	...	...	...	...	2	2	...
8	...	...	...	...	8	8	8‖	8	...	...	...	...	...
...	...	...	...	...	...	...	...	...	...	...	1	1	...
...	...	...	...	...	...	...	...	...	...	...	2§	2§	...
...	...	...	...	1	...	...	...	...	...	...	...	...	...
...	...	...	...	1	...	...	...	...	...	...	...	...	...
...	...	...	...	...	...	...	...	...	...	...	17	17	...
...	4	...	...	...	...	...	...	...	...	...	...	...	...
...	...	...	...	...	...	...	4	...	...	...	...	...	...
...	2	...	...	...	...	...	...	...	...	...	...	...	...
...	2	...	...	...	...	...	...	...	...	...	...	...	...
...	...	1	...	1	...	...	...	...	2	1	...	...	...
...	...	1	...	...	...	...	...	...	...	...	1	1	1†
...	...	...	...	...	...	...	...	...	...	...	2	2	1‡
...	...	...	...	...	...	...	...	...	...	...	1	1	3‡

57
Gen. No.
4206

† Per carriage. § 1 left and 1 right. ‖ When so fitted.

Digitized by Google

B.L. Carriages—Component

Articles.			12-inch.	10-inch.					
				Disappearing.		Barbette.			
			Garrison.	Mark I.	Mark II.	Mark I. C.	Mark I. D.	Mark II.	Mark III.
Washers, packing		set of 4 ... ... sets	1	...	...	...	...	...	...
	hydraulic buffer, leather	,, 5 ... ... ,,	...	...	...	...	...	...	...
		,, 6 ... ... ,,	...	...	...	...	...	...	...
		,, 12 ... ... ,,	...	...	...	...	...	1	...
		,, 13 ... ... ,,	...	...	...	1	1	...	...
	pipe, connecting, leather	,, 2 ... ... ,,	...	...	...	1	1	...	...
		,, 6 ... ... ,,	1	...	...	...	...	...	...
		,, 2 ... ... ,,	...	...	...	...	...	1	...
Wheels, 1st Class, B, No. 7			...	...	...	...	...	...	...
Cylinders, Recoil.									
Bolt, connecting ram to crosshead, with nut and key ...			...	1	...	...	...	...	...
Brackets, with screws	guide	plunger, lowering pump, iron ...	...	1	...	...	...	...	...
		rack, raising valve	...	1	...	...	...	...	...
	raising valve		...	1	...	...	...	...	...
Bushes, bottom, metal			...	...	1	...	...	...	...
Caps, metal, recoil valve			...	...	...	...	...	...	...
Chambers, air	left		...	...	1	...	...	...	...
	right		...	...	1	...	...	...	...
Connections, pipe suction, pump lowering			...	...	...	...	...	...	...
Covers	air chamber		...	...	...	...	...	...	...
	recoil cylinder, iron, with bolts		...	1	...	...	...	...	...
	recoil valves, metal		...	6	...	...	...	...	...
	springs, ram		...	1	...	...	...	...	...
Cylinders, steel			...	1	1	...	...	...	...
Gauges	pressure		...	...	1	...	...	...	...
	test, with weights...		...	...	1	...	...	...	...
	water level		...	...	1	...	...	...	...
Glands, metal	—		...	1	1	...	...	...	...
	inner		...	...	...	...	...	...	...
	outer		...	...	...	...	...	...	...
Glasses, gauge (sets of 6)			...	...	1	...	...	...	...
Handles, valve, filling, iron			...	...	...	...	...	...	...
Insertion, jointing			...	...	...	...	...	...	...
Packing, hydraulic	—	lbs.	...	...	...	...	...	...	...
	$\frac{5}{8}$-in. square	length of 50 ins. ... lengths	...	...	...	...	...	...	...
		,, ,, 56 ,, ... ,,	...	2	...	...	...	...	...
	$\frac{7}{8}$-in. ,,	,, ,, 30 ,, ... ,,	...	...	...	...	...	...	...
Pipes, copper, connecting	pump and air vessel (set of 2) ... sets		...	...	1	...	...	...	...
	air vessels ... ... set		...	...	1	...	...	...	...
Plates ...	guide, rod, connecting, with screws		...	...	2	...	...	...	...
	securing, gland, iron ,, ...		...	...	...	...	...	...	...

71
1
2609

¶ *See* note ¶ page 476.
‡ Per carriage.
† 14 lbs. for 9·2-in. and 10-in. E. and A.

Digitized by Google

and Spare Parts for—*continued.*

9·2-inch.				8-inch.	6-inch. Disappearing.				6-inch.		5-inch.	4-inch.	Proportion of Spare.
Disappearing.		Barbette.		Barbette.	Marks IV.& VI. guns.		Mark V. gun.						
Mark I.	Mark II.	Mark I. and I.A.¶	Mark II.	Mark I.	Mark II. and II*.	Mark IV.	Mark I.	Mark III.	Vavasseur Central Pivot.	Barbette Central Pivot.	Travelling, 6-ft. parapet.	Travelling, 6-ft. parapet.	Fort or Battery. Per 10 guns, or less No. of each nature.
...	...	...	...	1	...	...	...	...	...	...	...	...	2‡§
...	...	...	...	...	...	...	...	...	...	1	...	...	2‡
...	...	1	...	...	...	...	...	...	1	...	...	...	2‡
...	...	...	1	...	...	...	...	...	...	...	...	...	2‡
...	...	...	...	...	...	...	...	...	...	...	...	...	2‡
...	...	...	...	...	...	...	...	...	...	...	...	...	1‡
...	...	...	...	...	...	...	...	...	...	...	...	...	1‡
...	...	...	1	...	...	...	...	...	...	...	...	...	1‡
...	...	...	...	...	...	...	...	...	...	...	2	2	...
1	...	...	...	...	...	...	...	...	...	...	...	...	...
1	...	...	...	...	1	1	...	1	...	...	...	...	...
1	...	...	...	...	1	1	...	1	...	...	...	...	...
1	...	...	...	...	1	1	...	1	...	...	...	...	...
...	1	...	...	...	...	...	...	...	...	...	...	...	...
...	...	...	...	...	1	1	...	1	...	...	...	...	1
...	1	...	...	...	...	...	...	...	...	...	...	...	...
...	1	...	...	...	...	...	...	...	...	...	...	...	...
...	...	...	...	...	...	...	1	...	...	...	...	...	1
...	...	...	...	...	...	...	...	...	...	...	...	...	...
1	...	...	...	...	...	...	...	...	...	...	...	...	...
4	...	...	...	...	...	...	...	...	...	...	...	...	1
1	...	...	...	...	...	...	...	...	...	...	...	...	...
1	1	...	...	...	1	1	1	1	...	...	...	...	...
...	1	...	...	...	...	...	...	...	...	...	...	...	...
...	1	...	...	...	...	...	...	...	...	**	...	...	...
...	1	...	...	...	...	...	...	...	...	...	...	...	...
1	1	...	...	...	...	...	...	...	...	...	...	...	...
...	...	...	...	...	1	1	1	1	...	...	...	...	...
...	...	...	...	...	1	1	1	1	...	...	...	...	...
...	1	...	...	...	...	...	1	...	...	...	...	...	...
...	...	...	...	...	...	...	1	...	...	...	...	...	...
...	...	...	...	...	...	...	...	...	...	...	...	...	†
...	...	...	...	...	...	...	3	...	...	...	...	...	3
2	...	...	...	...	...	...	...	...	...	...	...	...	2‡
...	...	...	...	...	...	...	...	...	...	...	...	...	2‡
...	...	...	...	...	2	2	...	2	...	...	...	...	2‡
...	1	...	...	...	...	...	...	...	...	...	...	...	1
...	1	...	...	...	...	...	...	...	...	...	...	...	1
...	2	...	...	...	...	...	...	...	...	...	...	...	...
...	...	...	...	...	...	...	1	...	...	...	...	...	...

§ 2 per fort or battery of 10 guns or less for 8-inch barbette.

57 Australia 249

Digitized by Google

B.L. Carriages—Component

Articles.				12-inch.	10-inch.					
					Disappearing		Barbette.			
				Garrison.	Mark I.	Mark II.	Mark I.		Mark II	Mark III.
							C.	D.		
57 / Gen. No. / 2445 — **Plugs**	air escape ... ... steel			...	1	...	...	...	...	...
	air chambers	ordinary ... ... metal		...	9	...	...	...	...	...
		pump, connection ,,		...	1	...	...	...	...	...
		for valve, draw off ,,		...	1	...	...	...	...	...
		ordinary ... ... steel		...	...	...	...	...	...	...
		pump, connection ,,		...	...	...	...	...	...	...
		for valve, draw off ,,		...	...	...	...	...	...	...
	bottom			...	...	...	...	...	...	...
	centre ... ... metal			...	...	...	...	...	...	...
Rams	iron, with key...			...	...	...	...	...	...	...
	metal —			...	1	...	...	...	...	...
	metal with nut and screw			...	...	...	...	...	...	...
	steel			...	...	1	...	...	...	...
71 / 1 / 2609 — **Rings**	P.B. gland, bottom			...	1	...	...	...	...	...
	P.B. ,, top			...	1	...	...	...	...	...
	metal, leather, packing			...	...	...	...	...	...	...
	india-rubber, for gauge glass (set of 6)...		sets	...	...	1	...	...	...	...
	packing, L section			...	...	1	...	...	...	...
	leather U section			...	...	1	...	...	...	...
	steel, filling in gland			...	1	...	...	...	...	...
Rods, connecting, steel, with cap, bolts and lubricating tube				...	...	1	...	...	...	...
Springs, disc	No. 19			...	15	...	...	...	...	...
	,, 20			...	...	...	...	...	...	...
	,, 21			...	...	...	...	...	...	...
	,, 22			...	...	...	...	...	...	...
Trunnions, steel, recoil, cylinder, with screws ...				...	1	...	...	...	...	...
Tubes, draw off				...	1	...	...	...	...	...
Tubes, india-rubber, valve release, with coupling				...	...	1	...	...	...	...
Valves, metal	blow off			...	...	1	...	...	...	...
	by-pass, with spindle and hand wheel			...	,,	1	...	...	...	...
	clack			...	...	...	...	...	...	...
	draw off			...	1	...	...	...	...	...
	filling			...	1	...	...	...	...	...
	pump, connecting, self-acting...			...	...	2	...	...	...	...
	recoil —			...	6	...	...	...	...	...
	recoil with connecting pipe ...	left		...	...	1	...	...	...	...
	recoil with connecting pipe ...	right		...	...	1	...	...	...	...
	stop, pump, delivery			...	1	...	...	...	...	...
	stop, pump, lowering suction ...			...	1	...	...	...	...	...
	water level			...	1	...	...	...	...	...
Washers, packing, cylinder recoil	leather, set of 2 ...		sets	...	...	...	...	...	...	...
	lead, ,, 5 ...		,,	...	...	...	...	...	...	...
	leather, 1			...	...	...	...	...	...	...
	lead, set of 16 ...		sets	...	...	...	...	...	...	...

¶ *See* note ¶ page 476.
‖ 6-in. disappearing, Mark II.
† Per carriage.
** 6-in. disappearing, Mark II*.

Digitized by Google

and Spare Parts for—*continued.*

9·2-inch.				8-inch.	6-inch. Disappearing.				6-inch.		5-inch.	4-inch.	Proportion of Spare.
Disappearing		Barbette.		Barbette.	Marks IV. & VI. gun.		Mark V. gun.		Vavasseur Central Pivot.	Barbette Central Pivot.	Travelling, 6-ft. parapet.	Travelling, 6-ft. parapet.	Fort or Battery. Per 10 guns, or less No. of each nature.
Mark I.	Mark II.	Mark I. and IA.¶	Mark II.	Mark I.	Mark II. and II*.	Mark IV.	Mark I.	Mark III.					
1	...	...	...	...	1	1	...	1	...	...	...	...	1†
...	...	...	...	...	...	...	...	...	...	...	...	...	1
1	..	...	...	...	...	...	...	...	...	...	...	...	...
1	..	...	...	...	...	...	...	...	...	...	...	...	...
...	...	...	...	...	9	8	...	8	...	...	...	...	1
...	...	...	...	...	1	1	...	1	...	...	...	...	...
...	...	...	...	...	1	1	...	1	...	...	...	...	...
...	...	...	...	...	...	...	1	...	...	...	...	...	...
1	..	...	...	...	...	...	...	...	...	...	...	...	...
...	...	...	...	...	...	...	1	...	...	...	...	...	...
1	...	...	...	...	...	...	...	...	...	...	...	...	...
...	..	...	...	...	1	1	...	1	...	...	...	...	...
..	1	...	...	...	...	...	...	...	...	...	...	...	...
1	...	...	...	...	1	1	...	1	...	...	...	...	1
1	...	...	...	...	1	1	...	1	...	...	...	...	...
...	...	...	...	...	...	...	1	...	...	...	...	...	...
...	1	...	...	...	...	...	...	...	...	...	...	...	1
...	1	...	...	...	...	...	...	...	...	...	...	...	2†
...	1	...	...	...	...	...	1	...	...	...	...	...	2†
1	...	...	...	...	1	1	...	1	...	...	...	...	...
...	1	...	...	...	...	...	...	...	...	...	...	...	...
..	...	...	...	...	...	...	...	...	...	...	...	...	2†
15	...	...	...	...	...	...	...	...	...	...	...	...	2†
...	...	...	...	...	13‖	13	...	13	...	...	...	...	2†
...	...	...	...	...	13**	...	...	...	...	...	...	...	2†
1	...	...	...	...	...	...	...	...	...	...	...	...	...
1	..	...	...	...	1	1	...	1	...	...	...	...	...
...	1	...	...	...	...	...	...	...	...	...	...	...	...
...	1	...	...	...	...	...	...	...	...	...	...	...	...
...	1	...	...	...	...	...	...	...	...	...	...	...	1
...	...	...	...	...	...	...	1	...	...	...	...	...	...
1	...	...	...	...	1	1	1	1	...	...	...	...	...
1	...	...	...	...	1	1	1	1	...	...	...	...	1
...	2	...	...	...	...	...	...	...	...	...	...	...	...
4	..	...	...	...	1	1	2	1	...	...	...	...	1
...	1	...	...	...	...	...	...	...	...	...	...	...	...
...	1	...	...	...	...	...	...	...	...	...	...	...	...
1	...	...	...	..	1	1	...	1	...	...	...	...	...
1	...	...	...	...	1	1	...	1	...	...	...	...	...
1	...	...	...	...	1	1	1	1	...	...	...	...	1
...	...	...	...	...	...	...	1	...	...	...	...	...	2†
...	...	...	...	...	...	...	1	...	...	...	...	...	§
...	...	...	...	...	...	1	...	1	...	...	...	...	1†
...	..	...	...	...	...	1	...	1	...	...	...	...	§

57
Malta
9507

§ In putting forward requisitions, lead of section ·4-in. × ·2-inch should be demanded by the foot run, and made into washers locally.

Digitized by Google

B.L. Carriages—Component

Articles.	12-inch.	10-inch.				
		Disappearing.	Barbette.			
	Garrison.	Mark I.	Mark II.	Mark I. C.	Mark I. D.	Mark II.	Mark III.
Washers, packing, cylinder recoil: leather, 1	...	...	...	...	...	...	...
Washers, packing, cylinder recoil: lead, set of 17 sets	...	...	...	...	...	...	...
Washers, packing, cylinder recoil: leather, 1	...	...	...	...	...	...	...
Washers, packing, cylinder recoil: lead, set of 25 sets	...	...	...	...	...	...	...
Washers, packing, cylinder recoil: leather, 1	...	1	...	...	...	...	...
Washers, packing, cylinder recoil: lead, set of 28 sets	...	1	...	...	...	...	...
Washers, packing, cylinder recoil: leather, ,, 33 ,,	...	...	1	...	...	...	...
GEAR, ELEVATING.							
Arcs, elevating: left	...	1	1	...	...	...	...
Arcs, elevating: right	...	...	1	...	...	...	...
Arcs, elevating: right	...	1	...	...	...	...	...
Arcs, elevating: steel	...	...	...	1	1	...	1
Bands, friction, brake drum, with pin collar and split key	...	1	...	...	...	...	...
Blocks, driving, iron, friction ring	...	1	...	...	...	...	...
Bolts: cramp, brake	...	...	...	...	...	...	...
Bolts: jamming, brake with nut	...	...	...	1	1	...	...
Cones: friction: brake, drum, steel with nuts	...	1	...	...	...	...	...
Cones: friction: spur wheel: with key	...	...	2	...	...	...	...
Cones: friction: spur wheel: steel	...	...	...	...	...	...	...
Cones: friction: spur wheel: metal	...	...	...	...	...	...	...
Cones: steel: plain	...	...	...	...	...	...	1
Cones: steel: with boss	...	...	...	...	...	...	1
Cotters, wheel, hand elevating, steel	...	...	...	...	...	...	...
Covers: pinions and wheel, rear of slide, metal	...	...	...	...	...	...	...
Covers: wheel, spur and pinion, iron, with screws	...	...	2	...	...	...	...
Cramps, brake	...	...	...	...	...	...	...
Discs, metal; graduated indicator	...	...	...	...	...	...	1
Drums, brake, iron	...	1	...	...	...	...	...
Guards, metal: disc, graduated, indicator	...	...	...	...	...	...	1
Guards, metal: wheel, worm: inner	...	...	...	...	...	...	1
Guards, metal: wheel, worm: outer	...	...	...	...	...	...	1
Guards, wheel, spur and pinion: —	...	...	...	...	...	...	...
Guards, wheel, spur and pinion: metal, with bolts	...	...	...	1	1	...	...
Handles, brake, iron	...	...	...	1	1	...	...
Indicators, metal, pointer	...	...	...	...	...	...	...
Keys, split, round, loop head: cotter, wheel, hand elevating, ·25-in. × 1·125-in.	...	...	...	...	...	...	...
Keys, split, round, loop head: handle, wheel, hand elevating, ·12-in. × 1·25-in.	...	...	...	...	...	...	...
Keys, split, round, loop head: spindle worm, elevating: ·25-in. × 3·0-in.	...	...	...	...	...	...	...
Keys, split, round, loop head: spindle worm, elevating: ·312 ,, × 3·0 ,,	...	...	...	...	...	...	...
Nuts, adjusting, spring, equalizing brake iron	...	2	...	...	...	...	...
Pawls, band, brake, iron	...	1	...	...	...	...	...

¶ *See* note ¶ page 476. † Per carriage.
‡ For 4-inch, 5-inch, and 8-inch, and 10-inch barbette Mark III. only.

Digitized by Google

and Spare Parts for—*continued*.

9·2-inch.				8-inch.	6-inch. Disappearing.				6-inch.		5-inch.	4-inch.	Proportion of Spare.
Disappearing.		Barbette.		Barbette.	Marks IV. & VI. guns.		Mark V. gun.		Vavasseur Central Pivot.	Barbette Central Pivot.	Travelling, 6-ft. parapet	Travelling, 6-ft. parapet.	Per 10 guns, or less No. of each nature.
Mark I.	Mark II.	Mark I. and 1A.¶	Mark II.	Mark I.	Mark II. and II*.	Mark IV.	Mark I.	Mark III.					For or Battery.
...	...	...	...	...	1	...	...	...	...	...	...	...	1†
...	...	...	...	...	1	...	...	...	...	...	...	...	§
1	...	...	...	...	...	...	...	...	...	...	...	...	1†
1	...	...	...	...	...	...	...	...	...	...	...	...	§
...	...	...	...	...	...	...	...	...	...	...	...	...	1†
...	...	...	...	...	...	...	...	...	...	...	...	...	§
...	1	...	...	...	...	...	...	...	...	...	...	...	2†
1	1	...	...	...	1	1	1	1	...	...	...	...	...
...	1	...	...	...	...	...	...	...	...	...	...	...	...
1	...	...	...	...	1	1	1	1	...	...	...	...	...
...	...	1	...	1	...	...	...	...	1	...	1	1	1‡
1	...	...	...	...	1	1	1	1	...	...	...	...	...
1	...	...	...	...	...	...	...	...	...	...	...	...	...
...	...	...	...	1	...	...	...	...	...	...	...	...	...
...	...	...	...	...	...	...	...	...	...	...	...	...	...
1	...	...	...	...	1	1	1	1	...	...	...	...	...
...	2	...	...	...	...	...	...	...	...	...	...	...	1
...	...	...	...	...	1	1	1	1	...	...	...	...	...
...	...	...	...	1	...	...	...	...	...	...	...	...	...
...	...	...	...	...	...	...	...	...	...	...	...	...	...
...	...	...	...	...	...	...	...	...	...	...	...	...	...
...	...	...	...	...	...	...	...	...	1	...	...	...	...
...	...	...	...	...	...	...	...	...	1	...	...	...	...
...	2	...	...	...	...	...	...	...	...	...	...	...	...
...	...	...	...	1	...	...	...	...	...	...	...	...	...
...	...	...	...	...	...	...	...	...	...	...	...	...	...
1	...	...	...	...	1	1	1	1	...	...	...	...	...
...	...	...	...	...	...	...	...	...	...	...	...	...	...
...	...	...	...	...	...	...	...	...	...	...	...	...	...
...	...	...	...	...	...	...	...	...	...	...	...	...	...
...	...	...	...	1	...	...	...	...	1	...	...	...	...
...	...	1	...	...	...	...	...	...	...	...	...	...	...
...	...	1	...	1	...	...	...	...	...	...	...	...	...
...	2	...	...	...	...	...	...	...	...	...	...	...	...
...	...	...	...	...	...	...	...	...	...	...	...	...	4‖
...	...	...	...	...	...	...	...	...	...	...	...	...	4‖
...	...	...	...	...	...	...	...	...	...	...	...	...	4‖
...	...	...	...	...	...	...	...	...	...	...	...	...	4‖
2	...	...	...	...	...	...	...	...	...	...	...	...	...
1	...	...	...	...	1	1	1	1	...	...	...	...	...

§ In putting forward requisitions, lead of section ·4-in. × ·2-inch should be demanded by the foot run, and made into washers locally.

‖ For 6-inch Vavasseur Central Pivot only.

Digitized by Google

B.L. Carriages—Component

Articles.	12-inch.	10-inch.					
		Disappearing.		Barbette.			
	Garrison.	Mark I.	Mark II.	Mark I. C.	Mark I. D.	Mark II.	Mark III.
Pintons							
elevating: rear of slide	...	...	...	...	...	...	...
elevating: 1st motion, with spindle, collar and key	...	...	2	...	...	...	...
elevating: 2nd motion, with spindle, collar and key	...	...	2	...	...	...	...
3rd motion	...	...	2	...	...	...	...
spur: metal, 1st motion shaft, 11 teeth	...	...	...	...	...	...	...
spur: steel, 1st " " 13 "	...	1	...	...	...	...	...
spur: steel, 2nd " " 10 "	...	...	...	...	...	...	...
spur: steel, 2nd " " 15 "	...	1	...	...	...	...	...
spur: steel, 3rd " " 15 "	...	2	...	...	...	...	...
indicator, with spindle and nuts, 45 teeth: metal	...	...	...	...	...	...	1
indicator, with spindle and nuts, 45 teeth: steel	...	...	...	...	...	...	1
steel, bevel, 15 teeth: spindle, 1st motion	...	...	...	...	...	...	1
steel, bevel, 15 teeth: shaft, 2nd motion	...	...	...	...	...	...	1
steel, bevel, 15 teeth: shaft, 2nd motion, with long boss	...	...	...	...	...	...	1
steel, bevel, 15 teeth: shaft, worm	...	...	...	...	...	...	1
steel, with spindle: and nuts	...	...	...	...	...	...	...
steel, with spindle: spring, washer, and nuts	...	...	...	...	...	...	1
steel, with spindles: 1st motion, elevating, with collar, nut, and key	...	...	...	...	...	...	...
steel, with spindles: 1st motion, with nut and split key	...	...	...	1	1	...	...
steel, with spindles: 2nd motion, with friction rings, spring, washers, nuts, and split keys	...	...	...	1	1	...	...
steel, with spindles: 2nd motion, elevating, with nut and metal ring	...	...	...	...	...	...	...
Pins, steel, elevating arc, with collar and split key	...	2	...	...	...	...	...
71 / 1 / 6216 **Plates**, friction, steel, spur wheel	...	1	...	...	...	...	...
Plates, metal	...	...	...	...	...	...	1
Plates, yard scale, left	...	...	1	...	...	...	...
Plates, elevation indicator, right	...	...	1	...	...	...	...
Plugs, jamming, brake, metal ·74-in. thick	...	...	...	1	1	...	...
Plugs, jamming, brake, metal ·86 " "	...	...	...	...	...	...	...
71 / 1 / 6216 **Pointers**, metal, indicator, with bolts	...	...	...	...	...	...	...
Pointers, metal, indicator	...	...	...	...	...	...	1
Pointers, steel, arc, elevating	...	1	...	...	...	...	...
Pointers, steel, plate, yard	...	1	...	...	...	...	...
Pointers, steel, scale with screws, left	...	...	1	...	...	...	...
Pointers, steel, scale with screws, right	...	...	1	...	...	...	...
Rings, friction, pinion, spindle, 2nd motion, metal, thick	...	...	...	1	1	...	...
Rings, friction, pinion, spindle, 2nd motion, metal, thin	...	...	...	4	4	...	...
Rings, friction, pinion, spindle, 2nd motion, steel, large	...	...	...	1	1	...	...
Rings, friction, pinion, spindle, 2nd motion, steel, small, thick	...	...	...	1	1	...	...
Rings, friction, pinion, spindle, 2nd motion, steel, small, thin	...	...	...	3	3	...	...
Rings, friction, manganese, bronze	...	...	...	...	...	...	...
Rings, friction, steel, thick	...	...	...	...	...	...	...
Rings, friction, steel, thin	...	...	...	...	...	...	...
Rings, friction, wheel, spur, metal, thick	...	5	...	...	...	...	...
Rings, friction, wheel, spur, metal, thin	...	1	...	...	...	...	...
Rings, friction, wheel, spur, steel	...	5	...	...	...	...	...

¶ *See* note ¶ page 476.

Digitized by Google

and Spare Parts for—*continued.*

9·2-inch.				8-inch.	6-inch. Disappearing.				6-inch.		5-inch.	4-inch.	Proportion of Spare.
Disappearing.		Barbette.		Barbette.	Marks IV. & VI. guns.		Mark V. gun.						
Mark I.	Mark II.	Mark I. and IA.¶	Mark II.	Mark I.	Mark II. and II.*	Mark IV.	Mark I.	Mark III.	Vavasseur Central Pivot.	Barbette Central Pivot.	Travelling, 6-ft. parapet.	Travelling, 6-ft. parapet.	Fort or Battery. Per 10 guns, or less No. of each nature.
...	...	...	...	...	...	...	...	...	2	...	...	...	...
...	2	...	...	...	...	...	...	...	...	...	...	...	...
...	2	...	...	...	...	...	...	...	...	...	...	...	...
...	2	...	...	...	...	...	...	...	...	...	...	...	...
...	...	...	...	...	1	1	1	1	...	...	...	...	...
1	...	...	...	...	...	...	...	...	...	...	...	...	...
...	...	...	...	...	2	2	2	2	...	...	...	...	...
1	...	...	...	...	...	...	...	...	...	...	...	...	...
2	...	...	...	...	...	...	...	...	...	...	...	...	...
...	...	...	...	...	...	...	...	...	...	...	...	...	...
...	...	...	...	...	...	...	...	...	...	...	...	...	...
...	...	...	...	...	...	...	...	...	...	...	...	...	...
...	...	...	...	...	...	...	...	...	...	...	...	...	...
...	...	...	...	...	...	...	...	...	...	...	...	...	...
...	...	...	...	...	...	...	...	...	1	...	...	...	...
...	...	...	...	...	...	...	...	...	...	...	1	1	1
...	...	...	...	1	...	...	...	...	...	...	...	...	1
...	...	1	...	...	...	...	...	...	...	...	...	...	...
...	...	1	...	...	...	...	...	...	...	...	...	...	...
...	...	...	...	1	...	...	...	...	...	...	...	...	...
2	...	...	...	...	2	2	2	2	...	...	...	...	...
1	...	...	...	...	...	...	...	...	...	...	...	...	...
...	...	...	...	...	...	...	...	...	...	...	...	...	...
...	...	...	...	...	...	...	...	...	...	...	...	...	...
...	...	...	...	...	...	...	...	...	...	...	...	...	...
...	...	1	...	...	...	...	...	...	...	...	...	...	...
...	...	...	...	1	...	...	...	...	...	...	...	...	...
...	...	...	...	1	...	...	...	...	...	...	...	...	...
...	2	...	...	...	...	...	...	...	...	...	...	...	...
...	...	...	...	...	...	...	...	...	...	...	...	...	...
1	...	...	...	...	1	1	1	1	...	...	...	...	...
1	...	...	...	...	1	1	1	1	...	...	...	...	...
...	...	...	...	...	...	...	...	...	...	...	...	...	...
...	...	...	...	...	...	...	...	...	...	...	...	...	...
...	...	1	...	...	...	...	...	...	...	...	...	...	1
...	...	4	...	...	...	...	...	...	...	...	...	...	2
...	...	1	...	...	...	...	...	...	...	...	...	...	1
...	...	1	...	...	...	...	...	...	...	...	...	...	1
...	...	3	...	...	...	...	...	...	...	...	...	...	2
...	...	...	...	...	...	...	...	...	4	4	...	...	2
...	...	...	...	...	...	...	...	...	2	2	...	...	1
...	...	...	...	...	...	...	...	...	3	3	...	...	1
...	...	...	...	...	...	...	...	...	...	...	...	...	...
5	...	...	...	...	...	...	...	...	...	...	...	...	...
1	...	...	...	...	...	...	...	...	...	...	...	...	...
5	...	...	...	...	...	...	...	...	...	...	...	...	...

Digitized by Google

B.L. Carriages—Component

Articles.	12-inch.	10-inch.					
		Disappearing.		Barbette.			
	Garrison.	Mark I.	Mark II.	Mark I. C.	Mark I. D.	Mark II.	Mark III.
Rods... connecting, iron left	...	...	1	...	...	...	...
Rods... connecting, iron right ...	...	...	1	...	...	...	...
Rods... elevating left ...	...	...	...	...	...	...	...
Rods... elevating right ...	...	...	...	...	...	...	...
Rods... elevating consisting of double and single eye, spring box, spring bolt, and set screw	...	2¶	...	...	...	...	...
Screws jamming ...	...	...	1	...	...	...	...
Screws ,, brake, iron... ...	...	...	...	1	1	...	...
Shafts steel, pinion, rear of slide, with key, washer, and pin	...	...	...	...	...	...	...
Shafts steel 2nd motion, in 2 pieces, with coupling, collar and keys	...	...	...	...	...	...	1
Shafts steel worm... ...	...	...	...	...	...	..	1
Shafts 1st motion with collars and keys ...	...	1	...	...	...	...	...
Shafts 1st motion with collar and key ...	...	...	...	...	...	...	...
Shafts 1st motion ,, ,, pin, and key...	...	...	...	...	...	...	...
Shafts 2nd motion with collars, keys, and nuts ...	...	...	...	...	...	...	...
Shafts 2nd motion with keys	...	1	...	...	...	...	...
Shafts 3rd motion with keys and nuts ...	...	...	1	...	...	...	...
Shafts 3rd motion with nuts, caps, and pins	...	1	...	...	...	...	...
Shafts rod, connecting	...	...	1	...	...	...	...
Spindles steel, worm, with collar and nut ...	...	...	...	...	...	...	...
Spindles ,, wheel at rear of slide, with nut and pin	...	...	...	...	...	...	...
Spindles ,, 1st motion, with collar and nut ...	...	...	...	...	...	...	1
Springs, steel brake, drum... ...	...	1	...	...	...	...	...
Springs, steel cone, spur, wheel — ...	...	...	...	...	...	...	...
Springs, steel cone, spur, wheel — ... ... pairs	...	...	6	...	...	...	...
Springs, steel disc No. 14 ...	...	2	...	...	...	...	...
Springs, steel disc ,, 15 ...	...	...	...	...	...	...	...
Springs, steel disc ,, 17 ...	...	...	...	...	...	...	...
Springs, steel disc ,, 25 ...	...	...	...	1	1	...	...
Springs, steel disc ,, 26 ...	...	...	...	...	...	...	1
Springs, steel elevating arc, with bolts ...	...	2	...	...	...	...	...
Springs, steel elevating rod ...	...	2	...	...	...	...	...
Springs, steel friction cone ...	...	...	...	...	...	...	...
Springs, steel washer, spindle, elevating ...	...	...	...	...	...	...	...
Stops, handle, brake, iron	...	...	...	1	1	...	...
Studs, pawl band, brake, with nuts ...	...	1	...	...	...	...	...
Washers, spring, pinion, spindle ...	...	...	...	...	...	...	...
Wheels hand, iron	...	2	2	1	1	...	1
Wheels elevating, rear of slide ...	...	...	...	...	...	...	...
Wheels metal spur, 56 teeth ...	...	...	...	...	...	...	...
Wheels metal hand, elevating	...	...	...	...	...	...	...
Wheels metal worm with friction cone and feather	...	...	...	...	...	...	...
Wheels metal worm — —	...	...	...	...	...	...	1

¶ *See* note ¶ page 476. † 1 per carriage.

Digitized by Google

and Spare Parts for—*continued.*

9·2-inch.				8-inch.	6-inch Disappearing.				6-inch.		5-inch.	4-inch.	Proportion of Spare.
Disappearing.		Barbette.		Barbette.	Marks IV. & VI. guns.		Mark V. gun.						
Mark I.	Mark II.	Mark I. and I.A.¶	Mark II.	Mark I.	Mark II.* and II.*	Mark IV.	Mark I.	Mark III.	Vavasseur Central Pivot.	Barbette Central Pivot.	Travelling, 6-ft. parapet.	Travelling, 6-ft. parapet.	Fort or Battery. Per 10 guns, or less No. of each nature.
...	1	...	...	...	...	...	...	...	...	...	...	...	} 1
...	1	...	...	...	...	...	...	...	...	...	...	...	
...	...	...	...	...	1	1	1	1	...	...	...	...	...
...	...	...	...	...	1	1	1	1	...	...	...	...	...
2‖	...	...	...	...	...	...	...	...	...	...	...	...	...
...	1	...	...	...	...	...	...	...	...	...	...	...	...
...	...	1	...	1	...	...	...	...	...	...	...	...	...
...	...	...	...	...	...	...	...	...	1	...	...	...	...
...	...	...	...	...	...	...	...	...	...	...	...	...	...
...	...	...	...	...	...	...	...	...	...	...	...	...	...
1	...	...	...	...	...	...	...	...	...	...	...	...	...
...	...	...	...	...	...	...	1	...	...	...	...	...	...
...	...	...	...	...	1	1	...	1	...	...	...	...	...
...	...	...	...	...	1	1	1	1	...	...	...	...	1
1	...	...	...	...	...	...	...	...	...	...	...	...	...
...	1	...	...	...	...	...	...	...	...	...	...	...	...
1	...	...	...	...	...	...	...	...	...	...	...	...	...
...	1	...	...	...	...	...	...	...	1	...	1	1	...
...	...	...	...	...	...	...	...	...	1	...	...	...	...
...	...	...	...	...	...	...	...	...	...	...	...	...	...
1	...	...	...	...	1	...	1	...	...	...	...	...	1†
...	...	...	...	...	1	...	1	...	...	...	...	...	1‡
...	6	...	...	...	...	...	...	...	...	...	...	...	3
2	...	...	...	...	...	...	...	...	...	...	...	...	...
...	...	...	...	...	...	3	...	3	...	...	...	...	1†
...	...	...	...	...	...	1	...	1	...	...	...	...	1†
...	...	1	...	...	...	...	...	...	...	...	...	...	2
...	...	...	...	...	...	...	...	...	...	...	...	...	...
2	...	...	...	...	...	...	...	...	...	...	...	...	...
2	...	...	...	...	...	...	...	...	...	...	...	...	...
...	...	...	...	1	...	...	...	...	...	...	...	...	1†
...	...	...	...	...	...	...	...	...	1	...	...	...	...
...	...	1	...	...	...	...	...	...	...	...	...	...	...
1	...	...	...	...	...	...	...	...	...	...	...	...	...
2	2	1	...	1	1	1	1	1	1	1	...	...	1‡
...	...	...	...	...	...	...	...	...	...	...	...	...	...
...	...	...	...	...	1	1	1	1	1	...	...	...	...
...	...	...	...	...	...	...	...	...	...	...	1	1	1§
...	...	...	...	...	...	...	...	...	...	...	1	1	...
...	...	...	...	...	...	...	...	...	1	...	...	...	...

‡ 2 for 6-in. barbette. (EQ. R.)

§ For 4 and 5-in. siege.

‖ 1 left and 1 right.

Digitized by Google

B.L. Carriages—Component

Articles	12-inch.	10-inch.					
		Disappearing.		Barbette.			
	Garrison.	Mark I.	Mark II.	Mark I. C.	Mark I. D.	Mark II.	Mark III.
Wheels, spur — 2nd motion	...	...	2	...	...	...	...
Wheels, spur — 2nd motion, shaft, 60 teeth	...	1	...	...	...	...	...
Wheels, spur — 3rd motion, shaft, 56 teeth	...	1	...	...	...	...	...
Wheels, spur — cone friction	...	...	2	...	...	...	...
Wheels, spur — 30 teeth	...	...	...	...	...	...	...
Wheels, spur — 63 ,, steel	...	...	...	1	1	...	...
Worms, elevating	...	...	...	...	...	...	...
GEAR, ELEVATION INDICATOR.							
Arcs, metal, with bolts	...	...	...	1	1	...	...
Bushes, metal, spindle pinion	...	...	...	1	1	...	...
Discs, metal, graduated, with screws	...	...	...	1	1	...	...
Guards, disc, metal, with bolts, graduated	...	...	...	1	1	...	...
Plates, metal, yard, scale, with screws	...	...	...	1	1	...	...
Pinions — jamming, metal, with collar	...	...	...	1	1	...	...
Pinions — steel, with spindle, disc springs and nut	...	...	...	1	1	...	...
Pointers, indicator, metal, with bolts	...	...	...	1	1	...	...
Springs, disc, No. 29	...	...	...	2	2	...	...
GEAR, LOADING.							
Arcs, loading, with cradle, pin, and jamming screw	...	...	1	...	...	...	...
Chains, endless	...	...	1	...	...	...	...
Covers, with screws	...	...	1	...	...	...	...
Handles, winch, iron	...	...	2	...	...	...	...
Pawls, wheel, ratchet	...	...	1	...	...	...	...
Pinions, steel, 2nd motion, with collar and key	...	...	1	...	...	...	...
Rollers, guide — lower	...	...	2	...	...	...	...
Rollers, guide — upper	...	...	2	...	...	...	...
Shafts, winch handle	...	...	1	...	...	...	...
Spindles, roller, guide, with key	...	...	3	...	...	...	...
Trays, projectile	...	...	...	...	...	...	...
Wheels — ratchet	...	...	1	...	...	...	...
Wheels — sprocket, large	...	...	1	...	...	...	...
Wheels — sprocket, small	...	...	1	...	...	...	...
GEAR, PUMP, LOWERING.							
Guards, pump, lowering iron, with screws	...	...	...	...	...	...	...
Handles, socket, with chain and pin	...	1	...	...	...	...	...
Levers, shaft, cross — link, connecting, with pin, 1st motion shaft	...	1	...	...	...	...	...
Levers, shaft, cross — collar, and split key, 2nd ,, ,,	...	1	...	...	...	...	...
Levers, shaft, cross — plunger	...	...	...	...	...	...	...
Levers, shaft, cross — ,, with roller and pin	...	1	...	...	...	...	...
Levers, shaft, cross — socket handle	...	1	...	...	...	...	...

¶ *See* note ¶ page 476. † For 10-inch, Mark II., disappearing only.

Digitized by Google

and Spare Parts for—*continued.*

9·2-inch.				8-inch.	6-inch. Disappearing.				6-inch.		5-inch.	4-inch.	Proportion of Spare.
Disappearing.		Barbette.		Barbette.	Marks IV.& VI. guns.		Mark V. gun.		Vavasseur Central Pivot.	Barbette Central Pivot.	Travelling, 6-ft. parapet.	Travelling, 6-ft. parapet.	Fort or Battery. Per 10 guns, or less No. of each nature.
Mark I.	Mark II.	Mark I. and Ia. ¶	Mark II.	Mark I.	Mark II. and II.*	Mark IV.	Mark I.	Mark III.					
...	2	...	...	...	...	...	...	...	...	...	...	...	...
1	...	...	...	...	...	...	...	...	...	...	...	...	...
1	...	...	...	...	...	...	...	...	...	...	...	...	...
...	2	...	...	...	...	...	...	...	...	...	...	...	...
...	...	...	...	1	...	...	...	...	...	...	...	...	...
...	...	1	...	...	...	...	...	...	...	...	...	...	...
...	...	...	...	...	...	...	...	...	1	...	...	...	...
...	...	1	...	...	...	...	...	...	...	...	...	...	...
...	...	1	...	...	...	...	...	...	...	...	...	...	...
...	...	1	...	...	...	...	...	...	1	1	...	...	...
...	...	1	...	...	...	...	...	...	...	...	...	...	...
...	...	1	...	...	...	...	...	...	1	1	...	...	...
...	...	1	...	...	...	...	...	...	...	...	...	...	...
...	...	1	...	...	...	...	...	...	...	...	...	...	...
...	...	1	...	...	...	...	...	...	1	1	...	...	...
...	...	2	...	...	...	...	...	...	...	...	...	...	...
...	1	...	...	...	...	...	...	...	...	...	...	...	...
...	1	...	...	...	...	...	...	...	...	...	...	...	1
...	1	...	...	...	...	...	...	...	...	...	...	...	...
...	2	...	...	...	...	...	...	...	...	...	...	...	...
...	1	...	...	...	...	...	...	...	...	...	...	...	...
...	1	...	...	...	...	...	...	...	...	...	...	...	...
...	2	...	...	...	...	...	...	...	...	...	...	...	...
...	2	...	...	...	...	...	...	...	...	...	...	...	...
...	1	...	...	...	...	...	...	...	...	...	...	...	...
...	3	...	...	...	...	...	...	...	...	...	...	...	...
...	...	...	...	...	...	...	...	...	...	...	...	...	2†
...	1	...	...	...	...	...	...	...	...	...	...	...	...
...	1	...	...	...	...	...	...	...	...	...	...	...	...
...	1	...	...	...	...	...	...	...	...	...	...	...	...
...	...	...	...	...	...	...	1	...	...	...	...	...	...
1	...	...	...	...	1	1	1	1	...	...	...	...	...
1	...	...	...	...	...	1	...	1	...	...	...	...	...
1	...	...	...	...	...	1	...	1	...	...	...	...	...
...	...	...	...	...	1	1	1	1	...	...	...	...	...
1	...	...	...	...	...	...	...	...	...	...	...	...	...
1	...	...	...	...	1	1	...	1	...	...	...	...	...

38407
Equip.
1565

Digitized by Google

B.L. Carriages—Component

Articles.	Garrison.	12-inch. Mark I.	10-inch. Disappearing. Mark II.	10-inch. Barbette. Mark I. C.	10-inch. Barbette. Mark I. D.	10-inch. Barbette. Mark II.	10-inch. Barbette. Mark III.
Links, connecting levers, 1st and 2nd motion shafts ...	...	1	...	...	...	...	...
Pipes, copper, { delivery	...	1	...	...	...	...	...
with fittings { suction	...	1	...	...	...	...	...
Pump, lowering, complete	...	1	...	...	...	...	...
Pump, parts of: boxes, stuffing, metal	...	1	...	...	...	...	...
glands	...	2	...	...	...	...	...
packing, cotton, { length of 45″ ... lengths	...	...	...	...	...	...	...
plaited, ⅜″ square { „ „ 75″ ... „	...	1	...	...	...	...	...
plugs { guide, valves	...	2	...	...	...	...	...
plugs { stopping holes	...	2	...	...	...	...	...
body, without fittings	...	1	...	...	...	...	...
rings, packing, gland (metal)	...	1	...	...	...	...	...
rods, metal { guide, plunger	...	1	...	...	...	...	...
rods, metal { plunger	...	1	...	...	...	...	...
springs, valve, P. B. { delivery	...	2	...	...	...	...	...
springs, valve, P. B. { suction	...	2	...	...	...	...	...
valves, metal { delivery	...	2	...	...	...	...	...
valves, metal { suction	...	2	...	...	...	...	...
washers, packing (lead) { pump { set of 3 ... ... sets	...	...	...	...	...	...	...
washers, packing (lead) { pump { „ 5 ... ... „	...	1	...	...	...	...	...
washers, packing (lead) { pipes, delivery and suction, set of 4 sets	...	1	...	...	...	...	...
Shafts, cross: with collar and keys (split and driving) ...	...	...	...	...	...	...	...
1st motion { with keys	...	...	...	...	...	...	...
1st motion { with keys	...	1	...	...	...	...	...
2nd „ { with keys	...	...	...	...	...	...	...
2nd „ { with keys	...	1	...	...	...	...	...
Stops, handle: { front	...	1	...	...	...	...	...
Stops, handle: { rear	...	1	...	...	...	...	...
GEAR, RAISING, VALVE.							
Boxes, stuffing, P.B.	...	1	...	...	...	...	...
Chain-checks, { cut off gear, with nuts, pins and iron { shackles	...	1	...	...	...	...	...
Glands, valve, raising, metal	...	1	...	...	...	...	...
Guards, sheave, cut off gear, iron, with screws ...	...	...	...	...	...	...	...
Lanyards, lever, cut off gear, copper, wire rope...	...	...	...	...	...	...	...
Levers: link, connecting { iron, with pin, collar, and key ... ... { left ...	...	1	...	...	...	...	...
Levers: link, connecting { iron, with pin, collar, and key ... ... { right ...	...	1	...	...	...	...	...
Levers: link, connecting { with pin, chain, lock and key ...	...	...	...	...	...	...	...
Levers: hand, shaft, cross, iron	...	1	...	...	...	...	...
Levers: valve, spindle, with pin, sheave, collar and key ...	...	...	...	...	...	...	...
Links, connecting, iron	...	1	...	...	...	...	...
Packing for gland { — ... ... ozs.	...	...	...	...	...	...	...
Packing for gland { length of 15 inches ... lengths	...	...	...	...	...	...	...
Packing for gland { „ 32 „ ... „	...	1	...	...	...	...	...

¶ *See* note ¶ page 476.
† Per 10 guns or less, 6-inch only, per Sub-District.
Per carriage.

Digitized by Google

and Spare Parts for—*continued.*

9·2-inch.				8-inch.	6-inch. Disappearing				6-inch.		5-inch.	4-inch.	Proportion of Spare.
Disappearing.		Barbette.		Barbette.	Marks IV. & VI. guns.		Mark V. gun.						
Mark I.	Mark II.	Mark I. and Ia.¶	Mark II.	Mark I.	Mark II. and II.*	Mark IV.	Mark I.	Mark III.	Vavasseur Central Pivot.	Barbette Central Pivot.	Travelling, 6-ft. parapet.	Travelling, 6-ft. parapet.	For or Battery. Per 10 guns, or less No. of each nature.
1	...	...	...	...	...	1	...	1	...	...	...	...	...
1	...	...	...	...	1	1	1	1	...	...	...	...	1
1	...	...	...	...	1	1	1	1	...	...	...	...	1
1	...	...	...	...	1	1	1	1	...	...	...	...	1¶
1	...	...	...	...	1	1	...	1	...	...	...	...	...
2	...	...	...	...	2	2	2	2	...	...	...	...	...
...	...	...	...	...	1	1	1	1	...	...	...	...	1‡
1	...	...	...	...	...	...	...	...	...	...	...	...	1‡
2	...	...	...	...	2	2	1	2	...	...	...	...	...
2	...	...	...	...	2	2	1	2	...	...	...	...	...
1	...	...	...	...	1	1	1	1	...	...	...	...	...
1	...	...	...	...	1	1	1	1	...	...	...	...	...
1	...	...	...	...	1	1	1	1	...	...	...	...	...
1	...	...	...	...	1	1	1	1	...	...	...	...	...
2	...	...	...	...	2	2	2	2	...	...	...	...	2‡
2	...	...	...	...	2	2	2	2	...	...	...	...	2‡
2	...	...	...	...	2	2	2	2	...	...	...	...	1
2	...	...	...	...	2	2	2	2	...	...	...	...	1
...	...	...	...	...	...	...	1	...	...	...	...	...	§
1	...	...	...	...	1	1	...	1	...	...	...	...	§
1	...	...	...	...	1	1	1	1	...	...	...	...	§
...	...	...	...	...	1	...	...	...	...	...	...	...	1
...	...	...	...	...	...	1	...	1	...	...	...	...	1
1	...	...	...	...	...	...	...	...	...	...	...	...	1
...	...	...	...	...	...	1	...	1	...	...	...	...	...
1	...	...	...	...	...	...	...	...	...	...	...	...	1
1	...	...	...	...	...	...	...	...	...	...	...	...	...
1	...	...	...	...	...	...	...	...	...	...	...	...	...
1	...	...	...	...	1	1	...	1	...	...	...	...	1†
1	...	...	...	...	1	1	...	1	...	...	...	...	...
1	...	...	...	...	1	1	1	1	...	...	...	...	...
...	...	...	...	...	...	...	3	...	...	...	...	...	...
...	...	...	...	...	...	...	1	...	...	...	...	...	1
1	...	...	...	...	1	1	...	1	...	...	...	...	...
1	...	...	...	...	1	1	...	1	...	...	...	...	...
...	...	...	...	...	...	...	1	...	...	...	...	...	...
1	...	...	...	...	1	1	...	1	...	...	...	...	...
...	...	...	...	...	...	...	1	...	...	...	...	...	...
1	...	...	...	...	1	1	1	1	...	...	...	...	...
...	...	...	...	...	...	...	8	...	...	...	...	...	8†
...	...	...	...	...	1	1	...	1	...	...	...	...	1‡
1	...	...	...	...	...	...	...	...	...	...	...	...	1‡

57
Malta
7966

§ In putting forward requisitions, the lead of section, 4-in. × 2-in. should be demanded by the foot run, and made into washers locally.

‖ Per Sub-district of 10 guns or less—number of each nature.

Digitized by Google

B.L. Carriages—Component

Articles.	12-inch.	10-inch.					
		Disappearing.		Barbette.			
	Garrison.	Mark I.	Mark II.	Mark I. C.	Mark I. D.	Mark II.	Mark III.
Pinions, spur, metal, { 40 teeth ... ... with nuts ... ... { 48 „	...	1	...	...	...	...	...
Plates, cover, iron, with screws	...	...	...	...	...	...	...
Rings, packing, valve raising, metal	...	1	...	...	...	...	...
Racks, iron, with pin collar and split key... ...	...	1	...	...	...	...	...
Shafts, cross, iron { with collar and keys	...	...	...	...	...	...	...
with keys	...	1	...	...	...	...	...
Sheaves, metal, cut off gear	...	...	...	...	...	...	...
Spindles, with valve, nut, and split key, metal ...	...	1	...	...	...	...	...
Studs, iron, cut off { lanyard... ... ... gear.. ... ... { sheave	...	...	...	...	...	...	...
GEAR, SIGHTING.							
Bars, radius, step, sighting { left ... ... right	...	1	...	...	...	...	...
	...	1	...	...	...	...	...
Brackets, with bolts or screws — bearing shaft counterweight, step sighting, automatic release gear { left	...	...	...	...	...	...	...
right	...	...	...	...	...	...	...
radius — bar, step, sighting { left	...	1	...	...	...	...	...
right	...	1	...	...	...	...	...
radius — frame, step, sighting { left	...	4	...	...	...	...	...
right	...	4	...	...	...	...	...
shaft, step, sighting ... ... { left	...	...	...	...	...	...	...
right	...	...	...	...	...	...	...
supporting, step, sighting ... { left	...	...	...	...	...	...	...
right	...	...	...	...	...	...	...
Counterweight, cast iron, with lever step sighting, automatic release gear	...	...	...	...	...	...	...
Frames, radius, steel, step sighting { left...	...	1	...	...	...	...	...
right	...	1	...	...	...	...	...
Hooks — spring, step sighting {	...	...	...	...	...	...	...
with nuts ...	...	4	...	...	...	...	...
with collar and nut...	...	...	...	...	...	...	...
stop, connecting rod, with taper pin	...	4	...	...	...	...	...
Guides, round, ladder, rear, with screws { left... ...	...	...	...	...	...	...	...
right ...	...	...	...	...	...	...	...
Ladders, sighting, with screws — front	...	1	...	...	...	...	...
rear { — ...	...	1	...	...	...	...	...
rear { left ...	...	...	...	...	...	...	...
rear { right ...	...	...	...	...	...	...	...
Levers, step sighting, with pin, — collars and keys, large	...	...	...	...	...	...	...
collar and key, small ...	...	...	...	...	...	...	...
and key { large	...	...	...	...	...	...	...
and key { small	...	...	...	...	...	...	...
and key { automatic release gear ...	...	...	...	...	...	...	...
nut and taper pin, automatic release gear	...	...	...	...	...	...	...

¶ *See* note ¶ page 476.

Digitized by Google

and Spare Parts for—*continued.*

9·2-inch.				8-inch.	6-inch. Disappearing.				6-inch.		5-inch.	4-inch.	Proportion of Spare.
Disappearing.		Barbette.		Barbette.	Marks IV.& VI. guns.		Mark V. gun.						
Mark I.	Mark II.	Mark I. and Ia.¶	Mark II.	Mark I.	Mark II. and II.*	Mark IV.	Mark I.	Mark III.	Vavasseur Central Pivot.	Barbette Central Pivot.	Travelling, 6-ft. parapet.	Travelling, 6-ft. parapet.	Fort or Battery. Per 10 guns, or less No. of each nature
1	...	...	...	...	...	...	..	...	...	...	...	...	...
...	...	...	...	...	1	1	...	1	...	...	...	...	...
1	...	...	...	...	1	1	...	1	...	...	...	...	...
1	...	...	...	...	1	1	...	1	...	...	...	...	...
1	...	...	...	...	1	1	...	1	...	...	...	...	...
...	...	...	...	...	1	1	...	1	...	...	...	...	...
1	...	...	...	...	...	...	...	...	...	...	...	...	...
...	...	...	...	...	...	...	3	...	...	...	...	...	...
1	...	...	...	...	1	1	1	1	...	...	...	...	1
...	...	...	...	...	...	...	1	...	...	...	...	...	...
...	...	...	...	...	...	...	3	...	...	...	...	...	...
1	...	...	...	...	...	...	...	...	..	...	...	...	...
1	...	...	...	...	...	...	...	...	...	...	...	...	...
...	...	...	...	...	1	...	...	...	...	...	...	...	...
...	...	...	...	...	1	...	...	...	...	...	...	...	...
1	...	...	...	...	...	...	...	...	...	...	...	...	...
1	...	...	...	...	...	...	...	...	...	...	...	...	...
4	...	...	...	...	...	...	...	...	...	...	...	...	...
4	...	...	...	...	...	...	...	...	...	...	...	...	...
...	...	...	...	...	1	1	...	1	...	...	...	...	...
...	...	...	...	...	1	1	...	1	...	...	...	...	...
...	...	...	...	...	1	1	...	1	...	...	...	...	...
...	...	...	...	...	1	1	...	1	...	...	...	...	...
...	...	...	...	...	2	...	...	...	...	...	...	...	...
1	...	...	...	...	...	...	...	...	...	...	...	...	...
1	...	...	...	...	...	...	...	...	...	...	...	...	...
...	...	...	...	...	...	2	...	2	...	...	...	...	1†
4	...	...	...	...	2	...	2	...	...	...	...	...	...
...	...	...	...	...	2	...	...	...	...	...	...	...	1†
4	...	...	...	...	...	...	...	...	...	...	...	...	...
...	...	...	...	...	1	...	...	...	...	...	...	...	...
...	...	...	...	...	1	...	...	...	...	...	...	...	...
1	...	...	...	...	1	1	1	1	...	...	...	...	...
1	...	...	...	...	...	...	1	...	...	...	...	...	..
...	...	...	...	...	1	1	...	1	...	...	...	...	...
...	...	...	...	...	1	1	...	1	...	...	...	...	...
...	...	...	...	...	...	2	...	2	...	...	...	...	...
...	...	...	...	...	...	2	...	2	...	...	...	...	...
...	...	...	...	...	...	...	2	...	...	...	...	...	...
...	...	...	...	...	...	2	...	...	...	...	...	...	...
...	...	...	...	...	2	...	...	...	...	...	...	...	...
...	...	...	...	...	2	...	...	...	...	...	...	...	...

† Per carriage.

Digitized by Google

B.L. Carriages—Component

Articles.	12-inch.	10-inch.					
		Disappearing.		Barbette.			
	Garrison.	Mark I.	Mark II.	Mark I. C.	Mark I. D.	Mark II.	Mark III.
Links, connecting { levers, step { —	...	...	...	...	...	...	...
sighting { automatic release gear ...	...	...	...	...	...	...	...
rounds, rear sighting ladder	...	...	...	...	...	...	...
Pads, buffer, step sighting, india rubber, with collars and screws	...	4	...	...	...	...	..
Pawls, steel, clutch, with clutch collar and set screw, step sighting, automatic release gear { left	...	...	...	...	...	...	...
right	...	...	...	...	...	...	...
Pins { radius bar, with nut and split key	...	2	...	...	...	...	...
with collars and keys { brackets, radius frame	...	4	...	...	...	...	...
foot plate { long ...	...	2	...	...	...	...	...
short ...	...	4	...	...	...	...	...
joint connecting rod ...	...	4	...	...	...	...	...
Posts, hand	...	1	...	...	...	...	...
Rods, connecting —	...	4	...	...	...	...	...
levers, step sighting, automatic release gear	...	...	...	...	...	...	...
Rounds, ladder —	...	...	...	...	...	...	...
long	...	...	...	...	...	...	...
short	...	...	...	...	...	...	...
Shaft, step sighting, with collars, feathers and keys { —	...	...	...	...	...	...	...
automatic release gear ...	...	...	...	...	...	...	...
Sights, rough, on shield { front	...	1	...	...	...	...	...
rear	...	1	...	...	...	...	..
with sockets and set screw { front	...	...	...	...	...	...	...
rear	...	...	...	...	...	...	...
Spindles, for rough sights { front	...	...	...	...	...	...	...
rear	...	...	...	...	...	...	...
Springs, spiral, step sighting, steel	...	4	...	...	...	...	...
Slides, iron. grooved for radius bar and support for cover plates { left	...	1	...	...	...	...	...
right	...	1	...	...	...	...	...
Steps, sighting { left	...	1	...	...	...	...	...
right	...	1	...	...	...	...	...
PLATFORM, LANDING AND REAR SIGHTING STEP (SHIELDED MOUNTINGS).							
Brackets, with bolts or screws { supporting, wood platform, landing { inner { left ...	...	...	...	...	...	...	...
right	...	...	...	...	...	...	...
outer	...	...	...	...	...	...	...
supporting, step sighting { left ...	...	...	...	...	...	...	...
right	...	...	...	...	...	...	...
Ladders, platform, landing, with bolts { left ...	...	...	...	...	...	...	...
right ...	...	...	...	...	...	...	...
Lever, step, sighting, with key	...	...	...	...	...	...	...

¶ *See* note ¶ page 476.

Digitized by Google

and Spare Parts for—*continued.*

9·2 inch.				8-inch.	6-inch Disappearing.				6-inch.		5-inch.	4-inch.	Proportion of Spare.
Disappearing.		Barbette.		Barbette.	Marks IV.&VI. guns.		Mark V. gun.		Vavasseur Central Pivot.	Barbette Central Pivot.	Travelling, 6-ft. parapet.	Travelling, 6-ft. parapet.	Fort or Battery. Per 10 guns, or less No. of each nature.
Mark I.	Mark II.	Mark I. and IA.¶	Mark II.	Mark I.	Mark II.* and II.	Mark IV.	Mark I.	Mark III.					
...	...	...	...	...	2	8	4	8	...	...	...	...	...
...	...	...	...	...	2	...	...	...	...	...	...	...	...
...	...	...	...	...	...	...	4	...	...	...	...	...	...
4	...	...	...	...	4	4	...	4	...	...	...	...	...
...	...	...	...	...	1	...	...	...	...	...	...	...	...
...	...	...	...	...	1	...	...	...	...	...	...	...	...
2	...	...	...	...	...	...	...	...	...	...	...	...	...
4	...	...	...	...	...	...	...	...	...	...	...	...	...
2	...	...	...	...	...	...	...	...	...	...	...	...	...
4	...	...	...	...	...	...	...	...	...	...	...	...	...
4	...	...	...	...	...	...	...	...	...	...	...	...	...
1	...	...	...	...	2	2	2	2	...	...	...	...	...
4	...	...	...	...	...	...	...	...	...	...	...	...	...
...	...	...	...	...	2	...	...	...	...	...	...	...	...
...	...	...	...	...	2	...	...	...	...	...	...	...	...
...	...	...	...	...	...	2	2	2	...	...	...	...	...
...	...	...	...	...	...	2	2	2	...	...	...	...	...
...	...	...	...	...	2	2	2	2	...	...	...	...	...
...	...	...	...	...	2	...	...	...	...	...	...	...	...
1	...	...	...	...	1	...	1	...	...	...	...	...	...
1	...	...	...	...	1	...	1	...	...	...	...	...	...
...	...	...	...	...	...	1	...	1	...	...	...	...	...
...	...	...	...	...	...	1	...	1	...	...	...	...	...
...	...	...	...	...	1	...	...	...	...	...	...	...	...
...	...	...	...	...	1	...	...	...	...	...	...	...	...
4	...	...	...	...	2	2	2	2	...	...	...	...	1†
1	...	...	...	...	...	...	...	...	...	...	...	...	...
1	...	...	...	...	...	...	...	...	...	...	...	...	...
1	...	...	...	...	1	1	1	1	...	...	...	...	...
1	...	...	...	...	1	1	1	1	...	...	...	...	...
...	...	...	...	...	1	1	1	1	...	...	...	...	...
...	...	...	...	...	1	1	1	1	...	...	...	...	...
...	...	...	...	...	2	2	2	2	...	...	...	...	...
...	...	...	...	...	1	1	1	1	...	...	...	...	...
...	...	...	...	...	1	1	1	1	...	...	...	...	...
...	...	...	...	...	1	1	1	1	...	...	...	...	...
...	...	...	...	...	1	1	1	1	...	...	...	...	...

† Per carriage.

Digitized by Google

B.L. Carriages—Component

Articles.	12-inch.	10-inch.					
		Disappearing.	Barbette.				
	Garrison.	Mark I.	Mark II.	Mark I. C.	Mark I. D.	Mark II.	Mark III.
Plate, loop, securing, step sighting, with links ...	...	...	...	...	...	...	...
Platforms, wood (in two pieces) { left ...	...	...	...	...	...	...	...
Platforms, wood (in two pieces) { right ...	...	...	...	...	...	...	...
Rails, hand, with bolts...	...	...	...	...	...	...	...
Shaft, step sighting, with collar, feathers, and key	...	...	...	...	...	...	...
Stays, with bolts — ladders, platform landing (in two pieces) ... ... { left	...	...	...	...	...	...	...
Stays, with bolts — ladders, platform landing (in two pieces) ... ... { right	...	...	...	...	...	...	...
Stays, with bolts — platform, inside { left ...	...	...	...	...	...	...	...
Stays, with bolts — platform, inside { right ...	...	...	...	...	...	...	...
Stays, with bolts — platform, landing, outside { left ...	...	...	...	...	...	...	...
Stays, with bolts — platform, landing, outside { right ...	...	...	...	...	...	...	...
Stays, with bolts — steps, intermediate	...	...	...	...	...	...	...
Steps { intermediate (in two pieces)	...	...	...	...	...	...	...
Steps { sighting	...	...	...	...	...	...	...
GEAR, TRAVERSING.							
Blocks, disconnecting, with handle	...	...	...	2	...	...	...
Covers, iron, with screws	...	...	...	2	..	...	...
Guards, iron, pinion, spindle, with screws ...	...	...	...	...	...	...	...
Handles, crank	...	...	...	2	...	...	...
Pinions — bevel — 1st motion, with key, 12 teeth	...	...	...	...	...	...	...
Pinions — bevel — 1st motion shaft { 13 teeth ...	...	...	...	...	...	...	...
Pinions — bevel — 1st motion shaft { 14 ,, ...	...	...	2	...	...	...	...
Pinions — bevel — crank handle	...	...	...	2	...	...	...
Pinions — bevel — shaft, diagonal	...	...	...	2	...	...	...
Pinions — spurs — shaft, diagonal	...	...	...	2	...	...	...
Pinions — spurs — spindle { 2nd motion	...	...	...	2	...	...	...
Pinions — spurs — spindle { 3rd ,, ...	...	...	...	2	...	...	...
Pinions — spurs — with spindle and key	...	...	...	...	...	...	...
Pinions — spurs — 2nd motion, with nut and key { 12 teeth ...	...	...	...	...	...	...	...
Pinions — spurs — 2nd motion, shaft, 12 teeth ...	...	...	2	...	...	...	...
Pinions — spurs — 3rd motion, shaft { 12 teeth ...	...	...	2	...	...	...	...
Pinions — spurs — 3rd motion, shaft { 13 ,, ...	...	...	...	...	...	...	...
Shafts — diagonal	...	...	...	2	...	...	...
Shafts — 1st motion { with keys	...	...	...	...	...	...	...
Shafts — 1st motion { ,, ,, collars and pins ...	...	...	2	...	...	...	...
Shafts — 2nd motion { with collar, key, and screw	...	...	...	...	...	...	...
Shafts — 2nd motion { ,, keys, collars, and pins	...	...	2	...	...	...	...
Shafts — 3rd motion, with keys, collars, and pins	...	...	2	...	...	...	...
Spindles, steel, with collars and keys { 2nd motion	...	...	...	2	...	...	...
Spindles, steel, with collars and keys { 3rd ,, ...	...	...	...	2	...	...	...

¶ *See* note ¶ page 476.

Digitized by Google

and Spare Parts for—*continued.*

9·2-inch.				8-inch.	6-inch. Disappearing.				6-inch.		5-inch.	4-inch.	Proportion of Spare.
Disappearing.		Barbette.		Barbette.	Marks IV. & VI. guns.		Mark V. gun.						
Mark I.	Mark II.	Mark I. and IA.¶	Mark II.	Mark I.	Mark II. and II.*	Mark IV.	Mark I.	Mark III.	Vavasseur Central Pivot.	Barbette Central Pivot.	Travelling, 6-ft. parapet.	Travelling, 6-ft. parapet.	Fort or Battery. Per 10 guns, or less No. of each nature.
...	...	...	...	...	1	1	1	1	...	...	...	...	...
...	...	...	...	...	1	1	1	1	...	...	...	...	...
...	...	...	...	...	1	1	1	1	...	...	...	...	...
...	...	...	...	...	2	2	2	2	...	...	...	...	...
...	...	...	...	...	1	1	1	1	...	...	...	...	...
...	...	...	...	...	1	1	1	1	...	...	...	...	...
...	...	...	...	...	1	1	1	1	...	...	...	...	...
...	...	...	...	...	1	1	1	1	...	...	...	...	...
...	...	...	...	...	1	1	1	1	...	...	...	...	...
...	...	...	...	...	1	1	1	1	...	...	...	...	...
...	...	...	...	...	2	2	2	2	...	...	...	...	...
...	...	...	...	...	1	1	1	1	...	...	...	...	...
...	2	...	...	...	...	...	...	...	...	...	...	...	...
...	2	...	...	...	...	...	4	...	...	...	...	...	...
...	2	...	...	...	2	...	...	...	...	...	...	...	...
...	...	...	...	...	...	2	...	2	...	...	...	...	...
...	2	...	...	...	...	...	...	...

B.L. Carriages—Component

Articles.	12-inch.	10-inch.					
		Disappearing.	Barbette.				
	Garrison.	Mark I.	Mark II.	Mark I. C.	Mark I. D.	Mark II.	Mark III.
Wheels bevel, 2nd motion, shaft { 36 teeth	...	...	...	...	...	...	...
Wheels bevel, 2nd motion, shaft { 40 ,, ...	...	2	...	...	...	...	...
Wheels iron, hand	...	...	...	...	...	...	...
Wheels ,, ,, with handle	...	2	...	...	...	...	...
Wheels mitre, 25 teeth { 1st motion shaft ...	...	...	...	...	...	...	...
Wheels mitre, 25 teeth { 2nd ,, ,, ...	...	...	...	...	...	...	...
Wheels spur { 2nd motion	...	...	2	...	...	...	...
Wheels spur { 3rd motion { shaft, 40 teeth ...	...	...	2	...	...	...	...
Wheels spur { 3rd motion { ,, 54 ,, ...	...	2	...	...	...	...	...
Wheels spur	...	...	...	...	...	...	...
PUMPS.							
Covers, iron, with screws	...	...	4	...	...	...	...
Levers, clutch { left	...	...	2	...	...	...	...
Levers, clutch { right	...	...	2	...	...	...	...
Pinions { clutch (set of 3) ... ... sets	...	...	4	...	...	...	...
Pinions { spur (set of 3) ... ... ,,	...	...	...	...	...	...	...
Pipes, copper, with { delivery...	...	...	2	...	...	...	...
connections ... { suction	...	...	1	...	...	...	...
Plungers, with rod, { air (set of 2) ... ... sets	...	...	1	...	...	...	...
pump ... ... { water	...	...	...	...	...	...	...
Pumps { air	...	...	1	...	...	...	...
Pumps { water	...	...	1	...	...	...	...
Rings, leather, cup shape (set of 7) ... ... sets	...	...	1	...	...	...	...
Shafts { crank	...	...	2	...	...	...	...
Shafts { cross	...	...	2	...	...	...	...
Spindles, connecting, valve, suction	...	...	2	...	...	...	...
Tubes, india-rubber, suction, with coupling	...	...	1	...	...	...	...
Valves { air	...	...	...	...	...	...	...
Valves { suction, with hand wheel and connection ...	...	...	2	...	...	...	...
Valves { water	...	...	...	...	...	...	...
Wheels { hand, with handles	...	...	2	...	...	...	...
Wheels { spur	...	...	4	...	...	...	...
Washers, packing, leather (set of 18) ... ... sets	...	...	1	...	...	...	...
TACKLE, LOADING.							
Arcs, angle, steel, bar, radial	...	1	...	...	...	...	...
Bars, radial, steel	...	1	...	...	...	...	...
Blocks, metal { with fall	...	1	...	...	...	...	...
Blocks, metal { sliding	...	1	...	...	...	...	...
Bolts, iron, bar, radial	...	1	...	...	...	...	...
Brackets, steel pivot, with bolts	...	1	...	...	...	...	...
Plates, metal, bar radial	...	1	...	...	...	...	...

¶ *See* note ¶ page 476.

Digitized by Google

and Spare Parts for—*continued.*

9·2-inch.				8-inch.	6-inch Disappearing.				6-inch.		5-inch.	4-inch.	Proportion of Spare.
Disappearing.		Barbette.		Barbette.	Marks IV. & VI. guns.		Mark V. gun.		Vavasseur Central Pivot.	Barbette Central Pivot.	Travelling, 6-ft. parapet.	Travelling, 6-ft. parapet.	Fort or Battery. Per 10 guns or less No. of each nature.
Mark I.	Mark II.	Mark I. and IA.¶	Mark II.	Mark I.	Mark II. and II.*	Mark IV.	Mark I.	Mark III.					
...	...	...	...	...	2	2	...	2	...	...	...	...	...
...	...	...	...	...	...	...	...	...	...	...	...	...	...
...	...	...	...	...	2	2	4	2	...	...	...	...	...
2	...	...	...	...	...	...	...	...	...	...	...	...	...
2	...	...	...	...	...	...	...	...	...	...	...	...	...
2	...	...	...	...	...	...	...	...	...	...	...	...	...
...	2	...	...	...	...	...	...	...	...	...	...	...	...
...	2	...	...	...	...	...	...	...	...	...	...	...	...
2	...	...	...	...	...	...	...	...	...	...	...	...	...
...	...	...	...	...	...	...	...	...	...	...	...	...	...
...	...	...	...	...	...	...	4	...	...	...	...	...	...
...	4	...	...	...	...	...	...	...	...	...	...	...	...
...	2	...	...	...	...	...	...	...	...	...	...	...	...
...	2	...	...	...	...	...	...	...	...	...	...	...	...
...	4	...	...	...	...	...	...	...	...	...	...	...	1 set
...	...	...	...	...	...	...	...	...	...	...	...	...	1 set
...	2	...	...	...	...	...	...	...	...	...	...	...	...
...	1	...	...	...	...	...	...	...	...	...	...	...	...
...	1	...	...	...	...	...	...	...	...	...	...	...	1 set
...	...	...	...	...	...	...	...	...	...	...	...	...	1
...	1	...	...	...	...	...	...	...	...	...	...	...	...
...	1	...	...	...	...	...	...	...	...	...	...	...	...
...	1	...	...	...	...	...	...	...	...	...	...	...	2†
...	2	...	...	...	...	...	...	...	...	...	...	...	...
...	2	...	...	...	...	...	...	...	...	...	...	...	...
...	2	...	...	...	...	...	...	...	...	...	...	...	1
...	1	...	...	...	...	...	...	...	...	...	...	...	1
...	...	...	...	...	...	...	...	...	...	...	...	...	1 set†
...	2	...	...	...	...	...	...	...	...	...	...	...	...
...	...	...	...	...	...	...	...	...	...	...	...	...	1 set†
...	2	...	...	...	...	...	...	...	...	...	...	...	...
...	4	...	...	...	...	...	...	...	...	...	...	...	...
...	1	...	...	...	...	...	...	...	...	...	...	...	2‡
1	...	...	...	...	...	...	...	...	...	...	...	...	...
1	...	...	...	...	...	...	...	...	...	...	...	...	...
1	...	...	...	...	...	...	...	...	...	...	...	...	...
1	...	...	...	...	...	...	...	...	...	...	...	...	...
1	...	...	...	...	...	...	...	...	...	...	...	...	...
1	...	...	...	...	...	...	...	...	...	...	...	...	...
1	...	...	...	...	...	...	...	...	...	...	...	...	...

† For 10-inch and 9·2-inch, disappearing, Mark II. mountings. ‡ Per carriage.

Digitized by Google

B.L. Carriages—Component

Articles.	12-inch.	10-inch.					
		Disappearing.		Barbette.			
	Garrison.	Mark I.	Mark II.	Mark I.		Mark II.	Mark III.
				C.	D.		
SHIELD.							
Pins, stay — with key — and nut, long	...	...	...	...	...	...	...
Pins, stay — with key — short	...	...	...	...	...	...	...
Pins, stay — steel, with nuts and — long	...	...	...	2	4	...	...
Pins, stay — split key — short	...	...	...	2	2	...	...
Pins, stay — do. do. do. — small	...	...	...	...	14	...	...
Screws, iron, bracket, shield	...	...	...	...	...	...	...
Shields, steel, with bolts	...	...	...	1	1	...	...
Stays, shield, steel	...	...	...	2	8	...	...
PUMP, RUNNING BACK.							
Boxes, metal, stuffing, valve release	...	...	...	...	...	1	1
Bearings, metal — shaft, crank	...	...	...	1	1	1	1
Bearings, metal — sliding, plunger	...	...	...	1	1	1	1
Bushes, metal, cistern, shaft crank	...	...	...	...	...	1	1
Casings, metal — front	...	...	...	1	1	1	1
Casings, metal — rear	...	...	...	1	1	1	1
Cisterns, cast-iron	...	...	...	1	1	1	1
Covers, ,,	...	...	...	1	1	1	1
Glands, metal, plunger	...	...	...	2	2	2	2
Levers, double handed	...	...	...	...	...	...	1
Nuts, metal — securing pump	...	...	...	1	1	1	1
Nuts, metal — spindle, valve release	...	...	...	1	1	1	1
Plungers, metal	...	...	...	1	1	1	1
Pipes, copper, — connecting pump	...	...	...	1	1	1	1
Pipes, copper, with fittings — release	...	...	...	1	1	1	1
Plugs, metal — air	...	...	...	2	2	2	2
Plugs, metal — retaining pump	...	...	...	2	2	2	2
Plugs, metal — strainer, valve suction	...	...	...	2	2	2	2
Plugs, metal — valve, delivery	...	...	...	2	2	2	2
Plugs, metal — ,, suction	...	...	...	2	2	2	2
Packing, for pump (length of 50 inches)	lengths	...	...	1	1	1	1
Shafts, steel, crank	...	...	...	1	1	1	1
Spindles, metal, valve, release	...	...	...	1	1	1	1
Stops, wrought-iron pump	...	...	...	1	1	...	...
Studs, wrought-iron cistern	...	...	...	8	8	8	8
Strainers, copper, valve suction	...	...	...	2	2	2	2
Springs, spiral — P.B., valve, suction	...	...	...	2	2	2	2
Springs, spiral — steel, valve, delivery	...	...	...	2	2	2	2

¶ *See* notes ¶ page 476.

Digitized by Google

and Spare Parts for—*continued.*

9·2 inch.				8-inch.	6-inch Disappearing.				6-inch.		5-inch.	4-inch	Proportion of Spare.
Disappearing		Barbette.		Barbette.	Marks IV. & VI. guns.		Mark V. gun.						
Mark I.	Mark II.	Mark I. and IA.	Mark II.	Mark I.	Mark II. and II.*	Mark IV.	Mark I.	Mark III.	Vavasseur Central Pivot.	Barbette Central Pivot.	Travelling, 6-ft. parapet.	Travelling, 8-ft. parapet.	Port or Battery per 10 guns, or less No. of each nature.
...	...	...	...	2	...	...	...	...	...	...	...	...	...
...	...	...	...	2	...	...	...	...	...	...	...	...	...
...	...	2	...	...	...	...	...	...	...	2	...	...	...
...	...	2	...	...	...	...	...	...	...	2	...	...	...
...	...	...	...	...	...	...	...	...	...	...	...	...	...
...	...	...	...	...	...	...	...	...	...	12	...	...	...
...	...	1*	...	1	...	...	...	...	...	1	...	...	...
...	...	2	...	2	...	...	...	...	...	2	...	...	...
...	...	...	1	...	...	...	...	...	...	...	...	...	...
...	...	1	1	...	...	...	...	...	...	...	...	...	...
...	...	1	1	...	...	...	...	...	...	...	...	...	...
...	...	...	1	...	...	...	...	...	...	...	...	...	...
...	...	1	1	...	...	...	...	...	...	...	...	...	...
...	...	1	1	...	...	...	...	...	...	...	...	...	...
...	...	1	1	...	...	...	...	...	...	...	...	...	...
...	...	2	2	...	...	...	...	...	...	...	...	...	...
...	...	...	...	...	...	...	...	...	...	...	...	...	...
...	...	1	1	...	...	...	...	...	...	...	...	...	...
...	...	1	1	...	...	...	...	...	...	...	...	...	...
...	...	1	1	...	...	...	...	...	...	...	...	...	...
...	...	1*	1	...	...	...	...	...	...	...	...	...	1
...	...	1	1	...	...	...	...	...	...	...	...	...	...
...	...	2	2	...	...	...	...	...	...	...	...	...	...
...	...	2	2	...	...	...	...	...	...	...	...	...	...
...	...	2	2	...	...	...	...	...	...	...	...	...	...
...	...	2	2	...	...	...	...	...	...	...	...	...	...
...	...	2	2	...	...	...	...	...	...	...	...	...	...
...	...	1	1	...	...	...	...	...	...	...	...	...	1†
...	...	1	1	...	...	...	...	...	...	...	...	...	...
...	...	1	...	...	...	...	...	...	...	...	...	...	...
...	...	8	8	...	...	...	...	...	...	...	...	...	...
...	...	2	2	...	...	...	...	...	...	...	...	...	...
...	...	2	2	...	...	...	...	...	...	...	...	...	...
...	...	2	2	...	...	...	...	...	...	...	...	...	2

† Per carriage.

Digitized by Google

B.L. Carriages—Component

Articles	12-inch.	10-inch.					
		Disappearing.		Barbette.			
	Garrison.	Mark I.	Mark II.	Mark I.		Mark II.	Mark III.
				C.	D.		
Valves, metal { delivery	...	...	...	2	2	2	2
draw off	...	...	...	1	1	1	1
suction	...	...	...	2	2	2	2
Washers, packing, leather { set of 16 sets	...	...	...	1	1	...	...
,, 18	...	...	...	...	...	1	1
Wheels, metal, hand spindle, valve release	...	...	...	1	1	1	1
Unions, metal, connecting pipe, copper, release	...	...	...	...	...	1	1
RACER, WITH RACK.							
Bolts, holding down, iron, with nuts { inner	...	24	...	...	...	...	...
outer	...	48	...	...	...	...	...
Plates, holding down, cast steel { —	...	...	...	...	...	...	...
inner	...	12	...	...	...	...	...
outer	...	12	...	...	...	...	...
Racks, traversing, steel, with screws	...	1	...	...	...	...	...
Racers { steel, with bolts	...	1	...	...	...	...	...
" "	...	...	...	...	...	...	...

¶ *See* note ¶ page 476.

Digitized by Google

and Spare Parts for—*continued.*

9·2-inch.				8-inch.	6-inch Disappearing.				6-inch.		5-inch.	4-inch.	Proportion of Spare.
Disappearing.		Barbette.		Barbette.	Marks IV.& VI. guns.		Mark V. gun.		Vavasseur Central Pivot.	Barbette Central Pivot.	Travelling 6-ft. parapet.	Travelling 6-ft. parapet.	For Battery. Per 10 guns or less No. of each nature.
Mark I.	Mark II.	Mark I. and IA.¶	Mark II.	Mark I.	Mark II.* and II.*	Mark IV.	Mark I.	Mark III.					
...	...	2	2	...	...	...	...	...	...	...	...	...	1
...	...	1	1	...	...	...	...	...	...	...	...	...	1
...	...	2	2	...	...	...	...	...	...	...	...	...	1
...	...	1	...	...	...	...	...	...	...	...	...	...	2†
...	...	...	1	...	...	...	...	...	...	...	...	...	2†
...	...	1	1	...	...	...	...	...	...	...	...	...	...
...	...	...	1	...	...	...	...	...	...	...	...	...	...
20	...	...	...	...	15	15	...	15	...	...	...	...	...
40	...	...	...	...	30	30	...	30	...	...	...	...	...
...	...	...	...	...	5	5	...	5	...	...	...	...	...
10	...	...	...	...	...	...	...	...	...	...	...	...	...
10	...	...	...	...	...	...	...	...	...	...	...	...	...
1	...	...	...	...	1	1	...	1	...	...	...	...	...
1	...	...	...	...	...	...	...	...	...	...	...	...	...
...	...	...	...	...	1	1	...	1	...	...	...	...	...

† Per carriage.

Digitized by Google

SLIDES L, B.L.—COMPONENT AND SPARE PARTS FOR (12-INCH TO 6-INCH).

Articles.			12-inch Garrison.		10-inch barbette.			9·2-inch barbette		8-inch.	6-inch.		Spare.
			Upper tier.	Lower tier.	Mark I. "C" pivot.	Mark I. "D" pivot.	Mark II.	Mark III.	Mark I. and Ia.*	Mark II.	Barbette.	Vavasseur central pivot.	Barbette.	Port or Battery per 10 guns or less No. of each nature.
Axles	roller	rear, with nuts	...	...	...	...	...	...	...	...	2	24	30	1
		manganese, bronze	...	...	...	...	4	...	...	4	...	...	...	1
	truck, steel	with collar, and pins	—	...	...	...	...	...	...	...	...	...	...	1
			front	2	2	2	...	...	2	...	...	...	...	1
			rear	2	2	2	...	...	2	...	...	...	...	1
		with nuts, and split keys	front	...	...	...	...	...	...	...	...	...	...	1
			rear	...	...	...	...	2	...	...	...	...	...	1
Bearings	axle drum, brake gear, cast iron, with bolts		...	2	2	...	...	...	...	...	...	...	...	...
		with set screw, rear screw, brake	...	2	2	...	...	...	...	...	...	...	...	...
	metal, elevating, gear, with bolts or screws	shaft	1st motion	left	2	2	1	...	...	1	...	...	...	...
				right	...	...	1	...	...	1	...	...	...	...
			2nd ,,	front	...	...	...	2	...	...	...	...	...	...
				rear	...	...	...	1	...	...	...	...	...	...
			3rd ,,	—	2	1	1	...	...	1	...	...	...	...
			4th ,,	...	...	...	...	...	...	...	...	...	...	...
		spindle, 1st ,,	...	...	...	...	...	1	...	...	...	...	...	...

Digitized by Google

| | | |

Slides L., B.L.—Component and Spare Parts for (12-inch to 6-inch)—*continued.*

Articles.			12-inch Garrison.		10-inch barbette.				9·2-inch barbette		8-inch.	6-inch.		Spare.
			Upper tier.	Lower tier.	Mark I. "C" pivot.	Mark I. "D" pivot.	Mark II.	Mark III.	Mark I. and IA.*	Mark II.	Barbette.	Barbette.	Vavasseur central pivot.	Fort or Battery per 10 guns or less No. of each nature.
Brackets iron, with bolts or screws	supporting	bracket, pointer	...	...	...	...	...	...	1	...	1	...	...	...
		derrick, cartridge	...	...	...	...	...	1	1	...	...	...	...	...
		pump lever front	...	...	...	...	...	1	...	...	...	...	...	...
		pump lever rear	...	...	...	...	...	1	...	...	...	...	...	...
		rammer	...	...	...	...	...	2	...	...	...	...	...	...
		step, stage, loading front	...	...	...	...	...	1	...	...	...	...	...	...
		step, stage, loading rear	...	...	...	...	...	1	...	...	...	...	...	...
		yoke left	1	1	...	...	1	...	...	1	...	...	...	...
		yoke right	1	1	...	...	1	...	...	1	...	...	...	...
		1st motion	...	...	...	...	1	...	...	1	...	...	...	...
		2nd ,, front	...	...	...	...	1	...	...	1	...	...	...	...
		2nd ,, rear	...	...	...	...	2	...	...	2	...	...	...	...
	iron, with bolts or screws, traversing, gear, shaft	3rd ,, front	...	...	...	...	...	1	...	1	...	...	...	...
		3rd ,, rear	...	...	...	...	1	...	...	1	...	...	...	...
		3rd ,, rear left	...	...	...	...	1	...	...	1	...	...	...	...
		3rd ,, rear right	...	...	...	...	1	...	...	1	...	...	...	...
		4th ,, rear left	...	...	...	...	...	1	...	1	...	...	...	...
		4th ,, rear right	...	...	...	...	...	1	...	1	...	...	...	...
		4th ,, left	...	...	...	...	...	1	...	...	...	...	...	...
		4th ,, right	...	...	...	...	...	1	...	...	...	...	...	...
	iron, stage, loading	...	...	...	...	...	...	4	...	...	...	...	...	...
	M.C.I., or steel, with bolts or screws	brake, gear, loading	...	...	...	...	...	1	...	...	...	...	...	...
		derrick, loading lower	...	...	...	...	...	1	...	...	...	...	...	...
		derrick, loading upper	...	...	...	...	...	1	...	...	...	...	...	...

Digitized by Google

Brackets

metal, with bolts or screws

| | | |

Slides L, B.L.—Component and Spare Parts for (12-inch to 6-inch)—*continued.*

Articles.	12-inch Garrison.		10-inch barbette.				9·2 inch barbette		8-inch.	6-inch.		Spare.
	Upper tier.	Lower tier.	Mark I. "O" pivot.	Mark I. "D" pivot.	Mark II.	Mark III.	Mark I. and IA.*	Mark II.	Barrette.	Vavasseur central pivot.	Barbette.	Fort or Battery per 10 guns or less No. of each nature.
Brackets { spindle, buffer	...	...	...	...	...	...	...	...	4	...	...	...
meral, with bolts or screws, traversin { centre	...	1	...	...	...	...	...	...	...	...	...	...
gear shaft, traversing ... { front	1	1	...	...	...	...	...	...	1	...	...	...
{ rear	1	1	...	...	...	...	...	...	1	...	...	...
angle, stage, loading { left	...	...	...	...	...	...	...	...	1	...	...	...
{ right	...	...	...	...	...	...	...	...	1	...	...	...
steel, with bolts { bar, elevating { left ...	...	...	...	...	1	...	...	1	...	...	...	...
{ right	...	...	...	...	1	...	...	1	...	...	...	...
or screws ... { buffer	...	...	2	2	...	...	1	...	1	1	...	...
{ guide, joint tripper { front	...	...	1	1	...	...	1	...	1	...	1	...
{ rear	...	...	1	1	...	...	1	...	1	...	1	...
Bush, metal, pivoting slide, with bush	...	...	...	...	...	...	...	...	1	1	...	...
Bushes, metal, shaft, { in girders	...	...	...	...	...	...	...	...	...	2	...	...
training { in transom	...	...	...	...	...	...	...	...	...	2	...	...
Buffers front, consisting of { 2 spindles and keys, with disc springs ...	...	...	...	...	1	...	...	1	...	...	2	...
front, including { 2 brackets, 2 springs, 2 spindles, with nut and pin	...	...	...	...	...	1	...	...	...	...	...	...
hydraulic, preventing, jump	...	...	...	...	1	...	...	...	...	...	...	...

Digitized by Google

| | | |

Slides L, B.L.—Component and Spare Parts for (12-inch to 6-inch)—*continued.*

Articles.	12-inch Garrison.		10-inch barbette.				9·2-inch barbette.			8-inch.	6-inch.		Spare.
	Upper tier.	Lower tier.	Mark I.		Mark II.	Mark III.	Mark I. and Ia.*	Mark II.		Barbette.	Vavasseur central pivot.	Barbette.	Fort or Battery per 10 guns or less No. of each nature.
			"C" pivot.	"D" pivot.									
Loops { iron { guide rope, rammer			2	2	2		2			2		2	
Loops { iron { with { nuts					4		4	4					
Loops { iron { with { nut and key	4	4									2	2	
Loops { steel						4					24		
Loops { steel, with nuts								2					1
Nuts, steel, axle, roller			2	2	2			2					1
Pins { securing, rear frame, steel { upper													
Pins { securing, rear frame, steel { with set screws { lower			1	1			1						
Pins { wrought iron flap, with { upper													
Pins { nut, bracket, firing key { lower			1	1			1				1		
Pins { steel, pivot, with screws						2							
Pins { steel, connecting rear, with { lower						2							
Pins { set screw { upper										1	1		
Plates { bottom, steel													
Plates { bearing ladder, steel			2	2			2				1	1	1
Plates { clip, steel, with bolts { front											1	1	1
Plates { clip, steel, with bolts { rear													
Plates { cover, front, steel with bolts { left												1	
Plates { cover, front, steel with bolts { right												1	
Plates { foundation bolts, cast iron, with iron strap with bolts												20	
Plates { pivot, M. cast steel											1		

Digitized by Google

| | | |

Slides L, B.L.—Component and Spare Parts for (12-inch to 6-inch)—*continued.*

Articles.	12-inch Garrison.		10-inch barbette.				9·2 inch barbette		8-inch	6-inch.		Spare.
	Upper tier.	Lower tier.	"C" pivot.	"D" pivot.	Mark II.	Mark III.	Mark I. and Ia.*	Mark II.	Barbette.	Vavasseur central pivot.	Barbette.	Fort or Battery per 10 guns or less No. of each nature.
Springs, disc { No. 8									20			10
{ 9									32			16
Stages { loading { centre						1						
{ side				1		1						
{ laying, wood, with hand rail, and steps			1				1a		1			
{ loading, with ladder and stays				1								
Steps, wood, side, stage, loading { front			1			1						
{ iron, stage, loading, side { rear					2	1		2				
Stays { block, pivot			2	2	2	2	2	2	2			
{ ladder, rear, W.I., with bolts and screws												
{ wrought-iron, ladder, with bolts			2	2			2		2			
Standards, platform, sighting			2	2	2	2	2	2			2	
Supports, angle, steel, cover plates, with bolts (pairs)			2	2	2	2	2	2				
Trucks, steel { front, with spur wheel	2	2										
{ slide { front { No. 1	2	2			2	2		2				
{ rear { No. 51	2	2										
{ ,, 52	2	2										
Transoms, M. cast steel, rear							2			1		
Washers, bearing, stanchions, with rivets									8			

57
G. No. 3927

Digitized by Google

38407
Equip.
1462

APPARATUS, WITHDRAWING, BREECH-SCREW.											
Arms, steel, with collar and nut	1	...	...	...	...	...	...	...	...	...	...
Balls, revolving, arm, steel	17	...	...	...	...	...	...	...	...	...	6
Bolts adjusting, spring, lever catch, iron, with pin and key	1	...	...	...	...	...	...	...	...	...	...
Bolts locking, steel, with nut	1	...	...	...	...	...	...	...	...	...	...
Brackets metal bolt adjusting, spring, lever catch, with screws	1	...	...	...	...	...	...	...	...	...	...
Brackets metal bolt locking	1	...	...	...	...	...	...	...	...	...	...
Brackets metal screw, withdrawing, with guide locking bolt and screws	1	...	...	...	...	...	...	...	...	...	...
Brackets W.I., retaining arm with bracket metal spring catch	1	...	...	...	...	...	...	...	...	...	...
Collars, packing arm, metal†	1	...	...	...	...	...	...	...	...	...	...
Handles bolt, locking, iron	1	...	...	...	...	...	...	...	...	...	...
Handles screw, withdrawing, iron	1	...	...	...	...	...	...	...	...	...	...
Levers, catch, steel, with pins, collar and split keys	1	...	...	...	...	...	...	...	...	...	...
Plates, packing arm, metal†	1	...	...	...	...	...	...	...	...	...	...
Plugs, jamming, locking bolt, steel	1	...	...	...	...	...	...	...	...	...	...
Screws adjusting, spring, plug, locking bolt, metal	1	...	...	...	...	...	...	...	...	...	...
Screws withdrawing, iron, with collar and nut	1	...	...	...	...	...	...	...	...	...	...
Springs bolt, retaining arm, steel	1	...	...	...	...	...	...	...	...	...	2
Springs spiral steel plug, locking bolt	1	...	...	...	...	...	...	...	...	...	2
Springs spiral steel lever catch	1	...	...	...	...	...	...	...	...	...	2
GEAR, ADJUSTING, HYDRAULIC, BUFFER.											
Levers, adjusting, rods, piston, iron, with screws	...	...	...	2	...	...	2	...	...	...	...
Rods, connecting, levers, adjusting, iron	...	...	...	1	...	...	1	...	...	...	...
Spindles, iron wheel, worm	...	...	...	1	...	...	1	...	...	...	...
Spindles, iron worm	...	...	...	1	...	...	1	...	...	...	...
Wheels, worm iron	...	...	...	1	...	...	1	...	...	...	...
GEAR, BRAKE.											
Axles, drum, brake, iron, with collar and pin	1	...	...	...	...	...	...	...	...	...	...
Bands, friction, steel left	1	...	...	...	...	...	...	...	...	...	...
Bands, friction, steel right	1	...	...	...	...	...	...	...	...	...	...
Counterweights, lever brake, iron, with bolt and nut	2	...	...	...	...	...	...	...	...	...	...
Cramps, brake, iron	...	...	...	1	...	...	1	...	...	...	...

* *See* note * page 520.

† For R.G.F. guns only.

Digitized by Google

Slides L, B.L.—Component and Spare Parts for (12-inch to 6-inch)—*continued.*

Articles.	12-inch Garrison.	10-inch barbette. Mark I. "C" pivot.	10-inch barbette. Mark I. "D" pivot.	10-inch barbette. Mark II.	10-inch barbette. Mark III.	9·2-inch barbette. Mark I. and IA.*	9·2-inch barbette. Mark II.	8-inch. Barbette.	6-inch. Vavasseur central pivot.	6-inch. Barbette.	Spare. Fort or Battery per 10 guns or less No. of each nature.
Drums, brake, iron, with screws, left	1	...	...	...	...	...	...	...	...	...	...
Drums, brake, iron, with screws, right	1	...	...	...	...	...	...	...	...	...	...
Levers, iron, brake	2	...	...	...	...	...	...	...	...	...	...
Levers, iron, brake band	1	...	...	...	...	...	...	...	...	...	...
Levers, iron, rod, connecting, with pin, front	...	...	...	1	...	...	1	...	...	...	...
Levers, iron, rod, connecting, with pin, rear	...	...	...	1	...	...	1	...	...	...	...
Levers, iron, shaft, cross	...	...	...	2	...	...	2	...	...	...	...
Levers, iron, shaft, left	1	...	...	...	...	...	...	...	...	...	...
Levers, iron, shaft, right	1	...	...	...	...	...	...	...	...	...	...
Links, connecting, iron, with pins, nuts and keys	2	...	...	...	...	...	...	...	...	...	...
Pawls, lever, brake, iron	1	...	...	...	...	...	...	...	...	...	...
Pins, bands, friction, steel, with key	2	...	...	...	...	...	...	...	...	...	...
Pins, lever, brake, steel	2	...	...	...	...	...	...	...	...	...	...
Pins, pawl, iron, with collar and key	1	...	...	...	...	...	...	...	...	...	...
Rods, connecting, levers, iron	...	...	...	1	...	...	1	...	...	...	...
Screws, cramp, iron, with collar and nut	...	...	...	1	...	...	1	...	...	...	...
Shafts, cross, iron, with nuts	...	...	...	1	...	...	1	...	...	...	...
Shafts, steel	1	...	...	...	...	...	...	...	...	...	...
Sockets, band, friction, iron	2	...	...	...	...	...	...	...	...	...	...
Stops, lever, iron, shaft, cross	...	...	...	2	...	...	2	...	...	...	...
Stops, lever, iron, with screw and nut	2	...	...	...	...	...	...	...	...	...	...
Wheels, sprocket, iron	1	...	...	...	...	...	...	...	...	...	...

Digitized by Google

GEAR, ELEVATING.

| | | |

Slides L, B.L.—Component and Spare Parts for (12-inch to 6-inch)—*continued.*

Articles.	12-inch Garrison	10-inch barbette.			9·2-inch barbette		8-inch.	6-inch.			Fort or Battery, per 10 guns or less No. of each nature. Spare.
		Mark I. "C" pivot.	Mark I. "D" pivot.	Mark II.	Mark III.	Mark I. and IA.*	Mark II.	Barbette.	Vavasseur central pivot.	Barbette.	
Shafts iron 3rd motion } with coupling and nuts	...	...	...	1	...	...	1	...	...	...	...
iron guide, with collars and pins ...	1	...	...	...	...	...	...	...	...	...	...
steel 1st motion, hand, wheel, } vertical with collar, pin and key } cross	...	...	...	...	...	...	...	...	...	18	...
steel 2nd motion, with collars and nuts	1	...	...	...	...	...	...	...	...	1	...
steel 4th motion, with coupling and nut	...	...	...	1	...	...	1	...	...	...	1
Spindles, gudgeon, wheel, guide, chain, endless, iron, with collar and pin	...	...	...	1	...	...	1	...	...	...	1
38407 **Springs,** steel } spiral, shaft, 3rd motion ...	1	...	...	1	...	...	1	...	...	...	1
Equip. steel } clutch ...	...	...	...	1	...	...	1	...	...	...	1
1462 iron guide, chain, endless ...	...	...	...	2	...	...	2	...	...	...	...
iron hand	...	...	...	1	...	...	1	...	...	...	...
iron sprocket { large ...	2	...	...	1	...	...	1	...	...	...	...
iron sprocket { small ...	...	...	...	1	...	...	1	...	...	...	...
iron spur 50 teeth ...	1	...	...	...	...	...	...	...	...	...	...
Wheels iron spur 30 teeth ...	...	...	...	1	...	...	1	...	...	...	...
iron spur shaft { 3rd motion, 40 teeth	...	...	...	1	...	...	1	...	...	...	...
iron spur shaft { 4th motion, 32 teeth	...	...	...	1	...	...	1	...	...	...	...
metal hand { elevating ...	...	...	...	...	...	...	...	...	...	2	...
metal hand { brake ...	2	...	...	...	...	...	...	...	...	...	...
metal bevel, 16 teeth, shaft, 1st and 2nd motion	pairs	...	...	...	...	...	...	...	...	2	...
Worms, metal worm, shaft, 3rd motion ...	...	...	...	...	...	...	...	...	...	1	...
metal	...	...	...	...	...	...	...	...	...	1	...

Digitized by Google

| | | |

Slides 1, B.L.—Component and Spare Parts for (12-inch to 6-inch)—*continued.*

Articles.	12-inch Garrison.	10-inch barbette. Mark I. "C" pivot.	10-inch barbette. Mark I. "D" pivot.	10-inch barbette. Mark II.	10-inch barbette. Mark III.	9·2-inch barbette Mark I. and IA.*	9·2-inch barbette Mark II.	8-inch. Barbette.	6-inch. Yavasseur central pivot.	6-inch. Barbette.	Spare. Fort or Battery, per 10 guns or less No. of each nature.
Pipes, copper, with fittings { delivery					1	1					
{ suction ...					1	1					
Plates, iron { guide lever adjusting					1	1					
{ stop, lever hand, pump					1	1					
Plates, metal, indicator					1	1					
Plates, steel { ram, hydraulic					1	1					
{ pivot					1	1					1
Pointers, iron					1	1					2†
Pumps, complete					1	1					
Rings, leather, L section, pump (set of 2)			sets		sets	sets					
Rods, iron, eccentric					1	1					
Shafts, steel { disconnecting					1	1					
{ pointer					1	1					
{ crank, pump, with collar					1	1					2†
Spindles, metal, valve { release					1	1					
{ suction					1	1					2†
Strips, plunger, leather (set of 2)			sets		sets	sets					
Studs, iron, plates guide, lever adjusting, with nuts					2	2					2†
Washers, packing, pump, leather (set of 11)			sets		sets	sets					
Tanks, oil					1	1					
GEAR, LOADING.											
Axles, wheel, spur, steel, with collar and split key		1	1			1					

Digitized by Google

| | | |

Slides L, B.L.—Component and Spare Parts for (12-inch to 6-inch)—*continued.*

Articles.	12-inch Garrison.	10-inch barbette. Mark I. "C" pivot.	10-inch barbette. Mark I. "D" pivot.	10-inch barbette. Mark II.	10-inch barbette. Mark III.	9·2-inch barbette Mark I. and IA.*	9·2-inch barbette Mark II.	8-inch. Barbette.	6-inch. Vavasseur central pivot.	6-inch. Barbette.	Spare. Fort or Battery, per 10 guns or less No. of each nature.
GEAR, RETAINING.											
Cylinders, spring tripper, metal, with cap		1	1			1		1		1	
Joints, tripper, steel, with collar, nut and split key		1	1			1		1		1	
Levers, retaining, iron		1	1			1		1		1	
Links, connecting, lever { steel, with pin and washer										2	
Links, connecting, lever { iron		2	2			2		2			
Pins, steel { joint, tripper, with split key		1	1			1		1		1	
Pins, steel { link, connecting, with collar and split key		2	2			2		2		2	
Spindles, spring, tripper, steel		1	1			1		1		1	
Springs, steel { spiral, tripper		1	1			1		1		1	1
Springs, steel { volute, tripper		1	1			1		1		1	
Stops, iron, lever, retaining		1	1			1		1		1	
Studs, steel, with collars and split keys { cylinder, spring, tripper		1	1			1		1		1	
Studs, steel, with collars and split keys { lever, retaining		1	1			1		1		1	
Trippers, steel											
GEAR, TRAVERSING.											
Arcs, metal, graduated, with bolts and nuts	4									1	
Boxes, metal, lubricating, with copper pipe											
Brackets, metal, shaft, 1st motion { upper										1	
Brackets, metal, shaft, 1st motion { lower										1	

Digitized by Google

| | | |

Slides L, B.L.—Component and Spare Parts for (12-inch to 6-inch)—*continued.*

Articles.	12-inch Garrison.	10-inch barbette. Mark I. "C" pivot.	10-inch barbette. Mark I. "D" pivot.	10-inch barbette. Mark II.	10-inch barbette. Mark III.	9·2 inch barbette Mark I. and IA.*	9·2 inch barbette Mark II.	8-inch Barbette.	6-inch. Vavasseur central pivot.	6-inch. Barbette.	Spare. Fort or Battery per 10 guns or less No. of each nature.
Pinions, steel ... bevel 2nd motion, 21 teeth	...	2	2	...	...	2	...	...	...	...	...
Pinions, steel ... bevel 3rd motion, 26 teeth	...	2	2	...	...	2	...	...	...	...	...
Pinions, steel ... bevel shaft, 2nd motion, 12 teeth	...	...	...	...	...	...	...	...	...	...	...
Pinions, steel ... bevel half, 2nd motion, 18 teeth	...	...	...	...	1	...	...	...	...	1	...
Pinions, steel ... bevel shaft, 3rd motion, 20 teeth	...	...	...	...	1	...	...	...	...	...	...
Pinions, steel ... spur shaft, 1st motion, 11 teeth	...	2	2	...	...	2	...	...	...	...	...
Pinions, steel ... spur 4th motion, 10 teeth	...	2	2	...	...	2	...	...	1	1	...
Pinions, steel ... spur shaft, 3rd motion, 11 teeth with spindle, 1st motion, with collars and split keys	...	2	2	...	...	2	...	...	1	1	...
Plates, steel, worm	...	...	...	...	...	...	...	...	...	...	...
Pointers, indicator, steel, with bracket bolt and keep pin	...	...	...	...	...	...	...	...	...	...	...
Screws adjusting, chain, iron, with nut	...	2	...	...	...	...	...	...	...	...	...
Screws lubricating, metal	...	...	...	...	...	...	...	...	...	...	...
Screws brake, steel, with split pin	...	...	...	...	...	...	...	...	2	2	...
Shafts iron... 1st motion	...	...	...	1	1	...	1	...	...	...	...
Shafts iron... 2nd motion, with collars and screws	...	1	...	1	1	...	1	...	...	...	...
Shafts iron... 3rd motion, with collars and screws	...	...	...	2	2	...	2	...	...	...	...
Shafts iron... 4th motion, with collars and screws	...	1	...	...	...	...	...	...	...	...	...
Shafts traversing	...	...	...	...	...	...	...	...	...	...	...
Shafts steel 1st motion, with collars, pin and key	...	...	...	...	...	...	...	...	...	...	...
Shafts steel 1st motion, with collars and keys ...	...	...	...	...	1	...	...	...	...	18	...
Shafts steel 2nd motion with keys	...	...	...	...	1	...	...	...	...	...	...
Shafts steel 2nd motion with key	...	2	2	...	...	2	...	...	...	1	...

Digitized by Google

| | | |

Slides L, B.L.—Component and Spare Parts for (12-inch to 6-inch)—*continued.*

Articles.	12-inch Garrison.	10-inch barbette. Mark I. "O" pivot.	10-inch barbette. Mark I. "D" pivot.	10-inch barbette. Mark II.	10-inch barbette. Mark III.	9·2-inch barbette. Mark I. and IA.*	9·2-inch barbette. Mark II.	8-inch. Barbette.	6-inch. Vavasseur central pivot.	6-inch. Barbette.	Spare. Fort or Battery per 10 guns or less No. of each nature.
GEAR, RUNNING BACK.											
Axles, wheel, serpentine, with pin, collar, and screws								2			
Blocks, metal sheave								4			
Guards, wheel, spur and pinion, { left								1			
with bolts and screws { right								1			
Pinions, spur, spindle, winch handle, 12 teeth								2			
Shackles, iron, block, sheave, with thimble ...								2			
Spindles, winch handle								2			
Wheels, serpentine								2			
LIVE ROLLER SEGMENT.											
Axles, steel, roller {								14§			
Rollers, steel {								17‡			
Segments, steel, live { 178 traverse								14§			
roller, with radial { 237 ,,								17‡			
arms and pivot plate { 240 ,,								1			
								1			

Digitized by Google

Yoke, Steel.

Brackets, iron, with bolts	buffer	...	...	...	...	...	...	...	2	...	...	...	...	...	...	...	...	...	...	...	...	...
	connecting, yoke	...	...	...	...	...	...	...	2	...	...	...	...	...	...	...	...	...	...	...	...	...
Collars, metal	...	...	...	...	...	...	...	...	4	...	...	...	...	...	...	...	...	...	...	...	...	...
Pins, bracket, connecting, iron, with collars and pins								...	2	...	...	...	...	...	...	...	...	...	...	...	...	...
Plates, stop, piston-rod, iron	...	...	...	...	...	...	...	...	2	...	...	...	...	...	...	...	...	...	...	...	...	...
Rollers, steel	...	...	...	...	...	...	...	...	4	...	...	...	...	...	...	...	...	...	...	...	...	...
Springs, disc, spindle, buffer, No. 2	with radius	...	...	...	...	...	...	...	2	...	...	...	...	...	...	...	...	...	...	...	...	1
	without radius							...	22	...	...	...	...	...	...	...	...	...	...	...	...	11
Spindles, buffer, iron, with nuts	...	...	...	...	...	...	...	...	2	...	...	...	...	...	...	...	...	...	...	...	...	1
Yokes, body, without fittings	...	...	...	...	...	...	...	...	1	...	...	...	...	...	...	...	...	...	...	...	...	...

Platforms, Landing, Loading and Sighting.

Blocks, wood, distance, platform landing	long	...	...	...	...	...	...	...	...	...	1‖	1‖	...	...	1‖	...	...	...	...	...	...	...
	short	...	...	...	...	...	...	...	...	...	1‖	1‖	...	...	1‖	...	...	...	...	...	...	...
Boards, platform with bolts	landing (set of 5)	...	...	...	...	...	...	sets	...	1‖	1‖	...	...	...	...	...	...	...	...	...	...	...
	,, (,, 4)	...	...	...	...	...	...	,,	...	...	...	...	...	...	...	...	...	...	...	...	...	...
	loading (,, 5)	...	...	...	...	...	...	,,	...	1‖	1‖	...	...	1‖	...	...	...	...	...	...	...	...
	step, intermediate, with bolts	...	...	...	...	...	...	...	...	1†	1¶	...	...	1	...	...	...	...	...	...	...	...
Brackets, steel, angle	...	...	...	...	...	...	...	...	...	...	...	...	...	...	...	...	...	...	...	2	...	...
Handles, traversing, iron, rear of platform								...	...	...	...	...	...	...	...	...	...	...	...	1	...	...
Ladders, iron, rear, with wood step and bolts								...	...	1	1	...	...	1	...	...	...	...	...	...	...	...
steel, with bolts	...	...	...	...	...	...	...	...	...	...	...	...	...	...	...	...	...	...	...	1	...	...
Plate, iron, angle, connecting boards of landing platform								...	...	1	1	...	...	1	...	...	...	...	...	...	...	...
Platforms, body, steel, with iron chequered plate (without fittings)								...	...	...	...	...	...	...	...	...	...	...	...	1	...	...
Pillars, iron, single, with nut		...	...	...	...	...	...	...	...	...	...	...	...	...	...	...	...	...	...	1	...	...
double		...	...	...	...	...	...	...	...	...	...	...	...	...	...	...	...	...	...	1	...	...
Rails, iron, hand, with bolts	and nuts	...	...	...	...	...	...	...	...	...	...	...	...	...	...	...	...	...	...	1	...	...
	platform landing	...	...	...	...	...	...	...	...	1	1	...	...	1	...	...	...	...	...	1	...	...
	with stanchions, supporting, firing key							...	...	1	1	...	...	1	...	...	...	...	...	...	...	...
Stays, iron, ladder, with bolt		...	...	...	...	...	...	...	...	...	...	...	...	...	...	...	...	...	...	...	...	...
rear with bolts	centre	...	...	...	...	...	...	...	...	...	...	...	...	...	...	...	...	...	...	1	...	...
	left	...	...	...	...	...	...	...	...	1	1	...	...	1	...	...	...	...	...	...	...	...
	right	...	...	...	...	...	...	...	...	1	1	...	...	1	...	...	...	...	...	...	...	...
Steps, iron, sighting, 10° depression		...	...	...	...	...	...	...	...	1	1	...	...	1	...	...	...	...	...	...	...	...
									...	...	...	...	...	...	...	...	...	...	...	1	...	...

* *See* note *, page 520.
§ For segments, 175° traverse.
† For Registered No. 3545 and 3546 only.
‖ Demands should state the Registered No. of mountings.
‡ For segments, 237° and 240° traverse.
¶ For Registered No. 3361 only.

Digitized by Google

Slides, L, B.L.—Component and Spare Parts for (12-inch to 6-inch)—*continued.*

Articles.	12-inch Garrison.	10-inch barbette. Mark I. "C" pivot.	10-inch barbette. Mark I. "D" pivot.	10-inch barbette. Mark II.	10-inch barbette. Mark III.	9·2-inch barbette Mark I. and IA.*	9·2-inch barbette Mark II.	8-inch. Barbette.	6-inch. Vavasseur central pivot.	6-inch. Barbette.	Spare. Fort or Battery per 10 guns or less No. of each nature.
SHIELD.											
Arcs, securing hinged shield, with screws	...	...	...	...	...	...	...	...	1	...	...
Brackets, securing shield to slide, with bolts and screws ...	...	...	...	...	...	...	...	...	2	...	...
Covers, steel, hole in shield	...	...	...	...	...	...	...	...	1	...	...
Handles, for hinged shield, with screws	...	...	...	...	...	...	...	...	1	...	...
Hinges, for roof	...	...	...	...	...	...	...	...	4	...	...
Keys, wrought iron, split, round, loop head { ·187" × 1·75" ·25" × 1·75"	...	...	...	...	...	...	...	...	2	...	...
Loops, steel, lifting { hinged, roof, with nut and split key...	...	...	...	...	...	...	...	...	2	...	...
Pins, steel { hinge, roof	...	...	...	...	...	...	...	...	2	...	...
{ arc, with chain	...	...	...	...	...	...	...	...	1	...	...
Roofs, hinged	...	...	...	...	...	...	...	...	1	...	...
Shields, { with angles and screws, circular, with fixed roof	...	...	...	...	...	...	...	...	1	...	...
steel { flat, 3 in. thick	...	...	...	...	...	...	...	...	1	...	...

* *See* note *, page 520.

Digitized by Google

Digitized by Google

CARRIAGES, GARRISON, R.M.L.—

Component and spare parts.	Carriages.														
		Small port.					Double plate, Casemate or dwarf.								
	Casemate, 12·5-in., 38 tons, 7 ft. recoil, Mark II., II*., and III.	12·5-in., 38 tons.		10 in.	Casemate, 10-in., Mark II., low.		12·5-in., 38 tons, Mark II. and III.	12-in., 35 tons.	11 or 12-in., 25 tons.	10-in., Mark I., E.O.C.		10-in.	9-in.	7-in.	
		7 ft. recoil, Mark II.	6 ft. recoil.												
Axles, steel roller — with nuts — long	...	...	...	...	...	...	...	...	...	...	...	...	...	...	...
Axles, steel roller — with nuts — short	...	...	...	...	...	...	...	...	...	...	...	...	...	...	...
Axles, steel roller — with nut and split key	...	...	...	...	...	...	...	...	...	...	...	...	...	...	...
Axles, steel roller — with split keys	...	...	...	...	...	...	...	...	...	...	...	...	...	...	...
Bands, iron, securing, hydraulic buffer	1	2	...	...	...	...	1	...	...	...	...	...	...	...	...
Balls, steel, bearing, trunnion	...	...	...	...	...	...	...	...	...	...	...	...	...	...	...
Bearings, with bolts or screws — metal — iron — axles, roller	...	...	...	...	...	...	...	...	...	...	...	...	...	...	...
Bearings, with bolts or screws — metal — iron — screw, following up — inside	...	2	2	...	...	...	...	...	...	...	...	...	...	...	...
Bearings, with bolts or screws — metal — iron — screw, following up — outside	...	2	2	...	...	...	...	...	...	...	...	...	...	...	...
Bearings, with bolts or screws — metal — axles — front roller — ...	4	4	4	4	4	4	4	4	4	...	4	4	4	...	...
Bearings, with bolts or screws — metal — axles — front roller — inner, with feather	...	...	...	...	...	...	...	...	...	2	...	...	...	...	...
Bearings, with bolts or screws — metal — axles — front roller — outer	...	...	...	...	...	...	...	...	...	2	...	...	...	...	...
Bearings, with bolts or screws — metal — axles — roller	...	...	...	...	...	...	...	...	...	...	...	...	...	...	...
Bearings, with bolts or screws — metal — axles — ...	1†	...	...	...	...	...	1‡	...	...	...	...	...	...	...	...
Bearings, with bolts or screws — metal — elevating gear, pinion spindle — 1st motion	...	...	...	...	...	...	...	...	...	...	...	...	...	...	...
Bearings, with bolts or screws — metal — elevating gear, pinion spindle — 2nd ,,	...	...	...	...	...	...	...	...	...	...	...	...	...	...	...
Bearings, with bolts or screws — metal — elevating gear, pinion spindle — 3rd ,,	...	...	...	...	...	...	...	...	...	...	...	...	...	...	...
Bearings, with bolts or screws — metal — elevating gear, pinion spindle — left or right	...	...	...	...	...	...	...	...	...	...	...	...	...	...	...
Bearings, with bolts or screws — metal — elevating gear, spindle wheel hand	1‡	...	...	...	...	...	1‡	...	...	...	...	...	...	...	...
Bearings, with bolts or screws — metal — nipping gear	1	2	2	...	...	...	1	1	...	...	...	...	...	...	...
Bearings, with bolts or screws — metal — screw, compressor	1	1	1	...	...	...	1	...	...	...	...	...	...	...	...
Bearings, with bolts or screws — metal — shafts — ...	...	4	4	4	...	...	4	4	...	...	...	...	...	...	...
Bearings, with bolts or screws — metal — shafts — eccentric, rear — left — inside	...	...	...	...	...	...	...	...	...	1	...	...	...	...	...
Bearings, with bolts or screws — metal — shafts — eccentric, rear — left — outside	...	...	...	...	...	...	...	...	...	1	...	...	...	...	...
Bearings, with bolts or screws — metal — shafts — eccentric, rear — right — inside	...	...	...	...	...	...	...	...	...	1	...	...	...	...	...
Bearings, with bolts or screws — metal — shafts — eccentric, rear — right — outside	...	...	...	...	...	...	...	...	...	1	...	...	...	...	...
Bearings, with bolts or screws — metal — shafts — longitudinal	...	2	2	...	...	...	...	...	...	...	...	...	...	...	...
Bearings, with bolts or screws — metal — shafts — winch handle	...	2	2	...	...	...	...	...	...	...	...	...	...	...	...
Bearings, with bolts or screws — metal — spindle, hydraulic lift	...	2	2	...	...	...	...	...	...	...	...	...	...	...	...
Bearings, with bolts or screws — metal — trunnion — left	...	...	...	...	...	...	...	...	...	...	...	...	...	...	...
Bearings, with bolts or screws — metal — trunnion — right	...	...	...	...	...	...	...	...	...	...	...	...	...	...	...
Bearings, with bolts or screws — manganese bronze, ball trunnion — left	...	...	...	...	...	...	...	...	...	...	...	...	...	...	...
Bearings, with bolts or screws — manganese bronze, ball trunnion — right	...	...	...	...	...	...	...	...	...	...	...	...	...	...	...
Blocks — iron, trunnion, with loops	...	2	2	...	...	...	...	...	...	...	...	...	...	...	...
Blocks — wood, buffer, with bolts	1	...	...	1	1	1	1	1	1	...	1	1	1	...	...
Bolts, iron, cap-square	...	...	...	...	...	...	...	...	...	...	...	...	...	...	...
Brackets, with bolts or screws — cast-iron — shaft, winch handle, lifting gear	...	...	...	2	...	...	...	...	...	...	...	...	...	...	...
Brackets, with bolts or screws — cast-iron — spindle, buffer — front	...	...	...	...	...	...	...	...	...	2	...	...	...	...	...
Brackets, with bolts or screws — cast-iron — spindle, buffer — rear	...	...	...	...	...	...	...	...	...	2	...	...	...	...	...
Brackets, with bolts or screws — cast-iron — 1st and 2nd motion, traversing gear — left	...	...	...	...	...	...	...	...	...	...	...	...	...	...	...
Brackets, with bolts or screws — cast-iron — 1st and 2nd motion, traversing gear — right	...	...	...	...	...	...	...	...	...	...	...	...	...	...	...

† For Mark II*. and III. only
‡ ,, ,, III. only.
} demands for these parts must show the Marks of carriage to prevent mistakes.

Digitized by Google

COMPONENT AND SPARE PARTS FOR.

	Carriages.									Proportion of spare for each
	R.M.L.				Single plate, R.M.L.					
					Casemate.		Dwarf.			
	12·5-in. converted, small port, Mark I.	10·4-in., barbette.	10-in., Mark III.	High angle, 9-in. and 10-in., Mark III.	9-in., Mark II.	7-in., 6½ tons, 6 ft. parapet.	11 or 12-in., 25 tons.	9-in., Mark I.	9-in., Mark II.	7-in.	9-in., Mark I.	9-in., Mark II.	7-in.	Detached group of Sub-Districts. per 10 guns, or less No. of each nature.	Sub-District. per 10 guns, or less No. of each nature.	Fort or Battery. per 10 guns, or less No. of each nature.
57 D'port 5011		9		16		10								2	6	
		1				1										
57 G. No. 4333			1													
			1													
			1													
38407 Equip. 1511			4	58	4	20										
	1						2	2	2	2	2	2	2			
	1			1												
	4			1												
	2			1												
	1	20														
	1	1														
	4															
	2															
	1															
	1															
	1

Carriages, Garrison, R.M.L.—

| Component and spare parts. | Carriages. | | |

Component and Spare parts for—*continued.*

Carriages.												Proportion of spare for each		
R.M.L.						Single plate, R.M.L.								
						Casemate.			Dwarf.					
12·5-in. converted, small port, Mark I.	10·4-in., barbette.	10-in., Mark III.	High angle, 9-in. and 10-in., Mark III.	9-in., Mark II.	7-in., 6½ tons, 6 ft. parapet.	11 or 12-in., 25 tons.	9-in., Mark I.	9-in., Mark II.	7-in.	9-in., Mark I.	9-in., Mark II.	7-in.	Detached group of Sub-Districts. per 10 guns, or less No. of each nature.	Sub-District. per 10 guns, or less No. of each nature.	Fort or Battery. per 10 guns, or less No. of each nature.
...	1	...	...	...	...	...	...	...	...	...	...	...	...	...	...
1	...	...	...	...	...	1	1	...	...	1	...	...	...	...	...
...	...	...	...	...	...	...	...	2*	...	...	2*	...	...	...	...
1	...	...	...	...	...	...	...	...	...	...	...	...	...	...	...
1	...	...	...	...	2	...	...	...	...	...	...	...	...	...	...
...	...	...	...	...	...	...	...	...	...	...	...	...	...	...	...
1	...	...	...	...	...	...	...	...	...	...	...	...	...	...	...
1	...	...	...	...	...	...	...	...	...	...	...	...	...	...	...
...	...	1	...	1	...	1	1	...	...	...	1	...	...	...	...
...	...	1	...	1	...	1	1	...	...	...	1	...	...	...	...
...	...	...	...	...	...	1	...	...	...	...	...	...	...	...	...
...	...	1	...	1	...	1	1	...	...	...	1	...	...	...	...
...	1	...	...	1	...	1	...	1	...	...	...	...	...	...	...
...	1	...	...	...	...	...	...	...	...	...	...	...	...	...	...
...	1	...	...	2	...	...	...	...	...	...	...	...	...	...	...

for which a supply of spare is laid down, they are shown in *italics*.

38407 Equipt. 1617

38407 Equipt. 1617

Digitized by Google

Carriages, Garrison, R.M.L.—

Component and spare parts.	Carriages.														
					Double plate,										
			Small port.					Casemate or dwarf.							
			12·5-in., 38 tons.												
	Casemate, 12·5-in., 38 tons, 7 ft. recoil, Mark II., II*. and III.	7 ft. recoil, Mark II.	6 ft. recoil.	10-in.	Casemate, 10-in., Mark II., low.	12·5-in., 38 tons, Mark II. and III.	12-in , 35 tons.	11 or 12-in., 25 tons.	10-in., Mark I., E.O.C.	10-in.	9-in.	7-in.
Brackets, with bolts or screws															
metal traversing 1st motion left	...	...	...	...	...	...	...	...	...	...	...	...	...	...	...
metal traversing 1st motion right	...	...	...	...	...	...	...	...	...	...	...	...	...	...	...
metal traversing 2nd motion	...	...	...	...	...	...	...	...	...	...	...	...	...	...	...
metal wheel, worm	...	...	...	...	...	...	...	...	...	...	...	...	...	...	...
iron buffer	...	...	...	...	...	...	...	...	...	...	...	...	...	...	...
iron cramp, elevating gear	...	1	...	...	...	...	1	1	...	...	...	...	...	...	...
iron guard, girder ring front	...	...	...	...	...	...	...	...	...	...	...	...	...	...	...
iron guard, girder ring rear	...	...	...	...	...	...	...	...	...	...	...	...	...	...	...
iron guide for chain left	...	1	1	1	...	...	1	1	...	...	...	...	...	...	...
iron guide for chain right	...	1	1	1	...	...	1	1	...	...	...	...	...	...	...
iron hydraulic buffer ...	...	...	...	...	...	1	...	1	1	1	1	1	1	1	1
iron hydraulic buffer left	...	...	...	1	1	...	...	...	...	...	...	...	...	...	...
iron hydraulic buffer right	...	...	...	1	1	...	...	...	...	...	...	...	...	...	...
iron pawl, retaining nipping lever	...	1	1	1	...	...	1	1	...	...	...	...	...	...	...
iron plates, compressor left	...	1	...	...	...	...	1	...	...	...	...	...	...	...	...
iron plates, compressor right	...	1	...	...	...	...	1	...	...	...	...	...	...	...	...
iron pointer	...	1†	...	...	...	...	1‡	...	...	...	...	...	...	...	...
iron rocking lever	...	1	2	2	...	...	1	...	...	...	...	...	...	...	...
iron stop lever hydraulic lift left	...	...	1	1	1	...	...	...	...	...	...	...	...	...	...
iron stop lever hydraulic lift right	...	...	...	...	1	...	...	...	...	...	...	...	...	...	...
iron stop lever nipping	...	1	1	1	...	...	1	...	...	...	...	...	...	...	...
steel hydraulic buffer	...	...	...	...	...	...	...	...	...	...	...	...	...	...	...
steel shaft, worm, elevating gear	...	...	...	...	...	...	...	...	...	...	...	...	...	...	...
Buffers, hydraulic	...	1	...	...	...	...	...	...	...	...	...	...	...	...	...
	...	2*	...	...	...	...	...	...	...	...	...	...	...	...	...
	...	...	...	...	...	...	1	...	...	...	...	...	...	...	...
	...	...	...	...	...	...	...	...	...	...	...	...	...	...	...
	...	...	...	...	...	...	...	...	...	...	...	...	...	...	...
Capsquares metal	...	...	...	...	...	...	...	...	...	...	...	...	...	...	...
Capsquares iron	...	2	...	...	...	2	2	2	2	2	2	2	2	2	2
Capsquares steel	...	...	...	...	...	...	...	...	...	...	...	...	...	...	...
Carriages, body, without fittings	...	1	1	1	1	1	1	1	1	1	1	1	1	1	1
Catches, iron, lever, nipping	...	1	...	...	...	...	1	...	...	...	...	...	...	...	...
Counterweights, iron, step, with bolt	...	1	...	...	...	...	1	1	...	...	...	...	...	...	...
Cradles, cast-steel, with metal liners and bolts	...	...	...	...	...	...	...	...	...	...	...	...	...	...	...
Glands, hydraulic buffer, metal inside	...	...	...	...	...	...	...	...	...	...	...	...	...	...	...
Glands, hydraulic buffer, metal outside	...	...	...	...	...	...	...	...	...	...	...	...	...	...	...
Guards, iron, girder, ring left	...	...	...	...	...	...	...	...	...	...	...	...	...	...	...
Guards, iron, girder, ring right	...	...	...	...	...	...	...	...	...	...	...	...	...	...	...

Where articles are interchangeable with others on the same line

* 1 left and 1 right.

† For Mark II*. and III. only } demands for these parts must show the mark of carriage,
‡ ,, ,, III. only ... ... } to prevent mistakes.

Digitized by Google

Component and Spare parts for—*continued.*

Carriages.													Proportion of spare for each		
R.M.L.						Single plate, R.M.L.									
						Casemate.			Dwarf.						
12·5-in. converted, small port, Mark I.	10·4-in., barbette.	10-in., Mark III.	High angle, 9-in. and 10-in., Mark III.	9-in., Mark II.	7-in., 6½ tons, 6 ft. parapet.	11 or 12-in., 25 tons.	9-in., Mark I.	9-in., Mark II.	7-in.	9-in., Mark I.	9-in., Mark II.	7-in.	Detached group of Sub-Districts, per 16 guns, or less No. of each nature.	Sub-District, per 10 guns, or less No. of each nature.	Fort or Battery, per 10 guns, or less No. of each nature.
...	...	...	...	...	...	...	...	...	...	...	...	...	...	...	...
...	...	...	1	...	...	...	...	...	...	...	...	...	...	...	...
...	...	...	1	...	...	...	...	...	...	...	...	...	...	...	...
1	2	...	2	...	...	...	...	...	...	...	...	...	...	...	...
...	...	...	...	...	...	...	...	...	...	...	...	...	...	...	...
1	...	...	2	...	...	...	...	...	...	...	...	...	...	...	...
1	...	...	...	...	...	...	...	...	...	...	...	...	...	...	...
...	...	...	...	...	...	1	1	...	1	1	...	1	...	...	...
1	...	1	...	1	...	...	...	...	...	...	...	...	...	...	...
1	...	1	...	1	...	...	...	...	...	...	...	...	...	...	...
...	...	...	...	...	...	...	...	...	...	...	...	...	...	...	...
1	...	...	...	...	...	...	...	...	...	...	...	...	...	...	...
...	2	...	1	...	...	...	...	...	...	...	...	...	...	...	...
...	...	...	...	...	...	...	...	...	...	...	...	...	...	...	...
...	2	...	...	...	1	...	...	...	...	...	...	...	...	1	...
...	...	...	...	...	...	...	...	...	...	...	...	...	...	2	...
...	1	...	...	...	...	...	...	...	...	...	...	...	...	1	...
...	2	2	2	2	2	2	2	...	2	2	...	2	...	1	...
1	1	1	1	1	1	1	1	...	1	1	...	1	...	...	...
...	...	...	...	...	...	...	...	...	...	...	...	...	...	...	...
...	1	...	1	...	...	...	...	...	...	...	...	...	...	...	...
...	1	...	...	...	...	...	...	...	...	...	...	...	...	...	...
...	...	...	1	...	...	...	...	...	...	...	...	...	...	...	...
...	...	...	1	...	...	...	...	...	...	...	...	...	...	...	2
...	...	...	...	...	...	...	...	...	...	...	...	...	...	...	2

for which a supply of spare is laid down, they are shown in *italics.*

Digitized by Google

Carriages, Garrison, R.M.L.—

Component and spare parts.	Carriages.												
		Double plate,											
		Small port.				Casemate or dwarf							
	Casemate, 12·5 in., 38 tons, 7-ft. recoil, Mark II., II*. and III.	12·5 in., 38 tons. 7-ft. recoil, Mark II.	12·5 in., 38 tons. 6-ft. recoil.	10-in.	Casemate, 10-in., Mark II., low.	12·5-in., 38 tons, Mark II. and III.	12-in., 25 tons.	11 or 12-in., 25 tons.	10-in., Mark I., E.O.C.	10-in.	9-in.	7-in.
Guides iron, rack elevating, with screws: front	...	1	1	...	...	...	...	...	...	...	...	...	
Guides iron, rack elevating, with screws: rear (in 2 pieces)	...	1	1	...	...	...	...	...	...	...	...	...	
Guides metal, arc elevating: left	...	...	...	...	1	...	...	1	1	1	...	...	
Guides metal, arc elevating: left, front	...	...	...	...	...	...	...	...	...	...	...	...	
Guides metal, arc elevating: left, rear	...	...	...	...	...	...	...	...	...	...	...	...	
Guides metal, arc elevating: right	...	...	...	...	1	...	...	1	1	1	...	...	
Guides metal, arc elevating: right, front	...	...	...	...	...	...	...	...	...	...	...	...	
Guides metal, arc elevating: right, rear	...	...	...	...	...	...	...	...	...	...	...	...	
Guides metal, arc elevating: upper and lower	...	...	...	...	...	...	...	...	...	...	...	...	
Keys, capsquare with chains: No. 81	4	...	...	...	...	4	4	...	...	...	...	...	
Keys, capsquare with chains: ,, 82	...	...	...	...	...	...	...	4	...	...	...	...	
Keys, capsquare with chains: ,, 83	...	...	...	...	...	...	...	...	...	...	...	...	
Keys, capsquare with chains: ,, 84	...	...	...	...	...	...	...	...	...	4	...	...	
Keys, capsquare with chains: ,, 85	...	...	...	...	4	...	...	...	...	...	...	...	
Keys, capsquare with chains: ,, 86	...	...	...	...	...	...	...	...	...	4	...	...	
Keys, capsquare with chains: ,, 87	...	...	...	...	...	...	...	...	...	...	...	...	
Keys, capsquare with chains: ,, 88	...	...	...	...	...	...	...	...	...	...	...	4	
Keys, capsquare with chains: ,, 89	...	...	...	...	...	...	...	...	...	...	...	...	
Keys, capsquare with chains: ,, 102	...	...	...	...	...	...	...	...	...	...	...	...	
Keys, capsquare with chains: ,, 103	...	...	...	...	...	...	...	...	4	...	...	...	
Keys, capsquare with chains: ,, 104	...	...	...	...	...	...	...	...	...	...	...	...	
Loops, iron, bracket: with collar, nut, and split key	...	...	...	...	...	...	...	...	...	...	...	...	
Loops, iron, bracket: with nuts, front	2	2	2	2	2	2	2	2	2	2	2	2	
Loops, iron, bracket: with nuts, rear	2	2	2	2	2	2	2	2	2	2	2	2	
Loops, iron: common, with nuts, side	...	...	...	...	...	...	...	...	...	...	...	...	
Loops, iron: rope, guide, rammer, with nuts	...	...	...	...	...	...	...	...	2	...	...	...	
Loops, iron: transom, rear, with nut	...	...	...	...	...	...	...	...	2	...	...	...	
Nuts, metal, screw, elevating	...	...	...	...	...	...	...	...	...	...	...	...	
Pans, drip, hydraulic buffer: No. 13	...	...	...	...	...	1	...	...	...	...	...	...	
Pans, drip, hydraulic buffer: ,, 14	...	...	...	...	...	1	...	...	...	...	...	...	
Pins iron, step, with split key	1	...	...	...	...	1	1	...	...	...	...	...	
Pins steel, tie plate, with keys	...	6	6	...	...	...	...	...	...	...	...	...	
Plates cast-iron, packing bracket, shaft, worm	...	...	...	...	...	...	...	...	...	...	...	...	
Plates clip, iron, with bolts: front, pairs	1	1	1	1	1	1	1	1	...	1	1	1	
Plates clip, iron, with bolts: left, ,,	...	...	...	...	...	...	...	...	...	...	...	...	
Plates clip, iron, with bolts: right, ,,	...	...	...	...	...	...	...	...	...	...	...	...	
Plates clip, iron, with bolts: —, ,,	...	...	...	...	...	...	...	...	1	...	...	...	
Plates iron, cover, hand holes, with screws: oval	...	...	...	...	...	...	...	...	...	...	...	...	
Plates iron, cover, hand holes, with screws: round	...	...	...	...	...	...	...	...	...	...	...	...	
Plates iron, stop, rear roller, with bolts: left	...	...	...	...	...	...	...	...	1	...	...	...	
Plates iron, stop, rear roller, with bolts: right	...	...	...	...	...	...	...	...	1	...	...	...	

38407
Equipt.
1554

Where articles are interchangeable with others on the same line
† Per carriage.

Digitized by Google

Component and Spare parts for—*continued.*

Carriages.												Proportion of spare for each		
R.M.L.						Single plate, R.M.L.								
						Casemate.			Dwarf.					
12·5-in. converted, small port, Mark I.	10·4-in. barbette.	10-in., Mark III.	High angle, 9-in. and 10-in., Mark III.	9-in., Mark II.	7-in., 6½ tons, 6 ft. parapet.	11 or 12-in., 25 tons.	9-in., Mark I.	9-in., Mark II.	7-in.	9-in., Mark I.	9-in., Mark II.	7-in.	Detached group of Sub-Districts. per 10 guns, or less No. of each nature.	Sub-District. per 10 guns, or less No. of each nature.	Fort or Battery. per 10 guns, or less No. of each nature.
...	...	...	...	...	1	...	...	...	...	...	...	...	...	...	...
...	...	1	...	1	...	...	...	...	...	...	...	...	...	...	...
...	...	1	...	1	1	...	...	...	...	...	...	...	...	...	...
...	2	1	...	1	...	...	...	...	...	...	...	...	...	...	...
...	...	...	...	...	...	...	...	...	...	...	...	...	...	...	...
...	...	2	...	...	...	...	...	...	...	...	...	...	...	...	...
...	...	...	...	4	...	...	...	2	...	2	...	...	...	...	...
...	...	...	...	...	2	...	...	...	2	...	...	2	...	...	2†
...	4	...	4	...	...	...	...	...	...	...	...	...	...	...	1
2	...	2	...	2	4	...	...	...	...	...	2	2	...	...	...
...	...	...	...	...	1	...	...	...	...	...	...	...	...	...	...
...	...	...	...	...	...	...	...	...	...	...	...	...	...	...	...
...	...	...	...	...	...	...	...	...	...	...	...	...	...	...	...
...	...	...	...	...	...	...	...	...	...	...	...	...	...	...	...
...	...	...	...	...	...	...	...	...	...	...	...	...	...	...	...
...	...	...	...	...	...	...	...	...	...	...	...	...	...	...	...
...	...	...	...	...	...	...	...	...	...	...	...	...	...	...	...
...	...	...	...	...	...	...	...	...	...	...	...	...	...	...	...
1	...	...	1	...	1	1	1	...	1	1	...	1	...	...	...
...	1	...	...	...	...	...	...	...	...	...	...	...	...	...	1 pair
...	1	...	...	...	...	...	...	...	...	...	...	...	...	...	1 pair
...	...	1	...	1	...	...	...	...	...	...	...	...	...	...	...
...	...	...	12	...	...	...	...	...	...	1	...	...	...	...	...
...	...	...	1	...	...	...	...	...	...	...	...	...	...	...	...
...	...	...	...	...	...	...	...	...	...	...	...	...	...	...	...
...	...	...	...	...	...	...	...	...	...	...	...	...	...	...	...

for which a supply of spare is laid down, they are shown in *italics*.

38407 Equipt. 1617

38407 Equipt. 1617

Digitized by Google

Carriages, Garrison, R.M.L.—

Component and spare parts.	Carriages.												
		Double plate,											
		Small port.					Casemate or dwarf.						
	Casemate, 12·5-in., 38 tons, 7 ft. recoil, Mark II. 11*. and III.	12·5-in., 38 tons.		10-in.	Casemate, 10-in., Mark II., low.		12·5-in., 38 tons, Mark II. and III.	12-in., 35 tons.	11 or 12-in., 25 tons.	10-in., Mark I., E.O.C.	10-in.	9-in.	7-in.
		7 ft. recoil, Mark II.	6 ft. recoil.										
Plates iron rear roller loop, with bolts	...	...	...	...	...		...	...	...	...	...	...	...
Plates iron rear roller drop, with bolts	...	...	...	...	4		...	...	4	...	4	4	4
Plates iron rear roller plain	...	...	...	...	2		...	...	2	...	2	2	2
Plates iron rear roller with stop left	...	...	...	...	1		...	...	1	...	1	1	1
Plates iron rear roller with stop right	...	...	...	...	1		...	..	1	...	1	1	1
Plates iron tie	...	1	1	...	...		...	...	...	2	...	...	...
Plates metal, with screws arrow, elevate and depress	...	...	...	...	...		...	...	...	1	...	...	...
Plates metal, with screws inscription	...	...	...	...	...		...	...	...	...	...	...	...
Plates metal, with screws instruction	...	...	...	...	...		...	...	...	...	...	...	...
Plates steel, clip, with bolts front	...	...	...	...	...		...	...	...	...	...	...	...
Plates steel, clip, with bolts rear	...	...	...	...	...		...	...	...	...	...	...	...
Plugs metal, lubricating bracket, wheel, worm	...	...	...	...	...		...	...	...	...	...	...	...
Plugs hydraulic buffer filling hole No. 8	...	...	...	...	...		...	...	...	...	...	...	...
Plugs hydraulic buffer filling hole ,, 21	1	2	...	...	...		1	...	...	...	...	...	...
Plugs hydraulic buffer draw off	...	...	...	...	...		...	...	...	...	...	...	...
Pointers, steel, arc, traversing, No. 8, with metal bracket and bolts	...	...	...	...	...		...	...	...	...	...	...	...
Racks, steel, with bolts, running in and out	...	...	...	...	...		...	...	...	...	...	...	...
Rails, hand, iron, rear of carriage	...	...	...	...	...		...	...	...	...	...	...	...
Rings, roller, steel	...	...	...	...	...		...	...	...	...	...	...	...
Rollers, steel, carriage No. 4	...	...	...	...	...		...	...	...	...	...	...	...
Rollers, steel, carriage ,, 7	...	...	...	...	...		...	...	...	...	...	...	...
Rollers, steel, carriage ,, 14	...	...	...	...	...		...	...	...	...	...	...	...
Rollers, steel, carriage ,, 15	...	...	...	...	...		...	...	...	...	...	...	...
Screws metal, lubricating boss-head, $\frac{3}{8}$-inch	...	...	...	...	...		...	...	...	4	...	...	...
Screws metal, lubricating thumb $\frac{3}{8}$,,	...	...	...	...	...		...	...	...	...	...	...	...
Screws metal, lubricating thumb $\frac{5}{16}$,,	...	...	...	...	...		...	...	...	1	...	...	...
Screws steel, supporting ball, bearing trunnion, with set screw	...	...	...	...	...		...	...	...	...	...	...	...
Sockets, iron, priming iron, with screws	1	1	1	1	1		1	1	1	1	1	1	1
Spindles buffer, with collar, nut, and split key	...	...	...	...	...		...	...	...	4	...	...	...
Spindles iron, catch, lever, nipping	1	1	1	...	...		1	...	...	...	...	...	...
Springs, disc No. 33	...	...	...	...	...		...	...	...	...	...	...	...
Springs, disc ,, 5	...	...	...	...	...		...	...	...	44	...	...	...
Steps iron, rear left	1	...	...	...	...		1	1	...	...	...	...	...
Steps iron, rear right	1	...	...	...	...		1	1	...	...	...	...	...
Steps wood, side, right	...	1	1	...	...		...	...	...	...	...	...	...
Valve piston rod, hydraulic buffer	...	...	...	...	...		...	...	...	...	...	...	...

Where articles are interchangeable with others on the same line

Digitized by Google

Component and Spare parts for—*continued.*

Carriages.														Proportion of spare for each		
R.M.L.						Single plate, R.M.L.										
						Casemate.				Dwarf.						
12·5-in. converted, small port, Mark I.	10·4-in., barbette.	10-in., Mark III.	High angle, 9-in. and 10-in., Mark III.	9-in., Mark II.	7-in., 6½ tons, 6 ft. parapet.	11 or 12-in., 25 tons.	9-in., Mark I.	9-in., Mark II.	7-in.	9-in., Mark I.	9-in., Mark II.	7-in.	Detached group of Sub-Districts. per 10 guns, or less No. of each nature.	Sub-District. per 10 guns, or less No. of each nature.	Fort or Battery. per 10 guns, or less No. of each nature.
...	2	...	...	...	...	...	...	...	...	...	...	...	...	...	...
...	...	...	...	...	...	...	...	...	...	...	...	...	...	...	...
...	...	...	...	...	...	1	1	...	...	1	...	...	...	...	...
2	...	2	2	2	...	1	1	...	...	1	...	...	...	...	2
1	...	1	1	1	...	...	...	2	...	...	2	...	...	...	...
...	...	...	1	...	...	...	...	...	...	...	...	...	...	...	...
...	...	...	1	...	...	...	...	...	...	...	...	...	...	...	...
1	...	...	...	...	...	...	...	...	...	...	...	...	...	...	...
...	1	...	...	...	...	...	...	...	...	...	...	...	...	1	1
...	1	...	...	...	1	...	...	...	...	...	...	...	...	1	1‡
...	...	...	1	...	...	...	...	...	...	...	...	...	...	...	...
...	1	...	...	...	1	...	...	...	...	...	...	...	...	...	...
...	...	...	1	...	...	...	...	...	...	...	...	...	...	...	...
...	...	...	16	...	10	...	...	...	...	...	...	...	...	...	...
...	10	...	...	...	...	...	...	...	...	...	...	...	...	...	...
...	...	4	...	2	...	...	...	...	...	...	...	...	...	...	...
...	...	2	6	...	...	...	...	...	...	...	...	...	...	...	2†
...	...	...	...	2	...	...	...	...	...	...	...	...	...	...	1†
...	...	...	7	...	...	...	...	...	...	...	...	...	...	...	1†
...	...	...	2	...	...	...	...	...	...	...	...	...	...	...	2†
1	...	1	...	1	1	1	1	...	1	1	...	1	...	...	...
...	...	...	...	...	...	...	...	...	...	...	...	...	...	2	...
1	...	...	...	...	...	...	...	...	...	...	...	...	...	...	...
...	...	...	4	...	...	...	...	...	...	...	...	...	...	...	2
...	...	...	...	...	...	...	...	...	...	...	...	...	...	4	...
...	...	...	...	...	...	...	...	...	...	...	...	...	...	...	...
...	...	...	...	...	...	...	...	...	...	...	...	...	...	...	...
...	1	...	...	...	...	...	...	...	...	...	...	...	...	...	2

for which a supply of spare is laid down, they are shown in *italics.*

† Per carriage.

‡ 2 for 12·5-in., 7 ft. recoil, small port

38407 Equipt. 1617

38407 Equipt. 1617

Digitized by Google

Carriages, Garrison, R.M.L.—

| Component and spare parts. | Carriages. | | |

Component and Spare parts for—*continued.*

Carriages.											Proportion of spare for each		
R.M.L.						Single plate, R.M.L.							
						Casemate.			Dwarf.				
12·5-in. converted, small port, Mark I.	10·4-in., barbette.	10-in., Mark III.	High angle, 9-in. and 10-in., Mark III.	9-in., Mark II.	7-in., 6½ tons, 6 ft. parapet.	11 or 12-in., 25 tons.	9-in., Mark I.	9-in., Mark II.	7-in.	9-in., Mark I.	9-in., Mark II.	7-in.	Detached group of Sub-Districts. per 10 guns, or less No. of each nature.	Sub-District. per 10 guns, or less No. of each nature.	Fort or Battery. per 10 guns, or less No. of each nature.
... ...	... ...	... ...	... ...	... ...	... ...	... ...	... ...	... ...	... ...	... ...	... ...	... ...	... ...	... ...	... ...
... ...	... ...	... ...	2	... ...	... ...	... ...	... ...	... ...	... ...	... ...	... ...	... ...	... ...	... ...	4†
... ...	... ...	... ...	2	... ...	... ...	... ...	... ...	... ...	... ...	... ...	... ...	... ...	... ...	... ...	... ...
... ...	... ...	... ...	2	... ...	... ...	... ...	... ...	... ...	... ...	... ...	... ...	... ...	... ...	... ...	... ...
... ...	... ...	... ...	2	... ...	... ...	... ...	... ...	... ...	... ...	... ...	... ...	... ...	... ...	... ...	... ...
... ...	... ...	... ...	2	... ...	... ...	... ...	... ...	... ...	... ...	... ...	... ...	... ...	... ...	... ...	2
... ...	... ...	... ...	2	... ...	... ...	... ...	... ...	... ...	... ...	... ...	... ...	... ...	... ...	... ...	2†
... ...	... ...	... ...	1	... ...	... ...	... ...	... ...	... ...	... ...	... ...	... ...	... ...	... ...	... ...	... ...
... ...	... ...	... ...	2	... ...	... ...	... ...	... ...	... ...	... ...	... ...	... ...	... ...	... ...	... ...	1
... ...	... ...	... ...	1	... ...	... ...	... ...	... ...	... ...	... ...	... ...	... ...	... ...	... ...	... ...	1
... ...	... ...	... ...	1	... ...	... ...	... ...	... ...	... ...	... ...	... ...	... ...	... ...	... ...	... ...	1
... ...	... ...	... ...	1	... ...	... ...	... ...	... ...	... ...	... ...	... ...	... ...	... ...	... ...	... ...	... ...
... ...	... ...	... ...	... ...	... ...	... ...	... ...	... ...	... ...	... ...	... ...	... ...	... ...	... ...	... ...	2†
... ...	... ...	... ...	... ...	... ...	... ...	... ...	... ...	... ...	... ...	... ...	... ...	... ...	... ...	... ...	2†
... ...	... ...	... ...	... ...	... ...	... ...	... ...	... ...	... ...	... ...	... ...	... ...	... ...	... ...	... ...	2†
... ...	... ...	... ...	... ...	... ...	... ...	... ...	... ...	... ...	... ...	... ...	... ...	... ...	... ...	1	... ...
... ...	... ...	... ...	... ...	... ...	... ...	... ...	... ...	... ...	... ...	... ...	... ...	... ...	... ...	1	... ...

for which a supply of spare is laid down, they are shown in *italics*.

38407
Equip.
1617

38407
Equip.
1617

Digitized by Google

Carriages, Garrison, R.M.L.—

Component and spare parts.	Carriages.												
		Double plate,											
		Small port.					Casemate or dwarf.						
	Casemate, 12·5 in., 38 tons, 7-ft. recoil, Mark II., II*. and III.	12·5-in., 38 tons.		10-in.	Casemate, 10-in., Mark II., low.	12·5-in., 38 tons, Mark II. and III.	12-in., 35 tons.	11 or 12-in., 25 tons.	10-in., Mark I., E.O.C.	10-in.	9-in.	7-in.
		7-ft. recoil, Mark II.	6 ft. recoil.										
Gear, Adjusting, Hydraulic Buffers.													
Brackets, metal, guide, pointer, with screws ...	...	...	...	...	...	...	...	...	...	...	...	...	...
Pins, iron, rod connecting levers, with nuts ...	...	...	...	...	...	...	...	...	...	...	...	...	...
Pointers, steel, index	...	...	...	...	...	...	...	...	...	...	...	...	...
Rods, iron, connecting levers	...	...	...	...	...	...	...	...	...	...	...	...	...
Studs { iron, lever, with nuts	...	...	...	...	...	...	...	...	...	...	...	...	...
Studs { steel { pointer, with nut, collar and pin ...	...	...	...	...	...	...	...	...	...	...	...	...	...
Studs { steel { pointer, with nut	...	...	...	...	...	...	...	...	...	...	...	...	...
Gear, Elevating.													
Arcs, elevating { iron, left	...	...	...	...	...	...	...	1	...	...	...	...	...
	...	...	...	...	...	...	...	...	...	...	1	...	...
	...	...	...	...	1	...	...	...	...	...	...	1	...
	...	...	...	...	...	...	...	...	...	...	...	...	1
	...	...	...	...	...	...	...	...	...	...	...	...	...
	...	...	...	...	...	...	...	...	...	...	...	...	...
	...	...	...	...	...	...	...	...	...	...	...	...	...
	...	...	...	...	...	...	...	...	...	...	...	...	...
	...	...	...	...	...	...	...	...	...	...	...	...	...
	...	...	...	...	...	...	...	1	...	...	...	...	...
	...	...	...	...	...	...	...	...	...	...	1	...	...
	...	...	...	...	1	...	...	...	...	...	...	1	...
	...	...	...	...	...	...	...	...	...	...	...	...	1
	...	...	...	...	...	...	...	...	...	...	...	...	...
	...	...	...	...	...	...	...	...	...	...	...	...	...
	...	...	...	...	...	...	...	...	...	...	...	...	...
	...	...	...	...	...	...	...	...	...	...	...	...	...
	...	...	...	...	...	...	...	...	...	...	...	...	...
	...	...	...	...	...	...	...	...	...	...	...	...	...
	1	...	...	...	...	1	...	...	...	...	...	...	...
	...	...	...	...	...	...	1	...	...	...	...	...	...
steel	...	...	...	...	...	...	...	...	...	...	...	...	...
	...	...	...	...	...	...	...	...	...	...	...	...	...
	...	...	...	...	...	...	...	...	...	...	...	...	...
steel { left	...	...	...	...	...	...	...	...	1	...	...	...	...
steel { right	...	...	...	...	...	...	...	...	1	...	...	...	...

.Where articles are interchangeable with others on the same line

Digitized by Google

Component and Spare parts for—*continued.*

Carriages.														Proportion of spare for each		
R.M.L.,						Single plate, R.M.L.										
						Casemate.			Dwarf.							
12·5-in. converted, small port, Mark I.	10·4-in., barbette.	10-in., Mark III.	High angle, 9-in. and 10-in., Mark III.	9-in., Mark II.	7-in., 6½ tons, 6 ft. parapet.	11 or 12-in., 25 tons.	9-in., Mark I.	9-in., Mark II.	7-in.	9-in., Mark I.	9-in., Mark II.	7-in.	Detached group of Sub-Districts, per 10 guns, or less	No. of each nature.	Sub-District. per 10 guns, or less	No. of each nature.	Fort or Battery. per 10 guns, or less	No. of each nature.
1	...	1	...	1	...	...	...	...	...	...	...	...	...	...	...	...	...	...
2	...	...	...	...	...	...	...	...	...	...	...	...	...	...	...	...	...	...
1	...	1	...	1	...	...	...	...	...	...	...	...	...	...	...	...	...	...
1	...	1	...	1	...	...	...	...	...	...	...	...	...	...	...	...	...	...
...	...	2	...	2	...	...	...	...	...	...	...	...	...	...	...	...	...	...
1	...	1	...	1	...	...	...	...	...	...	...	...	...	...	...	...	...	...
...	...	...	...	...	...	...	...	...	...	...	...	...	...	...	1	...	...	...
...	...	...	...	...	1	...	...	...	...	...	...	...	...	...	1	...	...	...
...	...	...	...	...	...	1	...	...	...	...	...	...	...	...	1	...	...	...
...	...	...	...	...	...	...	1	...	...	...	...	...	...	...	1	...	...	...
...	...	...	...	...	...	...	...	1	...	...	...	...	...	...	1	...	...	...
...	...	...	...	...	...	...	...	...	1	...	...	...	...	...	1	...	...	...
...	...	...	...	...	...	...	...	...	...	1	...	...	...	...	1	...	...	...
...	...	...	...	...	...	...	...	...	...	...	1	...	...	...	1	...	...	...
...	...	...	...	...	...	...	...	...	...	...	...	1	...	...	1	...	...	...
...	...	...	...	...	...	...	...	...	...	...	...	...	1	...	1	...	...	...
...	...	...	...	...	...	...	...	...	...	...	...	...	...	1	1	...	...	...
1	...	...	...	...	...	...	...	...	...	...	...	...	...	...	1	...	...	...
...	1	...	...	...	...	...	...	...	...	...	...	...	...	...	1	...	...	...
...	...	1	...	...	...	...	...	...	...	...	...	...	...	...	1	...	...	...
...	...	1	...	...	...	...	...	...	...	...	...	...	...	...	1	...	...	...
...	...	...	1	...	...	...	...	...	...	...	...	...	...	...	1	...	...	...
...	...	...	...	1	...	...	...	...	...	...	...	...	...	...	1	...	...	...
...	...	...	...	1	...	...	...	...	...	...	...	...	...	...	1	...	...	...

for which a supply of spare is laid down, they are shown in *italics*.

38407 Equipt. 1617

38407 Equipt. 1617

Digitized by Google

Carriages, Garrison, R.M.L.—

Component and spare parts.	Carriages.														
					Double plate,										
			Small port.				Casemate or dwarf.								
	Casemate, 12·5-in., 38 tons, 7 ft. recoil, Mark II., II*. and III.		12·5-in. 38 tons.			Casemate, 10-in., Mark II., low.	12·5-in., 38 tons, Mark II. and III.	12-in., 35 tons.	11 or 12-in., 25 tons.	10-in., Mark I., E.O.C	10-in.	9-in.	7-in.		
			7 ft. recoil, Mark II.	6 ft. recoil.	10-in.										
Cams, metal	...	...	1	1	...	...	...	...	...	...	...	...	...	...	...
Capstan heads, with feathers, iron	...	...	...	...	...	...	...	...	...	...	...	...	...	2	...
Clamps, iron ... left	...	...	...	...	...	...	...	...	...	...	...	...	...	1	...
Clamps, iron ... right	...	...	...	...	...	...	...	...	...	...	...	...	...	1	...
Collars, elevating screw iron	...	...	3	3	...	...	...	...	...	...	...	...	...	...	...
Collars, elevating screw leather	...	...	3	3	...	...	...	...	...	...	...	...	...	...	...
Cones, metal, friction with screws	...	...	1	1	...	...	...	...	...	...	...	...	...	...	...
Cramps, iron, brake, with screws	...	1†	...	...	...	...	1†	1	...	...	...	...	...	...	...
Elevation, indicator	...	...	...	...	...	...	...	...	...	...	...	...	...	...	...
Guards, metal — bracket, wheel, worm	...	...	...	...	...	...	...	...	...	...	...	...	...	...	...
Guards, metal — wheel, with screws — spur	...	1†	1	1	...	...	1†	1	...	...	...	...	...	...	...
Guards, metal — wheel, with screws — spur and pinion	...	...	1	1	...	...	...	...	...	...	...	...	...	...	...
Guards, metal — wheel, with screws — worm left	...	...	...	...	1	...	...	...	...	...	...	...	...	...	...
Guards, metal — wheel, with screws — worm right	...	...	...	...	1	...	...	...	...	...	...	...	...	...	...
Handles, iron — brake	...	1†	...	...	...	...	1†	1	...	...	...	...	...	...	...
Handles, iron — wheel, hand — with collar and nut	...	...	...	...	...	...	...	...	...	...	...	...	...	...	...
Handles, iron — wheel, hand — with nut	...	...	...	...	...	...	...	...	...	...	...	...	...	...	...
Keys, steel, driving — shaft, hand, wheel	...	...	...	...	...	...	...	...	...	...	...	...	...	...	...
Keys, steel, driving — shaft, worm	...	...	...	...	...	...	...	...	...	...	...	...	...	...	...
Levers, wrought-iron, jamming ... left	...	...	...	...	...	...	...	...	...	...	...	...	...	...	...
Levers, wrought-iron, jamming ... right	...	...	1	1	...	...	...	...	...	...	...	...	...	...	...
Links, connecting iron	...	...	...	...	2	...	...	...	...	...	...	...	...	...	...
Links, connecting steel	...	...	1	1	...	...	...	...	...	...	...	...	...	...	...
Nuts, iron, jamming, with screw	...	...	1	1	...	...	...	...	...	...	...	...	...	...	...
Nuts, steel, screw, elevating	...	...	1	1	...	...	...	...	...	...	...	...	...	...	...
Pinions, elevating, steel, with spindles — with pin, 1st motion	...	...	...	...	...	...	...	...	...	...	...	...	...	...	...
Pinions, elevating, steel, with spindles — with collar and nuts and spring	...	...	...	...	...	...	...	...	...	...	...	...	...	...	...
Pinions, elevating, steel, with spindles — with collar and nuts	...	...	...	...	...	...	...	...	...	...	...	...	...	...	...
Pinions, elevating, steel, with spindles — with collar and pin — 2nd motion	...	1†	1	1	...	...	1†	1	...	...	...	...	...	...	...
Pinions, elevating, steel, with spindles — with collar and pin — 3rd ,,	...	1†	...	...	...	...	1†	1	...	...	...	...	...	...	...
Pinions, elevating, steel, with spindles — with nut and pin, 2nd motion	...	...	...	...	...	...	...	...	...	...	...	...	...	...	...
Pinions, elevating, steel, with spindles — 3rd motion	...	...	1	1	...	...	...	...	...	...	...	...	...	...	...
Pinions, elevating, steel, with spindles — with collars and nuts — with pins — 1st motion	...	...	...	...	...	2	...	...	...	...	...	...	...	...	...
	...	...	...	...	...	...	...	...	2	...	...	...	...	...	...
	...	...	...	...	...	...	...	...	...	2	...	...	...	...	...
	...	...	...	...	...	...	...	...	...	...	2	...	...	...	...
	...	...	...	...	...	...	...	...	...	...	...	2	...	...	...
	...	...	...	...	...	...	...	...	...	...	...	...	2	...	...
	...	...	...	...	...	...	...	...	...	...	...	...	...	...	...

Where articles are interchangeable with others on the same line

† Mark II. only.

Digitized by Google

Component and Spare parts for—*continued.*

Carriages.											Proportion of spare for each		
R.M.L.						Single plate, R.M.L.							
						Casemate.			Dwarf.				
12·5-in. converted, small port, Mark I.	10·4-in., barbette.	10-in., Mark III.	High angle, 9-in. and 10-in., Mark III.	9-in., Mark II.	7-in., 6½ tons, 6 ft. parapet.	11 or 12-in., 25 tons.	9-in., Mark I.	9-in., Mark II.	7-in.	9-in., Mark I.	9-in., Mark II.	7-in.	Detached group of Sub-Districts, per 10 guns, or less No. of each nature.	Sub-District, per 10 guns, or less No. of each nature.	Fort or Battery, per 10 guns, or less No. of each nature.
...	...	...	...	...	...	...	...	...	...	...	...	...	...	...	...
...	...	...	...	...	...	...	2	...	2	2	...	2	...	...	...
...	...	...	...	...	...	...	1	...	1	1	...	1	...	...	...
...	...	...	...	...	...	...	1	...	...	...	...	...	...	...	...
...	1	...	...	...	...	...	...	...	...	...	...	...	...	...	1
...	...	...	...	...	...	...	...	...	...	...	...	...	...	...	1
1	...	...	...	...	...	...	...	...	...	...	...	...	...	...	...
...	1	...	...	...	...	...	...	...	...	...	...	...	...	...	...
...	...	...	1	...	...	...	...	...	...	...	...	...	...	...	...
1	...	...	...	2	...	...	...	...	...	...	...	...	...	...	...
...	...	...	1	...	...	...	...	...	...	...	...	...	...	...	...
...	...	...	...	...	1	...	...	...	...	...	...	...	...	...	...
...	...	...	...	...	1	...	...	...	...	...	...	...	...	...	...
...	...	...	...	...	...	...	...	...	...	...	...	...	...	...	...
...	...	...	...	...	...	...	...	...	...	...	...	...	...	...	...
...	1	...	...	...	...	...	...	...	...	...	...	...	...	...	...
1	...	...	...	...	2	...	...	...	...	...	...	...	...	1	...
...	...	...	...	...	...	...	...	...	...	...	...	...	...	1	...
...	1	...	...	...	...	...	...	...	...	...	...	...	...	1	...
...	...	...	...	...	...	...	...	...	...	...	...	...	...	1	...
...	...	...	...	...	...	...	...	...	...	...	...	...	...	1	...
...	...	...	...	...	...	...	...	...	...	...	...	...	...	1	...
...	...	...	...	...	...	...	...	...	...	...	...	...	...	1	...
...	...	...	...	...	...	...	...	...	...	...	...	...	...	1	...
...	...	...	...	...	...	...	...	...	...	...	...	...	...	1	...
...	...	...	...	...	...	...	...	...	...	...	...	...	...	1	...
...	...	2	...	...	...	...	...	...	...	...	...	...	...	1	...
...	...	...	...	2	...	...	...	...	...	...	...	...	...	1	...

for which a supply of spare is laid down, they are shown in *italics*.

Digitized by Google

Carriages, Garrison, R.M.L.—

Component and spare parts.	Carriages.													
		Double plate,												
		Small port.				Casemate or dwarf.								
	Casemate, 12·5-in., 38 tons, 7 ft. recoil, Mark II., II*. and III.	12·5-in., 38 tons. 7 ft. recoil, Mark II.	12·5-in., 38 tons. 6 ft. recoil.	10-in.	Casemate, 10-in., Mark II., low.	12·5-in., 38 tons, Mark II. and III.	12-in., 35 tons.	11 or 12-in., 25 tons.	10-in., Mark I., E.O.C.	10-in.	9-in.	7-in.
Pinions, elevating, steel, with spindles — with collar and nuts — with pins — 1st motion	...	...	...	...	...	...	...	...	...	...	...	...
Pinions, elevating, steel, with spindles — with collar and nuts — with pins — 2nd ,,	...	...	...	...	2	...	...	2	...	...	...	...
Pinions, elevating, steel, with spindles — with collar and nuts — with pins — 3rd ,, ...	...	...	...	...	...	...	...	...	2	...	...	...
Pinions, elevating, steel, with spindles — with collar and nuts — 1st motion	...	1	1	...	...	...	...	2	...	...	2	...
Pinions, elevating, steel, with spindles — with collar and nuts — bevel	1§	...	...	...	...	1§	1	...	...	...	...	...
Pinions, elevating, steel, with spindles — left	...	...	...	...	...	...	...	...	...	...	2	...
Pinions, elevating, steel, with spindle — nuts and springs	1†	...	...	...	...	1‡	...	...	...	...	...	...
Pinions, elevating, steel, with spindle — right	...	...	...	...	...	...	...	...	...	1*	...	...
Pinions, elevating, steel, with spindle — bevel, iron	...	...	...	...	...	...	...	...	...	...	...	1
Pinions, bevel, shaft, worm, manganese bronze	...	...	...	...	...	...	...	...	...	...	...	...
Pinions, iron, spur, screw, scale — bottom	...	1	1	...	...	...	...	...	...	...	...	...
Pinions, iron, spur, screw, scale — top	...	1	1	...	...	...	...	...	...	...	...	...
Pinions, metal, bevel, 18-teeth, with screws	...	1	1	...	...	...	...	...	...	...	...	...
Pinions, steel, bevel, 15 teeth — spindle wheel, hand ...	1‡	...	...	...	...	1‡	...	...	...	...	...	...
Pinions, steel, bevel, 15 teeth — spindle worm	1‡	...	...	...	...	1‡	...	...	...	...	...	...
Pins, link, connecting — steel, with taper pin	...	1	1	...	...	...	...	...	...	...	...	...
Pins, link, connecting — iron	...	...	...	2	...	...	...	...	...	...	...	...
Plates — friction, brake — iron ... ... pairs	1§	...	...	...	...	1§	1	...	...	...	...	...
Plates — friction, brake — metal	...	...	...	...	...	...	...	...	...	...	...	...
Plates — metal, yard scale	...	...	...	...	...	...	...	...	...	...	...	...

Where articles are interchangeable with others on the same line

* If fitted with capstan head elevating gear.

† For Mark II*. and III. only } demands for these parts must show the Marks of carriages to

‡ ,, ,, III. only } prevent mistakes.

§ ,, ,, II. ,,

Digitized by Google

Component and Spare parts for—*continued.*

Carriages.											Proportion of spare for each		
R.M.L.					Single plate, R.M.L.								
					Casemate.			Dwarf.					
12·5-in. converted, small port, Mark I.	10·4-in., barbette.	10-in., Mark III.	High angle, 9-in. and 10-in., Mark III.	9-in., Mark II.	7-in., 6½ tons, 6 ft. parapet.	11 or 12-in., 25 tons.	9-in., Mark I.	9-in., Mark II.	7-in.	9-in., Mark I.	9-in., Mark II.	7-in.	Detached group of Sub-Districts. per 10 guns, or less No. of each nature.	Sub-District. per 10 guns, or less No. of each nature.	Fort or Battery. per 10 guns, or less No. of each nature.
...	...	...	...	...	...	2	...	...	...	...	...	...	...	1	...
...	...	...	...	...	...	...

Carriages, Garrison, R.M.L.—

Component and spare parts.	Carriages.											
		Double plate,										
		Small port.					Casemate or dwarf.					
	Casemate 12·5-in., 38 tons, 7 ft. recoil, Mark II., II*. and III.	12·5-in., 38 tons.			Casemate, 10-in., Mark II., low.		12·5-in., 38 tons. Mark II. and III.	12-in., 25 tons.	11 or 12-in., 25 tons.	10-in., Mark I., E.O.C.	10-in.	9-in.	7-in.
		7 ft. recoil, Mark II.	6ft. recoil.	10-in.									
Plates, supporting screw scale, with screws ...	...	1	1	...	...		...	...	...	...	...	...	...
Pointers { metal, elevating arc, with screws { left ...	...	...	...	...	...		...	...	...	1	...	...	...
Pointers { metal, elevating arc, with screws { right ...	...	...	...	...	...		...	...	...	1	...	...	...
Pointers { steel, elevating, arc ...	1	...	...	...	...		1	1	...	...	...	...	...
Racks, elevating { iron { left ...	...	...	...	1	...		...	...	...	...	...	...	...
Racks, elevating { iron { right ...	...	...	...	1	...		...	...	...	...	...	...	...
Racks, elevating { steel ...	...	1	1	...	...		...	...	...	...	...	...	...
Rollers, metal, friction, with spindle, metal nuts, and steel pin	...	...	...	...	...		...	...	...	...	...	...	...
Scales, elevating { iron ...	...	1	1	...	...		...	...	...	...	2	2	...
Scales, elevating { metal { vernier, nut ...	...	1	1	...	...		...	...	...	...	...	...	...
Scales, elevating { metal { sliding ...	...	1	1	...	...		...	...	...	...	...	...	...
Screws { elevating, No. 51, with set screw ...	...	1	1	...	...		...	...	...	...	...	...	...
Screws { iron { jamming, brake ...	1‡	...	...	...	...		1‡	1	...	...	...	...	...
Screws { iron { scale, with collar and nut ...	...	1	1	...	...		...	...	...	...	...	...	...
Shafts { iron, with collars and nuts ...	...	...	...	...	...		...	...	...	...	...	...	...
Shafts { steel { hand wheel, with collars and nuts	...	...	...	...	...		...	...	...	...	...	...	...
Shafts { steel { worm ...	...	...	...	...	...		...	...	...	...	...	...	...
Shafts { steel { worm, elevating, with collars and pin	...	...	...	...	...		...	...	...	...	...	...	...
Spindles { iron, with collar, and nut, worm { left	...	...	...	1	1		...	...	1	...	1	1	...
Spindles { iron, with collar, and nut, worm { right	...	...	...	1	1		...	...	1	...	1	1	...
Spindles { steel { wheel, hand, with collars, nuts and pins	1†	...	...	...	...		1†	...	...	...	...	...	...
Spindles { steel { worm, with collars ...	1*	...	...	...	...		...	...	...	...	...	...	...
Spindles { steel { bevel wheel with collar ...	...	...	...	...	...		...	...	...	...	...	...	...
Spindles { steel { with collar and nut } worm { left	...	...	...	...	...		...	...	...	1	...	...	...
Spindles { steel { with collar and nut } worm { right	...	...	...	...	...		...	...	...	1	...	...	...
Spring, cone, friction, steel ...	...	...	...	...	...		...	...	...	...	...	...	...
Washer, spring, pinion spindle ...	...	...	...	...	...		...	...	...	...	...	...	...
Wheels { iron { hand ...	1	1	1	...	...		1	1	...	...	...	...	...
Wheels { iron { spur { 2nd motion { 51 teeth ...	...	...	...	...	...		...	...	...	...	...	...	...
Wheels { iron { spur { 2nd motion { 37 ,, ...	1‡	1	1	...	...		1‡	1	...	...	...	...	...
Wheels { iron { spur { 3rd ,, { 47 ,, ...	...	1	1	...	...		...	...	...	...	...	...	...
Wheels { iron { spur { 3rd ,, { 37 ,, ...	1‡	...	...	...	...		1‡	1	...	...	...	...	...
Wheels { M. C. I., hand, with securing loops ...	...	...	...	...	...		...	...	...	...	...	...	...
Wheels { metal { bevel ...	...	...	...	...	...		...	...	...	...	...	...	...
Wheels { metal { hand ...	...	1	1	2	2		...	2	2	2	2	2	...
Wheels { metal { spur, 56-teeth ...	...	1	1	...	...		...	...	...	...	...	...	...
Wheels { metal { worm { with friction cone, and feathers { left	...	...	...	...	...		...	...	...	2	...	...	...
Wheels { metal { worm { with friction cone, and feathers { right	...	...	...	1	1		...	...	...	...	1	...	...
Wheels { metal { worm { with 2 friction cones ...	1*	...	...	...	...		1†	...	...	...	...	...	...

Where articles are interchangeable with others on the same line demands for these parts must show the Mark of carriage to prevent mistakes.

* For Mark II*. and III. only
† For ,, III. only
‡ For ,, II. only.

Digitized by Google

Component and Spare parts for—*continued.*

Carriages.													Proportion of spare for each		
R.M.L.						Single plate, R.M.L.									
						Casemate.			Dwarf.						
12·5-in. converted, small port, Mark I.	10·4-in., barbette.	10-in., Mark III.	High angle, 9-in. and 10-in., Mark III.	9-in., Mark II.	7-in., 6¾ tons, 6 ft. parapet.	11 or 12-in., 25 tons.	9-in., Mark I.	9-in., Mark II.	7-in.	9-in., Mark I.	9-in., Mark II.	7-in.	Detached group of Sub-Districts, per 10 guns, or less No. of each nature.	Sub-District, per 10 guns, or less No. of each nature.	Fort or Battery, per 10 guns, or less No. of each nature.
...	...	...	...	...	...	...	...	...	...	...	...	...	...	...	...

Carriages, Garrison, R.M.L.—

Component and spare parts.	Carriages.														
		Double plate,													
		Small port.					Casemate or dwarf.								
	Casemate, 12·5-in., 38 tons, 7 ft. recoil, Mark II., II*. and III.	12·5-in., 38 tons.		10-in.	Casemate, 10-in., Mark II., low.		12·5-in., 38 tons, Mark II. and III.	12-in., 35 tons.	11 or 12-in., 25 tons.	10-in., Mark I., E.O.C.	10-in.	9-in.	7-in.		
		7 ft. recoil, Mark II.	6 ft. recoil.												
Wheels metal, worm, with feathers left	...	...	...	...	...	...	...	...	...	...	...	...	1	...	
Wheels metal, worm, with feathers right	...	...	...	...	...	...	...	...	...	...	...	...	1	...	
Wheels steel, mitre, hand wheel, 24 teeth	...	...	...	...	...	...	...	...	...	...	...	...	...	...	
Wheels shaft worm, 24 teeth	...	...	...	...	...	...	...	...	...	...	...	...	...	...	
GEAR, ELEVATION, INDICATOR.															
Brackets, metal, clinometer	...	...	...	...	...	...	...	...	...	...	...	...	...	...	
with screws ... drum, chain (in two pieces)	...	...	...	...	...	...	...	...	...	...	...	...	...	...	
Chain, metal, pointer, with tension spring and adjusting screw	...	...	...	...	...	...	...	...	...	...	...	...	...	...	
Disc, metal, graduated, with screws ...	...	...	...	...	...	...	...	...	...	...	...	...	...	...	
Drum, steel, chain, with collars and screws ...	...	...	...	...	...	...	...	...	...	...	...	...	...	...	
Guard, metal, disc, graduated, with screws ...	...	...	...	...	...	...	...	...	...	...	...	...	...	...	
Pointer, aluminium	...	...	...	...	...	...	...	...	...	...	...	...	...	...	
Wheel, metal, chain	...	...	...	...	...	...	...	...	...	...	...	...	...	...	
GEAR, FOLLOWING-UP.															
Bars, iron, directing, pointer, with screw	...	1	1	...	...	...	...	...	...	...	...	...	...	...	
Collars, iron, with longitudinal	...	2	2	...	...	...	...	...	...	...	...	...	...	...	
screws, shaft ... ... winch handle	...	2	2	...	...	...	...	...	...	...	...	...	...	...	
Covers, iron with screws worm, shaft, left	...	1	1	...	...	...	...	...	...	...	...	...	...	...	
Covers, iron with screws longitudinal right	...	1	1	...	...	...	...	...	...	...	...	...	...	...	
Covers, iron with screws worm, wheel	...	2	2	...	...	...	...	...	...	...	...	...	...	...	
Guides, iron, with screws, bar, directing, pointer ...	...	1	1	...	...	...	...	...	...	...	...	...	...	...	
Handles, iron, winch, No. 1	...	2	2	...	...	...	...	...	...	...	...	...	...	...	
Keys, iron, driving, shaft	...	2	2	...	...	...	...	...	...	...	...	...	...	...	
Pinions, metal, longitudinal, 16 teeth ...	...	2	2	...	...	...	...	...	...	...	...	...	...	...	
bevel, shaft ... winch handle, 20 teeth ...	...	2	2	...	...	...	...	...	...	...	...	...	...	...	
Plates, metal, indicator, with screws ...	...	1	1	...	...	...	...	...	...	...	...	...	...	...	
Pointers, steel, indicator	...	1	1	...	...	...	...	...	...	...	...	...	...	...	
Screws, iron, following-up left	...	1	1	...	...	...	...	...	...	...	...	...	...	...	
Screws, iron, following-up right	...	1	1	...	...	...	...	...	...	...	...	...	...	...	
Shafts, iron... longitudinal left	...	1	1	...	...	...	...	...	...	...	...	...	...	...	
Shafts, iron... longitudinal right	...	1	1	...	...	...	...	...	...	...	...	...	...	...	
Shafts, iron... winch handle	...	1	1	...	...	...	...	...	...	...	...	...	...	...	

Where articles are interchangeable with others on the same line

Digitized by Google

Component and Spare parts for—*continued.*

Carriages.										Proportion of spare for each		
R.M.L						Single plate, R.M.L.						
						Casemate.		Dwarf.				
12·5-in. converted, small port, Mark I.	10·4-in., barbette.	10-in., Mark III.	High angle 9-in. and 10-in., Mark III.	9-in., Mark II.	7-in., 6½ tons, 6 ft. parapet.	11 or 12-in., 25 tons.	9-in., Mark I.	9-in., Mark II.	7-in.	9-in., Mark I.	9-in., Mark II.	7-in.	Detached group of Sub-Districts. per 10 guns, or less No. of each nature.	Sub-District. per 10 guns, or less No. of each nature.	Fort or Battery. per 10 guns, or less No. of each nature.
...	...	...	...	...	...	...	...	...	...	...	...	...	...	...	...
...	...	...	1

Carriages, Garrison, R.M.L.—

Component and spare parts.	Carriages												
		Double plate,											
		Small port.					Casemate or dwarf.						
	Casemate, 12·5-in., 38 tons, 7 ft. recoil, Mark II., II.* and III.	12·5-in., 38 tons.		10-in.	Casemate, 10-in., Mark II., low.	12·5-in., 38 tons, Mark II. and III.	12-in., 35 tons.	11 or 12-in., 25 tons.	10-in. Mark I., E O.C	10-in.	9-in.	7-in.
		7 ft. recoil, Mark II.	6 ft. recoil.									
Wheels, metal, worm, screw, following-up ... left	...	1	1	...	...	...	...	...	...	...	...	...
Wheels, metal, worm, screw, following-up ... right	...	1	1	...	...	...	...	...	...	...	...	...
Worms, iron, shaft, longitudinal ... left	...	1	1	...	...	...	...	...	...	...	...	...
Worms, iron, shaft, longitudinal ... right	...	1	1	...	...	...	...	...	...	...	...	...
GEAR, LIFTING.												
Bars, metal, directing, pointer, with screws	...	...	...	1	...	...	...	...	...	...	...	...
Blocks, iron, trunnion ... left	...	...	...	1	...	...	...	...	...	...	...	...
Blocks, iron, trunnion ... right	...	...	...	1	...	...	...	...	...	...	...	...
Capsquares, iron, with loops and screws ... left	...	...	...	1	...	...	...	...	...	...	...	...
Capsquares, iron, with loops and screws ... right	...	...	...	1	...	...	...	...	...	...	...	...
Collars, iron, with screws, shaft ... wheel, spur, and pinion	...	...	...	2	...	...	...	...	...	...	...	...
Collars, iron, with screws, shaft ... winch handle	...	...	...	4	...	...	...	...	...	...	...	...
Guards, metal, wheel bevel ... ... left	...	...	...	1	...	...	...	...	...	...	...	...
Guards, metal, wheel bevel ... ... right	...	...	...	1	...	...	...	...	...	...	...	...
Guards, metal, wheel spur and pinion ... left	...	...	...	1	...	...	...	...	...	...	...	...
Guards, metal, wheel spur and pinion ... right	...	...	...	1	...	...	...	...	...	...	...	...
Guides, iron, with screw, bar, directing, pointer	...	...	...	1	...	...	...	...	...	...	...	...
Handles, winch, No. 2	...	...	...	1	...	...	...	...	...	...	...	...
Keys, iron, driving, shaft	...	...	...	6	...	...	...	...	...	...	...	...
Lifts hydraulic, with lever, complete ...	...	1	1	...	...	...	...	...	...	...	...	...
Lifts hydraulic, with lever, complete ...	...	...	...	1	...	...	...	...	...	...	...	...
Lifts packing, leather, plunger, pump, cap	...	1	1	...	...	...	...	...	...	...	...	...
Lifts packing, leather, plunger, pump, cap	...	...	...	1	...	...	...	...	...	...	...	...
Lifts packing, leather, ram	...	1	1	...	...	...	...	...	...	...	...	...
Lifts packing, leather, ram	...	...	...	1	...	...	...	...	...	...	...	...
Lifts plungers	...	1	1	...	...	...	...	...	...	...	...	...
Lifts plungers	...	...	...	1	...	...	...	...	...	...	...	...
Lifts springs, valve, inlet	...	1	1	...	...	...	...	...	...	...	...	...
Lifts springs, valve, inlet	...	...	...	1	...	...	...	...	...	...	...	...
Lifts springs, valve, outlet	...	1	1	...	...	...	...	...	...	...	...	...
Lifts springs, valve, outlet	...	...	...	1	...	...	...	...	...	...	...	...
Lifts valves, inlet	...	1	1	...	...	...	...	...	...	...	...	...
Lifts valves, inlet	...	...	...	1	...	...	...	...	...	...	...	...
Lifts valves, outlet	...	1	1	...	...	...	...	...	...	...	...	...
Lifts valves, outlet	...	...	...	1	...	...	...	...	...	...	...	...
Pinions bevel, in cast-iron or steel, 13 teeth	...	...	...	2	...	...	...	...	...	...	...	...
Pinions bevel, iron, 11 teeth	...	...	...	2	...	...	...	...	...	...	...	...
Pinions iron, spur, 12 teeth	...	...	...	2	...	...	...	...	...	...	...	...

Where articles are interchangeable with others on the same line

Digitized by Google

Component and Spare parts for—*continued.*

Carriages.										Proportion of spare for each		
R.M.L.					Single plate, R.M.L.							
					Casemate.			Dwarf.				
12·5-in. converted, small port, Mark I.	10·4-in., barbette.	10-in., Mark III.	High angle, 9-in. and 10-in., Mark III.	9-in., Mark II.	11 or 12-in., 25 tons.	9-in., Mark I.	9-in., Mark II.	7-in.	9-in., Mark I.	9-in., Mark II.	7-in.	Detached group of Sub-Districts. per 10 guns, or less No. of each nature.	Sub-District. per 10 guns, or less No. of each nature.	Fort or Battery per 10 guns, or less No. of each nature.
...	...	...	...	...	...	...	...	...	...	...	...	...	...	...

Carriages, Garrison, R.M.L.—

Component and spare parts.	Carriages.											
		Small port.				Double plate, Csemate or dwarf						
	Casemate, 12·5-in., 38 tons, 7 ft. recoil, Mark II., II.* and III.	12·5-in., 38 tons. 7 ft. recoil, Mark II.	12·5-in., 38 tons. 6 ft. recoil.	10-in.	Casemate, 10-in., Mark II., low.	12·5-in., 38 tons, Mark II. and III.	12-in., 35 tons.	11 or 12-in., 25 tons.	10-in., Mark I., E.O.C.	10-in.	9-in.	7-in.
Plates, metal, trunnion, pointer, with screws	left	...	1	1	...	...	...	...	...	...	...	...	...
	right	...	1	1	...	...	...	...	...	...	...	...	...
Pointers ... metal, trunnion	left	...	1	1	...	...	...	...	...	...	...	...	...
	right	...	1	1	...	...	...	...	...	...	...	...	...
iron, indicator		...	...	...	1	...	...	...	...	...	...	...	...
Scales, metal, trunnion	left	...	1	1	...	...	...	...	...	...	...	...	...
	right	...	1	1	...	...	...	...	...	...	...	...	...
Screws, iron, lifting	left	...	...	...	1	...	...	...	...	...	...	...	...
	right	...	...	...	1	...	...	...	...	...	...	...	...
Shafts ... iron, cross, wheel	bevel, with pinion	...	...	...	2	...	...	...	...	...	...	...	...
	spur and pinion	...	...	...	1	...	...	...	...	...	...	...	...
	longitudinal	...	...	...	2	...	...	...	...	...	...	...	...
steel, winch handle		...	...	...	2	...	...	...	...	...	...	...	...
Wheels bevel	32 teeth	...	...	...	2	...	...	...	...	...	...	...	...
	and pinion, 28 and 12 teeth ...	...	...	...	2	...	...	...	...	...	...	...	...
spur, and bevel pinion, 36 and 13 teeth		...	...	...	2	...	...	...	...	...	...	...	...
GEAR, NIPPING.													
Blocks, nipping, lever with metal sheave		...	1	1	...	...	...	...	...	...	...	...	...
Collars, iron, with screws, cross, shaft		...	1	1	...	...	...	...	...	...	...	...	...
Counterweights, iron, lifting		1	...	...	...	...	1	1	...	...	...	...	...
with bolts, lever	nipping	...	1	1	...	...	...	...	...	...	...	...	...
Covers, iron, with screws, pinion, segment... ...		...	1	1	...	...	...	...	...	...	...	...	...
Keys, iron, driving, shaft		2	2	2	...	...	2	2	...	...	...	...	...
Levers, iron		...	1	1	...	...	...	...	...	...	...	...	...
nipping, with pin		1	...	...	...	...	1	1	...	...	...	...	...
lifting, with collar and split key ...	left ...	...	...	...	...	...	...	...	...	...	...	...	...
	right ...	1	1	1	...	...	1	1	...	...	...	...	...
Links, iron connecting...	left ...	2	2	2	...	...	2	2	...	...	...	...	...
	right ...	2	2	2	...	...	2	2	...	...	...	...	...
Pawls, iron, retaining, lever, nipping		1	1	1	...	...	1	1	...	...	...	...	...
Pinions, metal, segment, with screw...	left ...	...	1	1	...	...	...	...	...	...	...	...	...
	right ...	...	1	1	...	...	...	...	...	...	...	...	...
Pins, iron, with collar and split key	lever ...	...	...	...	...	...	...	...	...	...	...	...	...
	connecting links	...	2	2	...	...	...	...	...	...	...	...	...
		4	...	...	...	...	4	4	...	...	...	...	...
	rod or link, eccentric	...	..	...	...	...	...	...	...	...	...	...	...
		1	...	...	...	...	1	1	...	...	...	...	...

Where articles are interchangeable with others on the same line

Digitized by Google

Component and Spare parts for—*continued.*

Carriages.										Proportion of spare for each.		
R.M.L.					Single plate, R.M.L.							
					Casemate.			Dwarf.				
15·5-in. converted, small port, Mark I.	10·4 in., barbette.	10-in., Mark III.	High angle 9-in. and 10-in., Mark III.	9 in., Mark II.	11 or 12-in., 25 tons.	9-in., Mark I.	9-in., Mark II.	7-in.	9-in., Mark I.	9-in., Mark II.	7-in.	Detached group of Sub-Districts, per 10 guns, or less No. of each nature.	Sub-District, per 10 guns, or less No. of each nature.	Fort or Battery, per 10 guns, or less No. of each nature.
1														
1														
1														
2														
1													1	
1													1	
1														
1														
1														
1														
1													1	
													1	
													1	

Carriages, Garrison, R.M.L.—

Component and spare parts.	Carriages.												
		Double plate,											
		Small port.					Casemate or dwarf.						
	Casemate, 12·5-in., 38 tons, 7 ft. recoil, Marks II, II*, and III.	12·5 in., 38 tons.		10-in.	Casement, 10-in., Mark II., low.		12·5-in., 38 tons, Marks II and III.	12-in., 35 tons.	11 or 12-in., 25 tons.	10-in., Mark I., E.O.C.			
		7 ft. recoil, Mark II.	6ft. recoil.							10-in.	9-in.	7-in.	
Plates, iron ... ... guide	2	2	2	...	...		2	2	...	...	...	...	
Plates, iron ... ... sprocket ...	...	2	2	...	...		...	...	...	...	...	...	
	2	...	...	...	...		2	2	...	...	...	...	
Rods, iron, or link, eccentric with keep screw ...	...	...	...	...	...		...	...	...	...	...	...	
Shafts, iron, cross ... ... left ...	1	...	...	...	...		1	1	...	...	...	...	
Shafts, iron, cross ... ... right ...	1	...	...	...	...		1	1	...	...	...	...	
Spindles, iron, eccentric	...	1	1	...	...		...	...	...	...	...	...	
Tumblers, steel, with collars and split keys ...	1	...	...	...	...		...	...	...	...	...	...	
	...	2	2	...	...		...	...	...	...	...	...	
GEAR PREVENTOR.													
Blocks, metal, jamming	1	1	1	...	...		1	...	...	...	...	...	
Collars, iron, adjusting compressor lever	1	...	...	...	...		1	...	...	...	...	...	
Levers, iron compressor	1	1	1	...	...		1	...	...	...	...	...	
Levers, iron rocking, with keep screw	1	1	1	...	...		1	...	...	...	...	...	
Links, iron, connecting	...	2	2	...	...		...	...	...	...	...	...	
Nuts, metal, compressor	1	1	1	...	...		1	...	...	...	...	...	
Pins, iron block, jamming	1	1	1	...	...		1	...	...	...	...	...	
Pins, iron link, connecting, with split key ...	...	1	1	...	...		...	...	...	...	...	...	
Pins, iron joint rocking lever	...	1	1	...	...		...	...	...	...	...	...	
Pins, iron joint rocking lever, with split key	1	...	...	...	...		1	...	...	...	...	...	
Screws, iron compressor, with collar, nut and key	1	1	1	...	...		1	...	...	...	...	...	
Tumblers, iron, nut, screw compressor, with collars and keys	...	1	1	...	...		...	...	...	...	...	...	
GEAR, RUNNING-UP.													
	2	...	...	...	...		2	2	...	...	...	...	
	...	2	2	...	...		...	...	...	...	...	...	
	...	...	...	2	...		...	...	2	...	2	...	
	...	...	...	...	...		...	...	...	...	...	2	
Axles, iron, roller, front, with split keys ...	...	...	...	...	...		...	...	...	...	...	...	2
	...	...	...	...	2		...	...	...	...	...	...	
	...	...	...	...	...		...	...	...	...	...	...	
	...	...	...	...	...		...	...	...	...	...	...	
	...	...	...	...	...		...	...	...	...	...	...	

Where articles are interchangeable with others on the same line

Digitized by Google

Component and Spare parts for—*continued.*

Carriages.												Proportion of spare for each		
R.M.L.					Single plate, R.M.L.									
					Casemate.				Dwarf.					
15·5-in. converted, small port, Mark I.	10·4-in., barbette.	10-in., Mark III.	High angle, 9-in. and 10-in., Mark III.	9-in., Mark II.	11 or 12-in., 25 tons.	9-in., Mark I.	9-in., Mark II.	7-in.	9-in., Mark I.	9-in., Mark II.	7-in.	Detached group of Sub-Districts, per 10 guns, or less No. of each nature.	Sub-District, per 10 guns, or less No. of each nature.	Fort or Battery, per 10 guns, or less No. of each nature.
2	...	...	...	...	...	...	...	...	...	...	...	...	...	...
2	...	...	...	...	...	...	...	...	...	...	...	1	...	...
1	...	...	...	...	...	...	...	...	...	...	...	1	...	...
1	...	...	...	...	...	...	...	...	...	...	...	1	...	...
2	...	...	...	...	...	...	...	...	...	...	...	...	...	...
1	...	...	...	...	...	...	...	...	...	...	...	...	...	...
1	...	...	...	...	...	...	...	...	...	...	...	...	...	...
1	...	...	...	...	...	...	...	...	...	...	...	...	...	...
1	...	...	...	...	...	...	...	...	...	...	...	...	...	...
1	...	...	...	...	...	...	...	...	...	...	...	...	...	...
1	...	...	...	...	...	...	...	...	...	...	...	...	...	...
2	...	...	...	...	2	2	2	2	2	2	2	...	...	...

for which a supply of spare is laid down, they are shown in *italics*.

38407
Equipt.
1617

38407
Equipt.
1617

Digitized by Google

Carriages, Garrison, R.M.L.—

Component and spare parts.	Carriages.										
		Double plate,									
		Small port.				Casemate or dwarf.					
	Casemate, 12·5 in., 38 tons, 7 ft. recoil, Mark II, II* and III.	12·5-in., 38 tons.			Casemate, 10-in., Mark II., low.	12·5-in., 38 tons, Mark II and III	12-in., 35 tons.	11 or 12-in., 25 tons.	10-in., Mark I. F.O.C.	10-in.	9-in.	7-in.
		7 ft. recoil, Mark II.	6 ft. recoil.	10-in.								
Axles, iron, roller — front, with collars and split keys	...	...	...	...	...	...	...		2	...	...	...
Axles, iron, roller — rear, eccentric, with split keys	...	...	...	...	...	...	...	...	...	...	...	...
Axles, iron, roller — rear, eccentric	...	...	...	...	...	...	...	...	...	...	...	2*
Jacks, lifting, hydraulic, rear roller, with lever and release valve	1†	1	1	...	...	1†	1†	...	...	...	.	.
Keys, wrought-iron ... driving, shaft	1	1	1	...	...	1	1	...	...	...	...	..
Keys, wrought-iron ... securing axles, eccentric...	...	...	...	...	...	...	...	...	...	...	...	..
Levers, wrought-iron, connecting, hydraulic, rear eccentric, shaft, with pins	... 1	1 ...	1 ...	... ...	... ...	1	1	...	...	...	...	...
Packings, leather, jack hydraulic, rear roller, set (of 11)...	1	1	1	...	...	1	1	...	..	...	...	...
Pointers, steel, shaft, eccentric, with screws ...	1	...	...	...	...	1	1	...	...	...	...	...
Rollers, carriage — No. 23	2	...	...	...	...	2	2	...	...	...	...	...
Rollers, carriage — ,, 24	...	2	2	...	...	...	...	...	...	...	...	..
Rollers, carriage — ,, 28	...	...	...	2	...	...	...	...	...	...	...	...
Rollers, carriage — ,, 27	...	...	...	...	2	...	...	...	...	...	...	...
Rollers, carriage — ,, 25 front	...	...	...	...	...	...	...	2	...	2	2	...
Rollers, carriage — ,, 29	...	...	...	...	...	...	...	...	...	...	...	2
Rollers, carriage — ,, 26	...	...	...	...	...	...	...	...	...	...	...	...
Rollers, carriage — ,, 30	...	...	...	...	...	...	...	...	...	...	...	...
Rollers, carriage — ,, 33	...	...	...	...	...	...	...	...	2	...	...	...
Rollers, carriage — ,, 67	...	2	2	...	...	...	...	...	...	...	...	...
Rollers, carriage — ,, 70	...	...	...	2	...	...	...	...	...	...	...	...
Rollers, carriage — ,, 66	2	...	...	...	...	2	2	...	...	...	...	...
Rollers, carriage — ,, 68 rear	...	...	...	...	2	...	...	2	2	2	2	...
Rollers, carriage — ,, 71	...	...	...	...	...	...	...	...	...	...	...	2
Rollers, carriage — ,, 69	...	...	...	...	...	...	...	...	...	...	...	...
Rollers, carriage — ,, 72	...	...	...	...	...	...	...	...	...	...	...	...
Shafts, iron, eccentric, rear, double, with — coupling	... 1	1 ...	1 ...	... ...	... ...	1	1	...	...	...	...	...
Shafts, iron, eccentric, rear, double, with — coupling, and split keys	...	...	...	1	...	...	...	...	...	...	...	...
Shafts, iron, eccentric, rear, double, with	...	...	...	...	...	...	...	1	...	...	...	...
Shafts, iron, eccentric, rear, double, with	...	...	...	...	1	...	...	...	...	...	...	...
Shafts, iron, eccentric, rear, double, with — split keys	...	...	...	...	...	...	...	...	...	1	...	...
	...	...	...	...	...	...	...	...	...	...	1	...
	...	...	...	...	...	...	...	...	1	...	...	...
	...	...	...	...	...	...	...	...	...	...	...	...
	...	...	...	...	...	...	...	...	...	...	...	...

Where articles are interchangeable with others on the same line

* If fitted with bar, connecting. † With spanner when fitted outside, lowering.

Digitized by Google

Component and Spare parts for—*continued.*

Carriages.												Proportion of spare for each		
R.M.L.					Single plate, R.M.L.									
					Casemate.				Dwarf.					
12·5-in converted, small port, Mark I.	10·4-in., barbette.	10-in. Mark III.	High angle, 9-in. and 10-in., Mark III.	9-in., Mark II.	11 or 12-in., 25 tons.	9-in., Mark I.	9-in., Mark II.	7-in.	9-in., Mark I.	9-in., Mark II.	7-in.	Detached group of Sub-Districts. per 10 guns, or less No. of each nature.	Sub-District. per 10 guns, or less No. of each nature.	Fort or Battery. per 10 guns, or less No. of each nature.
...	...	...	...	...	...	...	...	...	...	...	...	...	...	...
...	...	...	...	...	...	...	...	2	...	...	2	1	...	...
...	...	...	...	...	...	...	...	...	...	...	...	1	...	...
1	...	...	...	...	...	...	...	...	...	...	...	...	...	1 per gun.
1	...	...	...	...	...	...	...	...	...	...	...	...	...	1 for 12·5-in. 15°
...	...	...	...	...	...	...	...	4	...	...	4	...	...	
1	...	...	...	...	...	...	...	...	...	...	...	1	...	
...	...	...	...	...	...	...	...	...	...	...	...	1	...	
1	...	...	...	...	...	...	...	...	...	...	...	...	...	2 for 38 and 35 tons.
1	...	...	...	...	...	...	...	...	...	...	...	...	...	...
...	...	...	...	...	...	...	...	...	...	...	...	...	...	...
2	...	...	...	...	...	...	...	...	...	...	...	...	...	...
...	...	...	...	...	...	...	...	...	...	...	...	...	...	...
...	...	...	...	...	...	...	...	...	...	...	...	...	...	...
...	...	2	...	2	...	...	...	...	...	...	...	...	...	...
...	...	...	...	...	2	2	...	...	2	...	...	...	...	...
...	...	...	...	...	...	...	...	...	...	...	...	...	...	...
...	...	...	...	...	...	...	...	2	...	...	2	...	...	...
2	...	...	...	...	...	...	...	...	...	...	...	1	...	...
...	...	...	...	...	...	...	...	...	...	...	...	1	...	...
...	...	...	...	...	...	...	...	...	...	...	...	1	...	...
...	...	2	...	2	...	...	...	...	...	...	...	1	...	...
...	...	...	...	...	2	2	...	...	2	...	...	1	...	...
...	...	...	...	...	...	...	...	2	...	...	2	1	...	...
...	...	...	...	...	...	...	...	...	...	...	...	1	...	...
1	...	...	...	...	...	...	...	...	...	...	...	1	...	...
...	...	...	...	...	...	1	...	...	1	...	...	1	...	...
...	...	...	...	...	1	...	...	...	...	...	...	1	...	...
...	...	...	...	...	...	...	...	...	...	...	...	1	...	...
...	...	...	...	...	...	...	...	...	...	...	...	1	...	...
...	...	...	...	...	...	...	...	...	...	...	...	1	...	...
...	...	...	...	...	...	...	...	...	...	...	...	1	...	...
...	...	1	...	...	...	...	...	...	...	...	...	...	...	...
...	...	...	...	1	...	...	...	...	...	...	...	...	...	...

for which a supply of spare is laid down, they are shown in *italics.*

38407 / Equip. / 1617

38407 / Equip. / 1617

Digitized by Google

Carriages, Garrison, R.M.L.—

Component and spare parts.	Carriages.												
		Double plate,											
		Small port.					Casemate or dwarf.						
	Casemate, 12·5-in., 38 tons, 7 ft. recoil, Marks II, II*, and III.	12·5-in., 38 tons.		10-in.	Casemate, 10-in., Mark II., low.	12·5-in., 38 tons, Marks II and III.	12-in., 35 tons.	11 or 12-in., 25 tons.	10-in., Mark I., E.O.C.	10-in.	9-in.	7-in.	
		7 ft. recoil, Mark II.	6 ft. recoil.										
Sockets, iron { bar, connecting	...	...	...	...	...	...	...	...	...	...	...	...	2*
Sockets, iron { lever, with pawl, pin, and split key { No. 1, left	...	...	...	...	1	...	...	...	1	1	1	1	1
Sockets, iron { lever, with pawl, pin, and split key { ,, 2, right	...	...	...	...	1	...	...	...	1	1	1	1	1
Sockets, iron { lever, with pawl, pin, and split key { ,, 3, left	...	...	...	1	...	...	...	...	...	...	...	...	...
Sockets, iron { lever, with pawl, pin, and split key { ,, 4, right	...	...	...	1	...	...	...	...	...	...	...	...	...
Sockets, iron { lever, with pawl, pin, and split key { ,, 8	...	...	...	...	...	...	...	...	...	...	...	...	...
Spindles, steel, jack hydraulic, rear roller	...	1	1	1	...	...	1	1	...	...	...	...	...
Valves, release, jack, hydraulic, rear roller	...	1†	...	...	...	...	1‡	1‡	...	...	...	...	...
GEAR, TRAVERSING.													
Covers, iron, pinion, with screws { 1st motion	...	...	...	...	...	...	...	...	...	...	...	...	...
Covers, iron, pinion, with screws { 2nd ,,	...	...	...	...	...	...	...	...	...	...	...	...	...
Pinions, steel { spindle, bevel, 1st motion, 12 teeth	...	...	...	...	...	...	...	...	...	...	...	...	...
Pinions, steel { spur, 2nd motion, 14 teeth	...	...	...	...	...	...	...	...	...	...	...	...	...
Plates, metal, arrow, with screws	...	...	...	...	...	...	...	...	...	...	...	...	...
Screws, metal { boss-head, pinion, covers, ⅜-inch	...	...	...	...	...	...	...	...	...	...	...	...	...
Screws, metal { thumb, lubricating, ⅜-inch	...	...	...	...	...	...	...	...	...	...	...	...	...
Shafts, steel, 2nd motion, with nuts and pins	...	...	...	...	...	...	...	...	...	...	...	...	...
Wheels { iron, hand	...	...	...	...	...	...	...	...	...	...	...	...	...
Wheels { steel, bevel, 2nd motion, 36 teeth	...	...	...	...	...	...	...	...	...	...	...	...	...
RACER, WITH RACK.													
Bolts, holding-down, iron, with nuts { inner	...	...	...	...	...	...	...	...	...	...	...	...	...
Bolts, holding-down, iron, with nuts { outer	...	...	...	...	...	...	...	...	...	...	...	...	...
Plates, holding-down, steel	...	...	...	...	...	...	...	...	...	...	...	...	...
Racks, traversing, steel, with screws	...	...	...	...	...	...	...	...	...	...	...	...	...
Racer, steel	...	...	...	...	...	...	...	...	...	...	...	...	...

Where articles are interchangeable with others on the same line

* If fitted with bar, connecting. † With spanner when fitted outside, lowering.

‡ When the jacks are fitted with outside lowering arrangement.

§ Per carriage.

Digitized by Google

Component and Spare parts for—*continued*.

Carriages.												Proportion of spare for each		
R.M.L.					Single plate, R.M.L.									
					Casemate.			Dwarf.						
12·5-in. converted, small port, Mark I.	10·4-in., barbette.	10-in. Mark III.	High angle, 9-in. and 10-in., Mark III.	9-in., Mark II.	11 or 12-in., 25 tons.	9-in., Mark I.	9-in., Mark II.	7-in.	9-in., Mark I.	9-in., Mark II.	7-in.	Detached group of Sub-Districts, per 10 guns, or less No. of each nature.	Sub-District, per 10 guns, or less No. of each nature.	Fort or Battery, per 10 guns, or less No. of each natnre.
...	...	...	...	...	...	...	...	...	...	...	...	...	...	2
...	...	1	...	1	1	1	...	...	1	...	...	...	...	1
...	...	1	...	1	1	1	...	...	1	...	...	...	...	1
...	...	...	...	...	...	...	...	...	...	...	...	...	...	1
...	...	...	...	...	...	...	...	...	...	...	...	...	...	1
...	...	...	...	...	...	...	...	*2*	...	...	*2*	...	...	2
1	...	...	...	...	...	...	...	...	...	...	...	...	...	2 for 38 and 35 tons.
...	...	...	...	...	...	...	...	...	...	...	...	...	...	2
...	...	...	2	...	...	...	...	...	...	...	...	...	...	...
...	...	...	2	...	...	...	...	...	...	...	...	...	...	...
...	...	...	2	...	...	...	...	...	...	...	...	...	...	...
...	...	...	4	...	...	...	...	...	...	...	...	...	...	...
...	...	...	8	...	...	...	...	...	...	...	...	...	...	2$
...	...	...	2	...	...	...	...	...	...	...	...	...	...	1$
...	...	...	2	...	...	...	...	...	...	...	...	...	...	...
...	...	...	2	...	...	...	...	...	...	...	...	...	...	...
...	...	...	15	...	...	...	...	...	...	...	...	...	...	...
...	...	...	30	...	...	...	...	...	...	...	...	...	...	...
...	...	...	5	...	...	...	...	...	...	...	...	...	...	...
...	...	...	1	...	...	...	...	...	...	...	...	...	...	...
...	...	...	1	...	...	...	...	...	...	...	...	...	...	...

for which a supply of spare is laid down, they are shown in *italics*.

38407 Equip. 1617

Digitized by Google

Carriages, Garrison, R.M.L.—

| Component and spare parts. | Carriages. | | |

Component and Spare parts for—*continued.*

Carriages.												Proportion of spare for each		
R.M.L.					Single plate, R.M.L.									
					Casemate.				Dwarf.					
12·5-in. converted, small port, Mark I.	10·4-in. barbette.	10-in., Mark III.	High angle, 9·in. and 10-in., Mark III.	9-in., Mark II.	11 or 12-in., 25 tons.	9-in., Mark I.	9-in., Mark II.	7-in.	9-in., Mark I.	9-in., Mark II.	7-in.	Detached group of Sub-Districts, per 10 guns, or less No. of each nature.	Sub-District, per 10 guns, or less No. of each nature.	Fort or Battery, per 10 guns, or less No. of each nature.
...	...	...	2	...	...	...	...	...	...	...	...	...	...	...
...	...	...	4	...	...	...	...	...	...	...	...	...	...	...
...	...	...	1	...	...	...	...	...	...	...	...	...	...	...
...	...	...	1	...	...	...	...	...	...	...	...	...	...	...
...	...	...	1	...	...	...	...	...	...	...	...	...	...	...
...	...	...	1	...	...	...	...	...	...	...	...	...	...	...
...	...	...	1	...	...	...	...	...	...	...	...	...	...	...
...	...	...	1	...	...	...	...	...	...	...	...	...	...	...
...	...	...	4	...	...	...	...	...	...	...	...	...	...	1†
...	...	...	1	...	...	...	...	...	...	...	...	...	...	1†
...	...	...	4	...	...	...	...	...	...	...	...	...	...	...

for which a supply of spare is laid down, they are shown in *italics.*

38407 Equip. 1617

38407 Equip. 1617

Digitized by Google

SLIDES, L. R.M.L.—COMPONENT

38407 Equipment 1511 57 Dover 2767 57 Gen. No. 4333 57 Devonport 5011	Component and spare parts.	Slides, L.																										
		Small port.			Casemate, R.M.L.																							
					To work within length.				12·5-in., 38 tons.			11 or 12-in., 25 tons.		10 in.			9-in.			Single plate.							
		12·5-in., 38 tons.			10-in.				6 ft. recoil.																			
		7 ft. recoil.	6 ft. recoil, Marks II. and III.	10-in.	11 or 12-in., 25 tons.	Mark I.	Mark II.	Special.	9-in.	7 ft. recoil.	Marks II. and III.	Mark III., special.	Side.	Rear.	Side.	Rear.	Mark II.	Side.	Rear.	7·4in.	11 or 12-in., 25 tons, to work within length.	9-in.	7-in.	R.M.L. 10.4-in., barbette.				
Axles, steel, truck	**Axles**, roller, rear, with nuts ...	...	...	...	...	...	...	...	...	...	...	...	...	...	...	...	...	...	...	...	...	...	...	2				
	with nut and key — front	2	2	...	...	...	...	...	...	2	2	2	...	...	...	...	...	...	...	...	...	...	...	...				
	with nut and key — rear	2	2	...	...	...	...	...	...	2	2	2	...	...	...	...	...	...	...	...	...	...	...	...				
	with collars and keys — plain, front	...	...	2	...	...	...	...	...	...	...	...	2	2	...	...	...	...	...	...	2	...	...	...				
	with collars and keys — front or rear ...	...	...	...	...	...	...	...	...	...	...	...	...	...	...	...	...	...	...	...	...	...	...	...				
	with collars and keys — bevel wheel, rear ...	...	...	2	...	...	...	...	...	...	...	...	2	2	...	...	...	...	...	...	2	...	...	...				
	with collars and keys — plain, front or rear	...	...	...	...	...	...	...	...	...	...	...	...	...	...	...	...	...	...	...	...	...	...	...				
	with nut and key — bevel wheel, front ...	...	...	...	...	...	...	...	...	...	...	...	...	...	...	...	...	...	...	...	...	...	...	...				
	with nut and key — bevel wheel, rear ...	...	...	...	...	...	...	...	...	...	...	...	...	...	...	...	...	...	...	...	...	...	...	...				
	with nut and key — front ...	...	...	...	...	...	...	...	...	...	...	...	...	...	...	...	...	...	...	...	...	...	...	...				
	with nut and key — rear ...	...	...	2	...	2	2	2	...	...	...	...	...	...	2	2	2	...	2	2	†4	...	†4	†4				
	with nuts — plain — front	...	...	...	...	...	...	...	2	...	...	...	...	...	...	...	...	...	...	...	...	...	...	...				
	with nuts — plain — rear ...	...	...	...	...	...	...	...	...	...	...	...	...	...	...	...	...	...	...	...	...	...	...	...				
	with nuts — bevel wheel — front	...	...	...	...	...	...	...	...	...	...	...	...	...	...	...	...	...	...	...	...	...	...	...				
	with nuts — bevel wheel — rear	...	...	2	...	2	...	...	...	...	...	...	...	...	2	2	...	...	...	...	...	...	...	...				
	with nuts — bevel wheel — rear	...	...	...	...	...	2	...	...	...	...	...	...	...	...	...	2	...	...	...	...	...	...	...				
	with nuts — bevel wheel — rear	...	...	...	...	...	...	2	...	...	...	...	...	...	...	...	...	...	...	...	...	...	...	...				
	with nuts — rear	...	...	...	...	...	...	...	2	...	...	...	...	...	...	...	...	2	2	...	...	...	...	...				
	front — left, with collar and nut ...	...	...	...	...	...	...	...	...	...	...	...	...	...	...	...	...	...	...	...	...	...	...	...				
	front — right, with nut ...	...	...	...	...	...	...	...	...	...	...	...	...	...	...	...	...	...	...	...	...	...	...	...				
	rear, with nuts — left ...	...	...	...	...	...	...	...	...	...	...	...	...	...	...	...	...	...	...	...	...	...	...	...				
	rear, with nuts — right ...	...	...	...	...	...	...	...	...	...	...	...	...	...	...	...	...	...	...	...	...	...	...	...				
	spur wheel, front	...	...	...	...	...	...	...	...	...	...	...	...	...	...	...	...	...	...	...	...	...	...	...				

Where articles are interchangeable with others on the same line

* Front also. † Rear also.

Digitized by Google

AND SPARE PARTS FOR.

Slides, L.

| 7 ft. parapet, C., R.M.L. | | | | | | | Dwarf, R.M.L. | | | | | | |

Slides, L, R.M.L.—Component

Component and spare parts.	Slides, L.																												
	Small port.		Casemate, R.M.L.																										
			To work within length.					12·5-in., 38 tons.			11 or 12-in., 25 tons.	10-in.				9-in.			Single plate.									
	12 $\frac{5}{10}$-in., 38 tons.			10-in.					6 ft. recoil.																				
	7 ft. recoil.	6 ft. recoil, Marks II. and III.	10	11 or 12-in., 25 tons.	Mark I.	Mark II.	Special.	9-in.	7 ft. recoil.	Marks II. and III.	Mark III., special.	Side.	Rear.	Side.	Rear.	Mark II.	Side	Rear.	7-in.	11 or 12-in., 25 tons, to work within length	9-in.	7-in.	R.M.L. 10·4-in., barbette.						
Bands, iron, securing, hydraulic, buffer { front	...	2	2	1	1	1	1	1	...	...	...	1	1	1	1	1	1	1	1	1	1	1	1						
rear	...	2	2	1	1	...	...	1	...	...	...	1	1	1	1	...	1	1	1	1	1	1	...						
Bearings, metal: flange, shaft, plain	...	...	...	...	...	1	...	...	...	...	...	...	...	...	...	1	...	...	...	...	...	...	...						
cross ... with cap	...	...	...	...	...	1	...	...	...	...	...	...	...	...	...	1	...	...	...	...	...	...	...						
screw, adjusting, lever clutch	...	...	...	...	...	...	...	...	...	...	1	...	...	...	...	...	...	...	...	...	...	...	...						
screw, compressor ...	...	...	...	...	...	...	...	...	1	1	1	...	...	...	...	...	...	...	...	...	...	...	...						
Bearings, metal, shaft: 1st motion ...	...	...	...	...	...	...	...	...	...	...	...	...	...	...	...	...	...	...	...	...	...	...	...						
2nd ,, ...	...	...	...	1	...	...	1	...	...	2	...	...	...	...	...	...	...	...	...	...	...	1						
3rd ,, ...	...	...	...	...	...	...	...	...	...	...	...	...	...	...	...	...	...	...	...	...	...	...	...						
winch { left ...	...	...	...	1	1	1	...	1	...	...	...	...	...	...	...	...	...	...	...	1	...	...	...						
handle { right ...	...	...	...	1	1	1	...	1	...	...	...	...	...	...	...	...	...	...	...	1	...	...	...						
cross	...	...	...	...	...	...	...	...	...	...	...	...	...	...	...	...	...	...	...	...	...	...	...						
Blocks:	2	2	...	...	...	...	...	...	2	2	2	...	...	...	...	...	...	...	...	...	...	...	...						
iron, with metal sheaves, snatch, 5-inch, for loading tackle, with shackles	...	...	2	...	...	2	2	...	...	...	...	2	2	2	2	...	...	...	...	...	...	...	...						
	...	...	...	...	...	...	...	...	...	...	...	...	...	...	...	2	...	...	...	...	...	...	...						
	...	...	...	...	...	...	...	...	...	...	...	...	...	...	...	...	...	...	...	2	...	...	...						
	..	...	...	...	...	...	...	...	...	...	...	...	...	...	...	...	...	...	...	...	...	...	...						
	...	...	...	...	...	...	...	...	...	...	...	...	...	...	...	...	...	...	...	...	...	...	...						
cast-iron	...	...	...	...	...	...	...	...	...	...	...	...	...	...	...	...	...	...	...	...	...	...	...						
packing, hydraulic, buffer { front	...	...	...	...	...	...	...	...	...	...	...	...	...	...	...	...	...	...	...	...	...	...	...						
packing, hydraulic, buffer { rear	...	...	...	...	...	...	...	...	...	...	...	...	...	...	...	...	...	...	...	...	...	...	...						
wood, packing, bracket, pointer	...	...	...	...	...	...	...	...	...	...	...	...	...	...	...	...	...	...	...	...	...	...	...						
wood, screw, supporting, girders	...	...	...	...	...	...	...	...	...	...	...	...	...	...	...	...	...	...	...	...	...	...	...						
Bollards, wood	...	...	...	...	...	...	...	...	...	...	...	...	...	...	...	...	...	...	1	...	1	1	...						
Bolts, wrought-iron, flange, with collars and nuts ... ... { front	...	...	...	...	...	...	...	...	...	...	...	...	...	...	...	...	...	...	...	...	...	...	...						
rear	...	...	...	...	...	...	...	...	...	...	...	...	...	...	...	...	...	...	...	...	...	...	...						
Box, grease, half round, 3 lb.	1	1	...	1	...	...	...	...	1	1	1	1	1	...	...	...	...	...	...	1	...	...	...						
Brackets, cast-iron with bolts or screws: — ...	...	...	...	...	...	...	...	...	...	...	...	...	...	...	...	...	...	...	...	...	...	...	...						
derrick, loading { left ...	...	...	...	...	...	...	...	...	...	...	...	...	...	...	...	...	...	...	...	...	...	...	...						
derrick, loading { right.	...	...	...	...	...	...	...	...	...	...	...	...	...	...	...	...	...	...	...	...	...	...	...						
guide, lever, clutch ...	...	...	...	...	...	...	...	...	...	...	...	...	...	...	...	...	...	...	...	...	...	...	...						
guide, roller	...	...	...	...	...	...	...	...	...	...	...	...	...	...	...	...	...	...	...	...	...	...	...						
lever, clutch	...	...	1	1	1	1	1	1	1	1	1	1	1	1	1	1	1	1	...	1	...	...	...						
running-back, with metal sheave, pin, and split key	...	...	...	...	...	1	1	...	...	...	...	...	...	...	...	1	...	...	...	...	...	...	...						
shaft: 2nd motion	...	...	...	2	...	1	...	...	...	...	...	...	...	...	...	...	...	...	...	...	...	...	...						
shaft: 3rd ,, ...	...	...	...	...	...	...	1	...	...	...	...	...	...	...	...	...	...	...	...	...	...	...	...						
shaft: bollard { front	...	...	...	...	...	...	1	1	...	...	...	...	...	...	...	1	...	...	...	...	...	...	...						
shaft: bollard { rear	...	...	1	1	1	1	1	1	...	...	...	1	1	1	1	1	1	1	...	1	...	...	...						

Where articles are interchangeable with others on the same line

Digitized by Google

and Spare parts for—*continued.*

7-ft. parapet, C, R.M.L.						Slides, L.																														Proportion of spare for each		
									Dwarf, R.M.L.																														
						12·5-in. converted, small port. Mark I.			12·5-in., 38 tons.			12·5-in., 35 tons.	11 or 12-in., 25 tons.		10-in.				9-in.				7-in.			Single plate.													
11 or 12-in., 25 tons.	10 in., Mark I.	10-in., B.O.C., Mark I.	10-in., Mark II.	9-in., Mark I.	9-in., Marks III. and IV.		C	D	Marks II. and III.		C		A	C	A	C	D	A	C	D																Detached group of Sub-Districts. —per 10 guns, or less No. of each nature.	Sub-District.—per 10 guns, or less No. of each nature.	Fort or Battery.—per 10 guns, or less No. of each nature.
1	1	1	2	1	2	2	...	...	...	...	1	1	1	1	1	1	1	1	1	1	1	1	1	1	1	1	1	1	1	1	1	1	1	1	1	...		
1	1	1	2	1	2	2	...	...	...	...	1	1	1	1	1	1	1	1	1	1	1	1	1	1	1	1	1	1	1	1	1	1	1	1	1	...		
...	...	...	...	...	...	...	...	...	...	...	...	...	...	...	...	...	...	...	...	...	...	...	...	...	...	...	...	...	...	...	...	...	...	...	...

Slides, L, R.M.L.—Component

| Component and spare parts. | Slides, L. | | |

and Spare parts for—*continued.*

7 ft. parapet, C., R.M.L.							Slides, L.																										Proportion of spare for each		
											Dwarf, R.M.L.																									
															10-in.				9-in.				7-in.												
11 or 12-in., 25 tons.	10-in., Mark I.	10-in., E.O.C., Mark I.	10-in., Mark II.	9-in., Mark I.	9-in., Marks III and IV.	12·5-in. converted, small port, Mark I.	12·5-in., 38 tons.		12-in., 35 tons.	11 or 12-in., 25 tons.																									
							C	D	C	A	C	A	C	D	A	C	D	A	C	D	Single plate.	7 in., 6½ tons, 6 ft. parapet.	Detached group of Sub-Districts—per 10 guns, or less No. of each nature.	Sub-District.—per 10 guns, or less No. of each nature.	Fort or Battery.—per 10 guns, or less No. of each nature.
						1			Marks II. and III.	Rear.	Central.	Side.	Side.	Rear.	Central.	Side.	Side.	Rear.	Central.	Side.	Side.	9-in.	7-in.											
						1		1	1																									
						1																												
						1																												
							1																											
							1	1	1																									
							1	1	1																									
																		1															
										1								1															
										1								1															
1	1	1	1	1	1						1	1	1	1	1	1	1		1	1													
1	1	1	1	1	1						1	1	1		1	1			1	1													
1	1	1	1	1	1						1	1	1		1	1			1	1													
1	1										1								1														
1	1																		1														
						1	1	1	1																									
						1	1	1	1																									
								1	1																									
						1																											
						1																											
												1																						
										1																								
												1	1			1	1			1	1													
												1	1			1	1			1	1													
1	1		1	1	1							1	1			1	1																

Slides, L, R.M.L.—Component

Component and spare parts.	Slides, L.																														
	Small port.			Casemate, R.M.L.																											
				To work within length.					12·5-in., 38 tons.																Single plate.						
	12·5-in., 38 tons.				10-in.					6 ft. recoil.			11 or 12-in., 25 tons.		10-in.				9-in.												
	7 ft. recoil.	6 ft. recoil, Marks II. and III.	10-in.	11 or 12-in., 25 tons.	Mark I.	Mark II.	Special.	9-in.	7 ft. recoil.	Marks II. and III.	Mark III., special.	Side.	Rear.	Side.	Rear.	Mark II.	Side.	Rear.	7-in.	11 or 12-in., 25 tons, to work within length	9-in.	7-in.	R.M.L. 10·4-in. barbette.						
Brackets, with bolts or screws — iron — sidearms — lever — clutch	...	...	...	...	...	...	...	...	...	...	...	...	...	...	...	...	...	...	...	...	...	...	...						
lever — with collar and key	1	1	...	...	...	...	...	...	...	...	...	...	...	...	...	...	...	...	...	...	...	...	...						
lever — hydraulic jack — front	1	1	...	...	...	...	...	...	1	1	1	...	...	...	...	...	...	...	...	...	...	...	...						
lever — hydraulic jack — rear	1	1	...	...	...	...	...	...	1	1	1	...	...	...	...	...	...	...	...	...	...	...	...						
running-back gear	...	...	...	1	...	...	1	...	...	...	...	...	...	1	1	...	1	1	...	...	...	...	...						
sidearms — front — double	...	...	1	1	1	1	1	...	...	...	...	1	1	1	1	...	1	1	1	1	1	1	...						
sidearms — front — single	...	...	...	...	...	...	...	...	...	...	...	...	...	...	...	1	...	...	...	...	...	...	...						
sidearms — rear — double	...	...	1	...	1	1	...	...	...	...	...	1	1	...	...	...	...	...	...	1	...	...	...						
sidearms — rear — single	...	...	...	...	...	...	1	...	...	...	...	...	...	...	...	...	...	...	...	...	...	...	...						
sidearms — rear — sinegle — rammer	...	...	1	...	1	...	...	...	...	...	...	...	...	1	1	1	1	1	1	...	...	1	1	...						
sidearms — rear — sinegle — sponge	...	...	1	...	1	...	...	...	...	...	...	...	...	1	1	1	1	1	1	...	...	1	1	...						
stop, compressor, lever	...	...	...	...	...	...	...	...	1	1	1	...	...	...	...	...	...	...	...	...	...	...	...						
supporting — bracket, pointer	1	1	1	1	1	1	1	1	1	1	1	1	1	1	1	1	1	1	1	1	...	...	1						
supporting — lever, rocking gear, preventor	...	...	...	...	...	...	...	...	...	...	...	...	...	...	...	...	...	...	...	...	...	...	...						
supporting — steps, inner	...	...	...	...	...	...	...	...	...	...	...	...	...	...	...	...	...	...	...	...	...	...	...						
supporting — sighting outer	...	...	...	...	...	...	...	...	...	...	...	...	...	...	...	...	...	...	...	...	...	...	...						
top, front, bollard, shaft	...	...	...	...	...	...	...	...	...	...	...	...	...	...	...	...	...	...	...	...	...	...	...						
tripper, with collar and split key	1	1	...	...	...	...	...	...	1	1	1	...	...	...	...	...	...	...	...	...	...	...	...						
metal — fork, tightening, chain ... left	1	1	...	...	...	...	...	...	1	1	1	...	...	...	...	...	...	...	...	...	...	...	...						
metal — fork, tightening, chain ... right	1	1	...	...	...	...	...	...	1	1	1	...	...	...	...	...	...	...	...	...	...	...	...						
indicator	1	1	...	...	...	...	...	...	1	1	1	...	...	...	...	...	...	...	...	...	...	...	...						
running in and out gear, shaft, 1st and 2nd motion	...	...	...	...	...	...	...	...	...	...	...	...	...	...	...	...	...	...	...	...	...	...	2						
running lever back — clutch	...	...	...	...	...	...	...	...	...	...	...	...	...	...	...	...	...	...	...	...	...	...	...						
running lever back — iron-pointed pairs	...	...	2	2	2	2	2	2	...	...	...	2	2	2	2	2	2	2	2	2	2	2	...						
running lever back — block with metal sheave, pin, and split key	...	...	1	1	1	...	...	1	...	...	...	1	1	1	1	...	1	1	...	1	...	...	...						
screw, adjusting, left	1	1	...	...	...	...	...	...	1	1	...	...	...	...	...	...	...	...	...	...	...	...	...						
lever, clutch right	1	1	...	...	...	...	...	...	1	1	1	...	...	...	...	...	...	...	...	...	...	...	...						
shaft — 2nd motion	...	...	...	1	...	...	1	2	2	...	...	...	...	...	...	...	...	...	...	2	...	...	...						
shaft — 3rd motion — front	...	...	1	...	...	...	...	...	...	...	...	...	...	...	...	...	...	...	...	1	...	...	...						
shaft — 3rd motion — rear	...	...	1	...	...	...	...	...	...	...	...	...	...	...	...	...	...	...	...	1	...	...	...						
shaft — 3rd motion — left	...	...	...	1	...	...	1	...	...	...	...	...	...	...	...	...	...	...	...	...	...	...	...						
shaft — 3rd motion — right	...	...	...	1	...	...	1	...	...	...	...	...	...	...	...	...	...	...	...	...	...	...	...						
shaft — bollard, front	...	...	1	1	1	...	...	1	...	...	...	1	1	1	1	...	1	1	...	1	...	...	...						

Where articles are interchangeable with others on the same line

* 2 brackets will be required for mountings in emplacements more than 75 feet above sea level.

Digitized by Google

and Spare parts for—*continued.*

| Slides, L. | | |

Slides, L, R.M.L.—Component

Component and spare parts.	Slides, L.																																
	Small port.			Casemate, R.M.L.																													
				To work within length.						12·5 in., 38 tons.			11 or 12-in., 25 tons.			10-in.			9-in.			Single plate.										
	12·5-in., 38 tons.			10-in.						6 ft recoil.																							
	7 ft. recoil.	6 ft. recoil, Marks II. and III.	10-in.	11 or 12-in., 25 tons.	Mark I.	Mark II.	Special.	9-in.	7 ft. recoil.	Marks II. and III.	Mark III., special.	Side.	Rear.	Side.	Rear.	Mark II.	Side.	Rear.	7-in.	11 or 12-in., 25 tons, to work within length.	9-in.	7-in.	R.M.L. 10·4-in., barbette.
Brackets, with bolts or screws — metal — steel — shaft — supporting — battery	...	...	...	...	...	...	...	...	...	...	...	...	...	...	...	...	...	...	...	...	...	...	1
Brackets, with bolts or screws — metal — steel — shaft — supporting — firing key	...	...	...	...	...	...	...	...	...	...	...	...	...	...	...	...	...	...	...	...	...	...	1
Brackets, with bolts or screws — metal — steel — shaft — brake	...	...	...	...	...	...	...	...	...	...	...	...	...	...	...	...	...	...	...	...	...	...	...
Brackets, with bolts or screws — metal — steel — shaft — longitudinal, rear	...	...	...	...	...	...	...	1	...	...	...	...	...	...	...	...	...	...	...	...	...	...	...
Brackets, with bolts or screws — metal — steel — shaft — traversing — front	1	1	...	...	...	...	...	...	1	1	1	...	...	...	...	...	...	...	...	...	...	...	...
Brackets, with bolts or screws — metal — steel — shaft — traversing — 1st, 2nd, and 3rd motion	...	...	...	...	...	...	...	...	...	...	...	...	...	...	...	...	...	...	...	...	...	...	1
Brackets, with bolts or screws — metal — steel — shaft — winch handle	...	...	...	...	...	...	...	...	...	...	...	...	1	...	1	...	...	1	...	...	...	...	...
Brackets, with bolts or screws — metal — steel — spindle, pinion, rear	...	...	...	1	...	...	...	...	2	2	2	...	...	...	...	...	...	...	...	...	...	...	...
Brackets, with bolts or screws — metal — steel — thrust	...	...	...	...	...	...	...	...	2	2	2	...	...	...	...	...	...	...	...	...	...	...	...
Brackets, with bolts or screws — metal — steel — winch handles, pairs	2	2	...	...	...	...	...	...	2	2	2	...	...	...	...	...	...	...	...	...	...	...	...
Brackets, with bolts or screws — M.C. steel — derrick, loading — left	...	...	...	...	...	...	...	...	...	...	...	...	...	...	...	...	...	...	...	...	...	...	...
Brackets, with bolts or screws — M.C. steel — derrick, loading — right	...	...	...	...	...	...	...	...	...	...	...	...	...	...	...	...	...	...	...	...	...	...	...
Brackets, with bolts or screws — M.C. steel — screws, supporting girder — bottom	...	...	...	...	...	...	...	...	...	...	...	...	...	...	...	...	...	...	...	...	...	...	...
Brackets, with bolts or screws — M.C. steel — screws, supporting girder — left	...	...	...	...	...	...	...	...	...	...	...	...	...	...	...	...	...	...	...	...	...	...	...
Brackets, with bolts or screws — M.C. steel — screws, supporting girder — right	...	...	...	...	...	...	...	...	...	...	...	...	...	...	...	...	...	...	...	...	...	...	...
Brackets, with bolts or screws — M.C. steel — traversing, rear — left	...	...	...	...	...	...	...	...	...	...	...	...	...	...	...	...	...	...	...	...	...	...	...
Brackets, with bolts or screws — M.C. steel — traversing, rear — right	...	...	...	...	...	...	...	...	...	...	...	...	...	...	...	...	...	...	...	...	...	...	...
Brackets, with bolts or screws — M.C. steel — axles, truck, front — left	...	...	...	...	...	...	...	...	...	...	...	...	...	...	...	...	...	...	...	...	...	...	...
Brackets, with bolts or screws — M.C. steel — axles, truck, front — right	...	...	...	...	...	...	...	...	...	...	...	...	...	...	...	...	...	...	...	...	...	...	...
Brackets, with bolts or screws — M.C. steel — axles, truck, front — supporting springs	...	...	...	...	...	...	...	...	...	...	...	...	...	...	...	...	...	...	...	...	...	...	...
Brackets, with bolts or screws — steel — step sighting	...	...	...	...	...	...	...	...	...	...	...	...	...	...	...	...	...	...	...	...	...	...	1
Brackets, with bolts or screws — steel — supporting bracket, shaft, traversing, front	...	...	...	...	...	...	...	...	...	...	...	...	...	...	...	...	...	...	...	...	...	...	...
Brackets, with bolts or screws — steel — rod, piston	...	...	...	...	...	...	...	...	...	...	...	...	...	...	...	...	...	...	...	...	...	...	1
Buffers front including. hydraulic	...	2	...	...	...	...	...	...	...	...	...	...	...	...	...	...	...	...	...	...	...	...	...
Buffers front including. hydraulic	...	...	...	...	1	1	...	...	...	...	...	...	...	...	...	...	...	...	...	...	...	...	...
Buffers front including. hydraulic	...	...	...	...	...	...	...	...	...	...	...	1	1	...	...	...	...	...	...	...	...	...	...
Buffers front including. hydraulic	...	...	...	1	...	1	...	...	...	...	...	...	...	1	1	...	...	...	...	1	...	...	...
Buffers front including. hydraulic	...	...	2	...	...	...	...	...	...	...	...	...	...	...	...	...	...	...	...	...	...	...	...
Buffers front including. hydraulic	...	...	...	...	...	...	...	1	...	...	...	...	...	...	...	...	1	1	...	...	1	...	...
Buffers front including. hydraulic	...	...	...	...	...	...	...	...	...	...	...	...	...	...	...	1	...	...	...	...	...	1	...
Buffers front including. hydraulic, with taper bars	...	...	...	...	...	...	...	...	...	...	...	...	...	...	...	...	...	...	...	...	...	...	...
Buffers front including. stop, with disc springs, spindles, and keys — left	...	...	...	...	...	...	...	...	...	...	...	...	...	...	...	...	...	...	...	...	...	...	...
Buffers front including. stop, with disc springs, spindles, and keys — right	...	...	...	...	...	...	...	...	...	...	...	...	...	...	...	...	...	...	...	...	...	...	...
Buffers front including. wood, block, with disc springs, spindles, and keys — iron rings	1	1	...	...	...	...	...	...	...	...	...	...	...	...	...	...	...	...	...	...	...	...	...
Buffers front including. wood, block, with disc springs, spindles, and keys — angle bar	...	...	1	1	1	...	...	1	1	1	1	1	1	1	1	...	1	1	1	1	1	1	...
Buffers front including. disc springs, spindles, and keys	...	...	...	...	...	1	1	...	...	...	...	...	...	...	...	1	...	...	...	...	...	...	...

Where articles are interchangeable with others on the same line

Digitized by Google

and Spare parts for—*continued.*

| Slides, L. | | |

Slides, L, R.M.L.—Component

Component and spare parts.	Slides, L.																														
	Small port.			Casemate, R.M.L.																											
				To work within length.					12·5-in., 38 tons.				11 or 12-in., 25 tons.		10-in.				9-in.			Single plate.								
	12·5-in., 38 tons.				10-in.					6 ft. recoil.																					
	7 ft. recoil.	6 ft. recoil, Marks II. and III.	10-in.	11 or 12-in., 25 tons.	Mark I.	Mark II.	Special.	9-in.	7 ft. recoil.	Marks II. and III.	Mark III., special.	Side.	Rear.	Side.	Rear.	Mark II.	Side.	Rear.	7-in.	11 or 12-in., 24 tons, to work within length.	9-in.	7-in.	R.M.L. 10·4-inch, barbette.								
Buffers, rear, including bracket, with cast-iron packing collars, disc springs, spindles, and keys	...	...	...	...	...	...	...	...	...	...	...	...	...	...	...	...	...	...	...	.....	...	...	...								
stop, with disc springs, spindle, and key — right	...	...	1	1	1	...	...	1	1	1	1	1	1	1	1	...	1	1	1	1	1	1	...								
stop, with disc springs, spindle, and key — left	...	...	1	1	1	...	...	1	1	1	1	1	1	1	1	...	1	1	1	1	1	1	...								
disc springs, spindles, and keys	...	...	...	...	...	1	1	...	...	...	...	...	...	...	...	1	...	...	...	...	...	...	...								
wood block, with bolts, and disc springs	1	1	...	...	...	...	...	...	...	...	...	...	...	...	...	...	...	...	...	...	...	...	...								
stop, with springs, spindles, nuts, and keys	...	...	...	...	...	...	...	...	...	...	...	...	...	...	...	...	...	...	...	...	...	...	...								
Capstan head, iron screw supporting, girders	...	...	...	...	...	...	...	...	...	...	...	...	...	...	...	...	...	...	...	...	...	...	...								
Catches, metal, pointer	...	...	...	...	...	1	...	...	...	...	...	...	...	...	...	1	...	...	...	...	...	...	...								
Clips, iron, securing, hydraulic buffer, with bolts	...	...	...	...	...	...	...	...	...	...	...	...	...	...	...	...	...	...	...	...	...	...	...								
Derricks, iron, loading ...	...	...	...	...	...	...	...	...	...	...	...	...	...	...	...	...	...	...	...	...	...	...	...								
Derricks, iron, loading with bearer	...	...	...	...	...	...	...	...	...	...	...	...	...	...	...	...	...	...	...	...	...	...	...								
Flanges, trucks — steel — front	...	...	...	...	...	...	...	...	...	...	...	...	...	...	...	...	...	...	...	...	...	...	...								
Flanges, trucks — steel — rear	...	...	...	...	...	...	...	...	...	...	...	...	...	...	...	...	...	...	...	...	...	...	...								
Flanges, trucks — iron, prs. — front — left	1	1	1	1	1	1	1	1	1	1	1	1	1	1	1	1	1	1	1	1	1	1	...								
Flanges, trucks — iron, prs. — front — right	1	1	1	1	1	1	1	1	1	1	1	1	1	1	1	1	1	1	1	1	1	1	...								
Flanges, trucks — iron, prs. — rear — left	1	1	1	1	1	1	1	1	1	1	1	1	1	1	1	1	1	1	1	1	1	1	...								
Flanges, trucks — iron, prs. — rear — right	1	1	1	1	1	1	1	1	1	1	1	1	1	1	1	1	1	1	1	1	1	1	...								
Flanges, trucks — iron, rear — left	...	...	...	...	...	...	...	...	...	...	...	...	...	...	...	...	...	...	...	...	...	...	...								
Flanges, trucks — iron, rear — right	...	...	...	...	...	...	...	...	...	...	...	...	...	...	...	...	...	...	...	...	...	...	...								
Ladders, iron, with bolts — rear	...	...	...	...	...	...	...	...	...	...	...	...	...	...	...	...	...	...	...	...	...	...	...								
Ladders, iron, with bolts — step, sighting	...	...	...	...	...	...	...	...	...	...	...	...	...	...	...	...	...	...	...	...	...	...	1								
Ladders, side ...	..	...	...	...	...	...	...	...	...	...	...	...	...	...	...	...	...	...	...	...	...	...	1								
Levers, iron, adjusting, hydraulic buffers, with key and taper pin	...	...	...	...	...	...	...	...	...	...	...	...	...	...	...	...	...	...	...	...	...	...	...								
Links, iron, connecting blocks, wood, supporting, girders	...	...	...	...	...	...	...	...	...	...	...	...	...	...	...	...	...	...	...	...	...	...	...								
Loops, iron — with nuts — front	2	2	2	2	2	2	2	2	2	2	2	2	2	2	2	2	2	2	2	2	2	2	...								
Loops, iron — with nuts — rear	2	2	2	2	2	2	2	2	2	2	2	2	2	2	2	2	2	2	2	2	2	2	2								
Loops, iron — strap, ...	...	...	...	...	...	...	...	...	...	...	...	...	...	...	...	...	...	...	...	...	...	...	...								
Loops, iron — bracket, step — with bolts — front	...	...	...	...	...	...	...	...	...	...	...	...	...	...	...	...	...	...	...	...	...	...	...								
Loops, iron — bracket, step — with bolts — rear	...	...	...	...	...	...	...	...	...	...	...	...	...	...	...	...	...	...	...	...	...	...	...								

Where articles are interchangeable with others on the same line

Digitized by Google

and Spare parts for—*continued.*

| 7-ft. parapet, C., R.M.L. | | | | | | | Slides, L. | | | | | | |

Slides, L, R.M.L.—Component

Component and spare parts.	Slides, L.																														
	Small port.			Casemate, R.M.L.																											
				To work within length.						12·5-in., 38 tons.			11 or 12-in., 25 tons.		10-in.			9-in.			Single plate.									
	12·5-in., 38 tons.			10-in.				6 ft. recoil.																							
	7 ft. recoil.	6 ft. recoil, Marks II. and III.	10-in.	11 or 12-in., 25 tons.	Mark I.	Mark II.	Special.	9-in.	7 ft. recoil.	Marks II. and III.	Mark III., special.	Side.	Rear.	Side.	Rear.	Mark II.	Side.	Rear.	7-in.	11 or 12-in., 25 tons, to work within length.	9-in.	7-in.	R.M.L. 10·4-in., barbette								
Pans, drip, hydraulic buffer	No. 1 ...	...	2	...	...	...	...	...	...	...	...	...	...	...	...	...	...	...	...	...	...	...	...								
	,, 2 ...	...	2	...	...	...	...	...	...	...	...	...	...	...	...	...	...	...	...	...	...	...	...								
	,, 11 ...	...	...	2	1	1	1	1	1	...	...	...	1	1	1	1	1	1	1	1	1	1	1								
Pins, steel,	bracket, axle, truck, front, with collar and taper pin	...	...	...	...	...	...	...	...	...	...	...	...	...	...	...	...	...	...	...	...	...	...								
	securing, screw, supporting, with split keys	...	...	...	...	...	...	...	...	...	...	...	...	...	...	...	...	...	...	...	...	...	...								
Plates, iron	block, supporting, screw	left ...	...	...	...	...	...	...	...	...	...	...	...	...	...	...	...	...	...	...	...	...	...								
		right ...	...	...	...	...	...	...	...	...	...	...	...	...	...	...	...	...	...	...	...	...	...								
	packing, bracket, sheave block	...	...	...	...	...	...	...	...	...	...	...	...	...	...	...	...	...	...	...	...	...	...								
	staple, sponge tank	front ...	...	...	...	...	...	...	...	...	...	...	...	...	...	...	...	...	...	...	...	...	...								
		rear ...	...	...	...	...	...	...	...	...	...	...	...	...	...	...	...	...	...	...	...	...	...								
	stud, link, connecting blocks, with collar and split key	...	...	...	...	...	...	...	...	...	...	...	...	...	...	...	...	...	...	...	...	...	...								
	supporting, bracket, pointer, with wood block and screws	...	...	...	...	...	...	...	...	...	...	...	...	...	...	...	...	...	...	...	...	...	...								
	supporting, pivot plates	with bolts and nuts	...	...	...	...	...	...	...	...	...	...	...	...	...	...	...	...	...	...	...	...	...								
		(angle) with bolts and nuts	...	...	...	...	...	...	...	...	...	...	...	...	...	...	...	...	...	...	...	...	...								
	metal, with screws	arrow ...	...	...	...	...	...	...	...	...	...	...	...	...	...	...	...	...	...	...	...	...	...								
		inscription...	...	...	...	...	...	...	...	...	...	...	...	...	...	...	...	...	...	...	...	...	...								
	steel, guide, bracket supporting, springs	left ...	...	...	...	...	...	...	...	...	...	...	...	...	...	...	...	...	...	...	...	...	...								
		right ...	...	...	...	...	...	...	...	...	...	...	...	...	...	...	...	...	...	...	...	...	...								
	spindles, spring, firing	...	...	...	...	...	...	...	...	...	...	...	...	...	...	...	...	...	...	...	...	...	...								
	bearing, racer, box, transom, front	...	...	...	...	...	...	...	...	...	...	...	...	...	...	...	...	...	...	...	...	...	...								
Platforms, wood, rear, moveable		...	...	1	1	1	1	1	1	...	...	...	1	1	1	1	1	1	1	1	1	1	1								
Planks	wood, centre, complete ... set		1	1	...	1	1	...	...	1	1	1	1	1	1	1	1	...	1	1	1	1	1	1	...						
	wood, centre	left ...	...	...	...	...	...	...	...	...	...	...	...	...	...	...	...	...	...	...	...	...	...								
		right ...	...	...	...	...	...	...	...	...	...	...	...	...	...	...	...	...	...	...	...	...	...								
38407 Equip. 1580 **Plugs**, filling, hole, hydraulic buffer	No. 20 ...	...	...	2	1	1	...	...	1	...	...	...	1	1	1	1	...	1	1	1	1	1	1								
	,, 21 ...	...	2	...	...	...	...	...	...	...	...	...	...	...	...	...	...	...	...	...	...	...	...								
	,, 46 ...	...	...	...	...	...	1	1	...	...	...	...	...	...	...	1	...	...	...	...	...	...	...								
Pointers, steel, arc, traversing		1	1	1	...	...	...	...	...	...	...	...	...	...	...	...	...	...	...	...	...	...	...								

Where articles are interchangeable with others on the same line

* 2 for 10-in., small port.

Digitized by Google

and Spare parts for—*continued*

Slides, L.																																		Proportion of spare for each		
7 ft. parapet, C, R.M.L.								Dwarf, R.M.L.																													
11" or 12-in., 25 tons.	10-in., Mark I.	10-in., E.O.C., Mark I.	10-in., Mark II.	9-in., Mark I.	9-in., Marks III. and IV.	12·5-in. converted, small port, Mark I.	12·5-in., 38 tons.		12-in., 35 tons.	11 or 12-in., 25 tons.		10-in.			9-in.			7-in.			Single plate.	7-in., 6½ tons, 6 ft. parapet.	Detached group of Sub-Districts. —per 10 guns, or less No. of each nature.	Sub-District.—per 10 guns, or less No. of each nature.	Fort or Battery.—per 10 guns, or less No. of each nature.
							C	D	C	A	C	A	C	D	A	C	D	A	C	D																	
							Marks II. and III.																															

Slides, L, R.M.L.—Component

Component and spare parts.	Slides, L.																																
	Small port.			Casemate, R.M.L.																													
				To work within length.							12·5-in., 38 tons.			11 or 12-in., 25 tons.			10-in.				9-in.				Single plate.							
	12·5-in., 38 tons.				10-in.						6 ft. recoil.																						
	7 ft. recoil.	6 ft. recoil, Marks II. and III.	10-in.	11 or 12-in., 25 tons.	Mark I.	Mark II.	Special.	9-in.	7 ft. recoil.	Marks II. and III.	Mark III., special.	Side	Rear.	Side.	Rear.	Mark II.	Side.	Rear.	7-in.	11 or 12-in., 25 tons, to work within length.	9-in.	7-in.	R.M.L. 10·4-in., barbette.										
Pointers, steel, arc, traversing, with metal bracket and bolts { No. 1	...	...	...	...	1	1	...	1†	1†	1	...	...	...	1	...	...	1	...	...	1	...	1	...	...									
{ No. 5	...	...	...	1	1	...	...	1	...	...	...	1	1	1	...	...	1	1	1	1	...	...	...									
Posts, hand	...	...	...	1	2	2	1	1	2	1	1	1	2	2	2	1	2	2	2	2	2	2	...									
Rails, iron, hand, steps, sighting, with stanchions { long { left ...	...	...	...	...	...	...	...	...	...	...	...	...	...	...	...	...	...	...	...	...	...	...	...									
{ long { right...	...	...	...	...	...	...	...	...	...	...	...	...	...	...	...	...	...	...	...	...	...	...	...									
{ short ...	...	...	...	...	...	...	...	...	...	...	...	...	...	...	...	...	...	...	...	...	...	...	...									
Screws, steel, support-ing girders { left ...	...	...	...	...	...	...	...	...	...	...	...	...	...	...	...	...	...	...	...	...	...	...	...									
{ right	...	...	...	...	...	...	...	...	...	...	...	...	...	...	...	...	...	...	...	...	...	...	...									
Shackles, iron, block, snatch, with nut, pin, and split key	...	...	...	...	...	...	...	...	...	...	...	...	...	...	...	...	...	...	...	...	...	...	...									
Slide, L, body, without fittings	1	1	1	1	1	1	1	1	1	1	1	1	1	1	1	1	1	1	1	1	1	1	1									
Sockets, lever, No. 8	...	...	...	...	...	...	...	...	...	...	...	...	...	...	...	...	...	...	...	...	...	...	1									
Spindles: iron, buffer, with keys: front ...	...	...	...	...	...	...	...	...	6	6	6	...	...	...	...	...	...	...	...	...	...	...	...									
	4	4	...	...	...	...	...	...	...	...	...	...	...	...	...	...	...	...	...	...	...	...	...									
	...	...	5	5	5	...	...	...	...	...	...	5	5	5	5	...	...	...	...	5	...	...	...									
	...	...	...	...	...	5	5	...	...	...	...	...	...	...	...	5	...	...	...	...	...	...	...									
	...	...	...	...	...	...	...	4	...	...	...	...	...	...	...	...	4	4	4	...	4	4	...									
Spindles: iron, buffer, with keys: front or rear ...	...	...	...	...	...	...	...	...	...	...	...	...	...	...	...	...	...	...	...	...	...	...	...									
	...	...	...	...	...	...	...	...	2	2	2	...	...	...	...	...	...	...	...	...	...	...	...									
Spindles: iron, buffer, with keys: rear ...	...	...	2	2	2	...	...	...	...	...	...	2	2	2	2	...	...	...	...	2	...	...	...									
	...	...	...	...	...	2	2	...	...	...	...	...	...	...	...	2	...	...	...	...	...	...	...									
	...	...	...	...	...	...	...	2	...	...	...	...	...	...	...	...	2	2	2	...	2	2	...									
Spindles: steel, spring, firing, with collar and nuts	...	...	...	...	...	...	...	...	...	...	...	...	...	...	...	...	...	...	...	...	...	...	...									
Spindles, bollard, with bolt, collar, and nut	...	...	...	...	...	...	...	...	...	...	...	...	...	...	...	...	...	...	...	...	...	...	...									
Springs, disc: No. 2 { with radius	3	3	...	...	...	...	...	...	...	...	...	...	...	...	...	...	...	...	...	...	...	...	2									
{ without ,,	45	45	...	...	...	...	...	...	...	...	...	...	...	...	...	...	...	...	...	...	...	...	22									
,, 3	52	52	56	56	56	56	56	...	64	64	64	56	56	56	56	56	...	...	...	56	...	...	...									
,, 6	...	...	...	...	...	...	...	42	...	...	...	...	...	...	...	...	42	42	42	...	42	42	...									
,, 24 ... pairs	...	...	...	...	...	...	...	...	...	...	...	...	...	...	...	...	...	...	...	...	...	...	...									
Stages, loading	...	...	...	...	...	...	...	...	...	...	...	...	...	...	...	...	...	...	...	...	...	...	...									
Staples, iron, tank, sponge ...	...	...	...	...	...	...	...	...	...	...	...	...	...	...	...	...	...	...	...	...	...	...	...									

Where articles are interchangeable with others on the same line

If for use on turntables, 1 left and 1 right of each.

Digitized by Google

and Spare parts for—*continued.*

7-ft. parapet, C, R.M.L.							Slides, L.																										Proportion of spare for each		
									Dwarf, R.M.L.																												
								12·5-in., 38 tons.		12-in., 35 tons.		11 or 12-in., 25 tons.		10 in.			9-in.			7-in.			Single plate.													
11 or 12-in., 25 tons.	10-in., Mark I.	10-in., E.O.C., Mark I.	10-in., Mark II.	9-in., Mark I.	9-in., Marks III. and IV.	12·5-in. converted, small port, Mark I.		Marks II. and III.				A	C	A	C	D	A	C	D														Detached group of Sub-Districts. —per 10 guns, or less No. of each nature.	Sub-District.—per 10 guns, or less No. of each nature.	Fort or Battery.—per 10 guns, or less No. of each nature.
							C	D	C	Rear.	Central.	Side.	Side.	Rear.	Central.	Side.	Side.	Rear.	Central.	Side.	Side.	Rear.	Central.	Side.	Side.	A	C	D	9-in.	7-in.	7-in., 6½ tons, 6 ft. parapet.			
1	1	...	...	1	1	1	1	1	1	1	...	1	1	1	1	1	1	1	1	1	1	1	1	1	...	1	...	...							
...	...	1	...	...	...	...	...	...	...	...	1	...	...	...	...	...	...	...	...	...	...	...	...	...	...	...	...	...							
2	1	2	...	1	1	...	...	...	...	...	...	...	...	...	...	...	...	...	...	...	...	...	...	...	...	...	...	...							
...	...	...	...	...	...	...	1	...	...	...	...	...	...	...	...	...	...	...	...	...	...	...	...	...	...	...	...	...							
...	...	...	...	...	...	...	1	...	...	...	...	...	...	...	...	...	...	...	...	...	...	...	...	...	...	...	...	...							
...	...	...	1	...	...	1	2	...	...	...	...	...	...	...	...	...	...	...	...	...	...	...	...	...	...	...	...	...							
...	...	...	1	...	...	1	...	...	...	...	...	...	...	...	...	...	...	...	...	...	...	...	...	...	...	...	...	...							
...	...	...	2	...	...	...	...	...	...	...	...	...	...	...	...	...	...	...	...	...	...	...	...	...	...	...	...	...							
1	1	1	1	1	1	1	1	1	1	1	1	1	1	1	1	1	1	1	1	1	1	1	1	1	1	1	1	1							
...	...	...	...	...	...	...	...	1	1	1	2	2	2	1	2	1	1	1	1	1	1	2	2	2	1	2	...								
...	...	...	...	...	...	...	...	6	6	6	...	...	...	...	...	...	...	...	...	...	...	...	...	...	...	...	...	...							
5	5	...	...	...	...	...	...	...	...	...	5	5	5	5	5	5	5	5	...	...	...	...	...	...	...	...	...	...							
...	...	...	...	4	...	...	...	...	...	...	...	...	...	...	...	...	...	4	4	4	4	4	4	4	4	4	...	...							
...	...	...	4	...	4	...	...	...	...	...	...	...	...	...	...	...	...	...	...	...	...	...	...	...	...	...	...	...							
...	...	...	...	...	...	4	...	...	...	...	...	...	...	...	...	...	...	...	...	...	...	...	...	...	...	...	...	...							
...	...	...	...	...	...	...	...	2	2	2	...	...	...	...	...	...	...	...	...	...	...	...	...	...	...	...	4	...							
2	2	...	...	...	...	...	...	...	...	...	2	2	2	2	2	2	2	2	...	...	...	...	...	...	...	...	...	...							
...	...	...	...	...	2	...	...	...	...	...	...	...	...	...	...	...	...	2	2	2	2	2	2	2	2	...	...	...							
...	...	...	...	2	...	2	...	...	...	...	...	...	...	...	...	...	...	...	...	...	...	...	...	...	...	...	...	...							
...	...	...	2	...	...	...	3	...	...	...	...	...	...	...	...	...	...	...	...	...	...	...	...	...	...	...	...	...							
1	1	...	...	1	...	...	...	...	...	...	...	...	...	...	...	...	...	...	...	...	...	...	...	...	...	...	...	...							
...	...	...	...	...	...	...	3	...	...	...	...	...	...	...	...	...	...	...	...	...	...	...	...	...	...	...	...	...							
...	...	...	...	...	...	...	45	...	...	...	...	...	...	...	...	...	...	...	...	...	...	...	...	...	...	...	...	...							
56	56	...	48	...	...	...	52	64	64	64	56	56	56	56	56	56	56	56	...	...	...	...	...	...	...	...	...	...							
...	...	...	...	42	42	...	...	...	...	...	...	...	...	...	...	...	...	42	42	42	42	42	42	42	42	28	...	...							
...	...	...	24	...	...	...	...	...	...	...	...	...	...	...	...	...	...	...	...	...	...	...	...	...	...	...	...	...							
...	...	...	...	...	1	...	...	...	...	...	...	...	...	...	...	...	...	...	...	...	...	...	...	...	...	...	...	...							
...	...	...	2	...	...	...	...	...	...	...	...	...	...	...	...	...	...	...	...	...	...	...	...	...	...	...	...	...							

for which a supply of spare is laid down, they are shown in *italics.*

Digitized by Google

Slides, L, R.M.L.—Component

Component and spare parts.	Slides, L.																								
	Small port.			Casemate, R.M.L.																					
				To work within length.				12·5-in., 38 tons.													Single plate.				
	12·5-in., 38 tons.				10-in.				6-ft. recoil.		11 or 12-in., 25 tons.	10-in.			9-in.										
	7 ft. recoil.	6 ft. recoil, Marks II. and III.	10-in.	11 or 12-in., 25 tons.	Mark I.	Mark II.	Special.	9-in.	7 ft. recoil.	Marks II. and III.	Mark III., special.	Side.	Rear.	Side.	Rear.	Mark II.	Side.	Rear.	7-in.	11 or 12-in., 25 tons, to work within length.	9-in.	7-in.	R.M.L. 10·4-in., barbette.		
Stays, iron																									
bracket, traversing, rear, with screws	...	...	...	...	...	...	...	...	...	...	...	...	...	...	...	...	...	...	...	...	...	...	...	...	...
with bolts: supporting steps	...	...	...	...	...	...	...	...	...	...	...	...	...	...	...	...	...	...	...	...	...	...	...	...	...
with bolts: sighting	...	...	...	...	...	...	...	...	...	...	...	...	...	...	...	...	...	...	...	...	...	...	...	...	...
with bolts: ladder rear ...	...	...	...	...	...	...	...	...	...	...	...	...	...	...	...	...	...	...	...	...	...	...	...	...	...
with bolts: ladder step sighting	...	...	...	...	...	...	...	...	...	...	...	...	...	...	...	...	...	...	...	...	...	...	...	...	1
Steps, complete iron																									
rear	...	...	...	...	...	...	...	...	...	...	...	...	...	...	...	...	...	...	...	...	...	...	...	...	...
side: left	...	...	...	...	...	...	...	...	...	...	...	...	...	...	...	...	...	...	...	...	...	...	...	...	...
side: right	...	...	...	...	...	...	...	...	...	...	...	...	...	...	...	...	...	...	...	...	...	...	...	...	...
side: stirrup	...	...	...	...	...	...	...	...	...	...	...	...	...	...	...	...	...	...	...	...	...	...	...	...	...
wood ...	1	1	...	...	...	...	...	...	1	1	1	...	...	...	...	...	...	...	...	...	...	...	...	...	...
rear: left	...	...	...	...	...	...	...	...	...	...	...	...	...	...	...	...	...	...	...	...	...	...	...	...	...
rear: right	...	...	...	...	...	...	...	...	...	...	...	...	...	...	...	...	...	...	...	...	...	...	...	...	...
side: left	...	...	...	...	...	...	1	...	...	...	...	...	...	...	...	...	...	...	...	...	...	...	...	...	...
side: right	...	...	...	...	...	...	1	...	...	...	...	...	...	...	...	...	...	...	...	...	...	...	...	...	...
side: additional	...	...	...	...	...	...	...	...	...	...	...	...	...	...	...	...	...	...	...	...	...	...	...	...	...
sighting ...	...	...	1	2	2	1	1	2	3	3	3	2	2	2	1	1	2	2	1	2	2	1	1		
sighting: upper	...	...	...	...	...	...	...	...	...	...	...	...	...	...	...	...	...	...	...	...	...	...	...		
sighting: lower	...	...	...	...	...	...	...	...	...	...	...	...	...	...	...	...	...	...	...	...	...	...	...		
Stops, iron, sponge tank	...	...	...	...	...	...	...	...	...	...	...	...	...	...	...	...	...	...	...	1	...	...	...		
Straps, leather, 26 in. × 1 in.	1	1	...	1	...	...	...	...	1	1	1	1	1	...	...	...	...	...	...	1	...	...	...		
Tanks, iron, sponge	...	...	1	1	1	1	1	1	...	...	...	1	1	1	1	1	1	1	1	1	1	1	...		
Trucks steel plain front left ...	...	...	...	...	...	...	...	...	...	...	...	...	...	...	...	...	...	...	...	...	...	...	...		
steel plain front right ...	...	...	...	...	...	...	...	...	...	...	...	...	...	...	...	...	...	...	...	...	...	...	...		
steel plain rear front ...	2	2	2	2	2	2	2	...	2	2	2	2	2	2	2	2	...	...	...	2	...	...	...		
steel plain rear rear ...	2	2	...	...	...	...	...	...	2	2	2	...	...	...	...	...	...	...	...	...	...	...	...		
steel with bevel wheel front ...	...	...	2	2	2	2	2	...	...	...	...	2	2	2	2	2	...	...	...	2	...	...	...		
steel with bevel wheel rear ...	...	...	...	...	...	...	...	...	...	...	...	...	...	...	...	...	...	...	...	...	...	...	...		
steel with spur wheel, front ...	...	...	...	...	...	...	...	...	...	...	...	...	...	...	...	...	...	...	...	...	...	...	...		
iron plain front ...	...	...	...	...	...	...	...	2	...	...	...	...	...	...	...	...	2	2	2	...	2	2	...		
iron plain rear ...	...	...	...	...	...	...	...	...	...	...	...	...	...	...	...	...	2	2	2	...	2	2	...		
iron with bevel wheel front ...	...	...	...	...	...	...	...	...	...	...	...	...	...	...	...	...	...	...	...	...	...	...	...		
iron with bevel wheel rear ...	...	...	...	...	...	...	...	2	...	...	...	...	...	...	...	...	2	2	2	...	...	...	...		
Wheels, steel, bevel, axle front	...	...	...	...	...	...	...	...	...	...	...	...	...	...	...	...	...	...	...	...	...	...	...		
APPARATUS, WASHING-OUT.																									
Blocks, chain tackle (Weston) ... ... pair	...	...	...	...	...	...	...	...	...	...	...	...	...	...	...	...	...	...	...	...	...	...	1		
Brackets, metal, guide rods with bolts	...	...	...	...	...	...	...	...	...	...	...	...	...	...	...	...	...	...	...	...	...	...	1		
Connections, metal, cylinder	...	...	...	...	...	...	...	...	...	...	...	...	...	...	...	...	...	...	...	...	...	...	1		
Cylinders, with ram ...	...	...	...	...	...	...	...	...	...	...	...	...	...	...	...	...	...	...	...	...	...	...	1		
Glands, metal, inner...	...	...	...	...	...	...	...	...	...	...	...	...	...	...	...	...	...	...	...	...	...	...	1		
cylinder outer...	...	...	...	...	...	...	...	...	...	...	...	...	...	...	...	...	...	...	...	...	...	...	1		

Where articles are interchangeable with others on the same line

† Special for Mark IV.

* Special for 3 slides at Fort Westmorland.

Digitized by Google

and Spare parts for—*continued.*

| Slides, L. | | |

Slides, L, R.M.L.—Component

| Component and spare parts. | Slides, L. | | |

and Spare parts for—*continued.*

| Slides, L. | | |

Slides, L, R.M.L.—Component

Component and spare parts.	Slides, L.																														
	Small port.			Casemates, R.M.L																											
	12·5-in., 38 tons.			To work within length.				12·5-in., 38 tons.				11 or 12-in., 25 tons.	10-in.				9-in.			Single plate.										
				11 or 12-in., 25 tons.	10-in.			9-in.	6 ft. recoil.											11 or 12-in., 25 tons, to work within length.										
	7 ft. recoil.	6 ft. recoil, Marks II. and III.	10-in.		Mark I.	Mark II.	Special.		7 ft. recoil.	Marks II. and III.	Mark III., special.		Side.	Rear.	Side.	Rear.	Mark II.	Side.	Rear.	7-in.		9-in.	7-in.	R.M.L. 10·4 in., barbette.						
Cradles { cartridge	...	...	...	...	...	...	...	...	...	...	...	...	...	...	...	...	...	...	...	...	...	...	...	1						
{ projectile	...	...	...	...	...	...	...	...	...	...	...	...	...	...	...	...	...	...	...	...	...	...	...	1						
Derricks, loading	...	...	...	...	...	...	...	...	...	...	...	...	...	...	...	...	...	...	...	...	...	...	...	1						
Handles, winch, No. 30	...	...	...	...	...	...	...	...	...	...	...	...	...	...	...	...	...	...	...	...	...	...	...	2						
Pinions, spur, with spindle, 1st motion, 15 teeth	...	...	...	...	...	...	...	...	...	...	...	...	...	...	...	...	...	...	...	...	...	...	...	1						
Rammers, wood	...	...	...	...	...	...	...	...	...	...	...	...	...	...	...	...	...	...	...	...	...	...	...	1						
Ropes, steel wire { long	...	...	...	...	...	...	...	...	...	...	...	...	...	...	...	...	...	...	...	...	...	...	...	1						
{ short	...	...	...	...	...	...	...	...	...	...	...	...	...	...	...	...	...	...	...	...	...	...	...	1						
Sheaves, rope, with pin	...	...	...	...	...	...	...	...	...	...	...	...	...	...	...	...	...	...	...	...	...	...	...	2						
Spindles, rollers, { top	...	...	...	...	...	...	...	...	...	...	...	...	...	...	...	...	...	...	...	...	...	...	...	2						
guide ... { bottom	...	...	...	...	...	...	...	...	...	...	...	...	...	...	...	...	...	...	...	...	...	...	...	5						
Stops, buffer rammer, consisting of 1 bracket, 4 elastic pads, parting plates, and spindle, with nut and split key	...	...	...	...	...	...	...	...	...	...	...	...	...	...	...	...	...	...	...	...	...	...	...	1						
Supports, tube, loading wood, with bolts	...	...	...	...	...	...	...	...	...	...	...	...	...	...	...	...	...	...	...	...	...	...	...	1						
Tubes, rammer	...	...	...	...	...	...	...	...	...	...	...	...	...	...	...	...	...	...	...	...	...	...	...	1						
Wheels, spur, 103 teeth, with spindles, drum, and brake	...	...	...	...	...	...	...	...	...	...	...	...	...	...	...	...	...	...	...	...	...	...	...	1						
GEAR, STOP COMPRESSOR.																														
Counterweights, cast-iron, with screw	...	...	...	...	...	...	...	...	1	1	1	...	...	...	...	...	...	...	...	...	...	...	...	...						
Levers, iron, screw, compressor	...	...	...	...	...	...	...	...	1	1	1	...	...	...	...	...	...	...	...	...	...	...	...	...						
Nuts, metal, { adjusting screw	...	...	...	...	...	...	...	...	1	1	1	...	...	...	...	...	...	...	...	...	...	...	...	...						
{ compressor	...	...	...	...	...	...	...	...	1	1	1	...	...	...	...	...	...	...	...	...	...	...	...	...						
Pads, elastic, parting, compressor plates	...	...	...	...	...	...	...	...	2	2	2	...	...	...	...	...	...	...	...	...	...	...	...	...						
Pawls, iron, compressor lever	...	...	...	...	...	...	...	...	1	1	1	...	...	...	...	...	...	...	...	...	...	...	...	...						
Pins, iron, compressor plates, with split keys	...	...	...	...	...	...	...	...	2	2	2	...	...	...	...	...	...	...	...	...	...	...	...	...						
Plates, iron, compressor	...	...	...	...	...	...	...	...	2	2	2	...	...	...	...	...	...	...	...	...	...	...	...	...						
Screws, iron { adjusting	...	...	...	...	...	...	...	...	1	1	1	...	...	...	...	...	...	...	...	...	...	...	...	...						
{ compressor, with collar and nut	...	...	...	...	...	...	...	...	1	1	1	...	...	...	...	...	...	...	...	...	...	...	...	...						
GEAR, PREVENTOR.																														
Bars, iron, preventor	1	1	...	...	...	...	...	...	1	1	1	...	...	...	...	...	...	...	...	...	...	...	...	...						
Pins, iron, compressor bar, with split keys	2	2	...	...	...	...	...	...	1	1	1	...	...	...	...	...	...	...	...	...	...	...	...	...						

Where articles are interchangeable with others on the same line

Digitized by Google

and Spare parts for—*continued.*

| Slides, L. | | |

Slides, L., R.M.L.—Component

Component and spare parts.	Slides, L.																								
	Casemate, R.M.L.																								
	Small port.			To work within length.					12·5-in., 38 tons.													Single plate.			
	12·5-in., 38 tons.			10-in					6 ft. recoil.			11 or 12-in., 25 tons.	10-in.				9-in.			11 or 12-in., 25 tons, to work within length.			
	7 ft. recoil.	6 ft. recoil, Marks II. and III.	10-in.	11 or 12-in., 25 tons.	Mark I.	Mark II.	Special.	9-in.	7 ft. recoil.	Marks II. and III.	Mark III., special.	Side.	Rear.	Side.	Rear.	Mark II.	Side.	Rear.	7-in	11 or 12-in., 25 tons, to work within length.	9-in.	7-in.	R.M.L. 10·4-in., barbette.
Plates, iron, parting	1	1	...	...	...	...	...	...	1	1	1	...	...	...	...	...	...	...	...	...	...	...	...
Rings, felt, buffer, 4⅞-in. × ⅜-in., 1 5/16-in. hole	2	2	...	...	...	...	...	...	2	2	2	...	...	...	...	...	...	...	...	...	...	...	...
Spindles, iron, buffer, with nuts and split keys	1	1	...	...	...	...	...	...	1	1	1	...	...	...	...	...	...	...	...	...	...	...	...
Trippers, iron	1	1	...	...	...	...	...	...	1	1	1	...	...	...	...	...	...	...	...	...	...	...	...
GEAR, RUNNING IN AND OUT.																							
Bands, steel, brake	...	...	...	...	...	...	...	...	...	...	...	...	...	...	...	...	...	...	...	...	...	...	...
Blocks, metal, side tackle ...	...	...	...	...	...	...	...	...	...	...	...	...	...	...	...	...	...	...	...	...	...	...	4
Clutch, metal	...	...	...	...	...	...	...	...	...	...	...	...	...	...	...	...	...	...	...	...	...	...	...
Cover, spur wheel and pinion	...	...	...	...	...	...	...	...	...	...	...	...	...	...	...	...	...	...	...	...	...	...	2
Handles, winch	...	...	...	...	...	...	...	...	...	...	...	...	...	...	...	...	...	...	...	...	...	...	...
Levers, iron: adjusting brake bands	...	...	...	...	...	...	...	...	...	...	...	...	...	...	...	...	...	...	...	...	...	...	...
Levers, iron: brake	...	...	...	...	...	...	...	...	...	...	...	...	...	...	...	...	...	...	...	...	...	...	...
Levers, iron: clutch	...	...	...	...	...	...	...	...	...	...	...	...	...	...	...	...	...	...	...	...	...	...	...
Links, chain, iron, for repairs	...	...	...	...	...	...	...	...	...	...	...	...	...	...	...	...	...	...	...	...	...	...	...
Pinions, metal: clutch	...	...	...	...	...	...	...	...	...	...	...	...	...	...	...	...	...	...	...	...	...	...	...
Pinions, metal: shaft, 1st motion ..	...	...	...	...	...	...	...	...	...	...	...	...	...	...	...	...	...	...	...	...	...	...	2
Pins: steel, connecting brake band, with collar and split key	...	...	...	...	...	...	...	...	...	...	...	...	...	...	...	...	...	...	...	...	...	...	...
Pins: iron, with chain lever clutch	...	...	...	...	...	...	...	...	...	...	...	...	...	...	...	...	...	...	...	...	...	...	...
Pins: chain, iron, for repairs ...	...	...	...	...	...	...	...	...	...	...	...	...	...	...	...	...	...	...	...	...	...	...	...
Pins: screw, connecting chain, iron...	...	...	...	...	...	...	...	...	...	...	...	...	...	...	...	...	...	...	...	...	...	...	...
Shafts, iron: 1st motion... ...	...	...	...	...	...	...	...	...	...	...	...	...	...	...	...	...	...	...	...	...	...	...	2
Shafts, iron: 2nd ,, ...	...	...	...	...	...	...	...	...	...	...	...	...	...	...	...	...	...	...	...	...	...	...	2
Shafts, iron: 3rd ,, ...	...	...	...	...	...	...	...	...	...	...	...	...	...	...	...	...	...	...	...	...	...	...	...
Shafts, iron: brake	...	...	...	...	...	...	...	...	...	...	...	...	...	...	...	...	...	...	...	...	...	...	...
Socket, iron, adjusting, brake bands	...	...	...	...	...	...	...	...	...	...	...	...	...	...	...	...	...	...	...	...	...	...	...
Wheels: spur, metal, 2nd motion	...	...	...	...	...	...	...	...	...	...	...	...	...	...	...	...	...	...	...	...	...	...	2
GEAR, TRAVERSING AND RUNNING-BACK.																							
Axles, iron with split keys: roller, guide, chain, endless	...	...	...	...	...	...	...	...	...	...	...	...	...	...	...	...	...	...	...	...	...	...	...
Axles, iron with split keys: wheel, chain, endless	2	2	...	...	...	...	...	...	2	2	2	...	...	...	...	...	...	...	...	...	...	...	...

71 | 1
5816

Where articles are interchargeable with others on the same line

Digitized by Google

and Spare parts for—*continued.*

11 or 12-in., 25 tons.	10-in., Mark I.	10-in., E.O.C., Mark I.	10-in., Mark II.	9-in., Mark I.	9-in., Marks III. and IV.	12·5-in. converted, small port, Mark I.	7ft. parapet, C., R.M.L.	Slides, L. Dwarf, R.M.L. 12·5-in., 38 tons. Marks II. and III. C	D	12-in., 35 tons. C	11 or 12 in., 25 tons. A	C	10-in. A	C	D	9-in. A	C	D	7-in. A	C	D	Single plate. 9-in.	7-in.	7-in., 6½ tons., 6 ft. parapet.	Proportion of spare for each: Detached group of Sub-Districts.—per 10 guns, or less No. of each nature.	Sub-District.—per 10 guns, or less No. of each nature.	Fort or Battery.—per 10 guns, or less No. o each nature.
...	...	...	...	...	...	1	...	1	1	1	...	...	...	...	...	...	...	...	...	...	...	...	...	...	...	...	...
...	...	...	...	...	...	2	...	2	2	2	...	...	...	...	...	...	...	...	...	...	...	...	...	...	...	...	...
...	...	...	...	...	...	1	...	1	1	1	...	...	...	...	...	...	...	...	...	...	...	...	...	...	...	...	...
...	...	...	...	...	...	1	...	1	1	1	...	...	...	...	...	...	...	...	...	...	...	...	...	...	...	...	...
...	...	...	...	...	...	...	...	...	...	...	...	...	...	...	...	...	...	...	...	...	...	...	...	1	...	...	...
...	...	...	...	...	...	...	...	...	...	...	...	...	...	...	...	...	...	...	...	...	...	...	...	1	...	...	...
...	...	...	...	...	...	...	...	...	...	...	...	...	...	...	...	...	...	...	...	...	...	...	...	2	...	...	1
...	...	...	...	...	...	...	...	...	...	...	...	...	...	...	...	...	...	...	...	...	...	...	...	1	...	...	...
...	...	...	...	...	...	...	...	...	...	...	...	...	...	...	...	...	...	...	...	...	...	...	...	1	...	...	...
...	...	...	...	...	...	...	...	...	...	...	...	...	...	...	...	...	...	...	...	...	...	...	...	1	...	...	5
...	...	...	...	...	...	...	...	...	...	...	...	...	...	...	...	...	...	...	...	...	...	...	...	1	...	...	...
...	...	...	...	...	...	...	...	...	...	...	...	...	...	...	...	...	...	...	...	...	...	...	...	1	...	...	...
...	...	...	...	...	...	...	...	...	...	...	...	...	...	...	...	...	...	...	...	...	...	...	...	...	...	...	10
...	...	...	...	...	...	...	...	...	...	...	...	...	...	...	...	...	...	...	...	...	...	...	...	1	...	...	1
...	...	...	...	...	...	...	...	...	...	...	...	...	...	...	...	...	...	...	...	...	...	...	...	1	...	...	...
...	...	...	...	...	...	...	...	...	...	...	...	...	...	...	...	...	...	...	...	...	...	...	...	1	...	...	...
...	...	...	...	...	...	...	...	...	...	...	...	...	...	...	...	...	...	...	...	...	...	...	...	1	...	...	...
...	...	...	...	...	...	...	...	...	...	...	...	...	...	...	...	...	...	...	...	...	...	...	...	1	...	...	...
...	...	...	...	...	...	...	...	...	...	...	...	...	...	...	...	...	...	...	...	...	...	...	...	...	...	...	...
...	...	...	...	...	...	...	...	...	...	...	...	...	...	...	...	...	...	...	...	...	...	...	...	...	...	...	...
...	...	...	...	...	...	...	...	...	...	...	...	...	...	...	...	...	...	...	...	...	...	...	...	...	...	...	...
...	...	...	...	...	...	2	...	2	2	2	...	...	...	...	...	...	...	...	...	...	...	...	...	...	...	...	...

for which a supply of spare is laid down, they are shown in *italics.*

Digitized by Google

Slides, L., R.M.L.—Component

Component and spare parts.	Slides, L.																													
	Small port.			Casemate, R.M.L.																										
				To work within length.						12·5-in., 38 tons.																				
	12·5-in., 38 tons.				10-in.						6 ft. recoil.		11 or 12-in., 25 tons.		10-in.				9-in.				Single plate.						
	7 ft. recoil.	6 ft. recoil, Marks II. and III.	10-in.	11 or 12-in., 25 tons	Mark I.	Mark II.	Special.	9-in.	7 ft. recoil.	Marks II. and III.	Mark III., special.	Side.	Rear.	Side.	Rear.	Mark II.	Side.	Rear.	7-in.	11 or 12-in., 25 tons, to work within length.	9-in.	7-in.	R.M.L. 10·4-in., barbette.						
Bands, metal	1	1	...	...	...	...	...	...	1	1	1	...	...	...	...	...	...	...	...	...	...	...	...						
clutch iron	1	1	...	...	...	...	...	...	1	1	1	...	...	...	...	...	...	...	...	...	...	...	...						
Bearings, metal, nut, screw, adjusting	2	2	...	...	...	...	...	...	2	2	2	...	...	...	...	...	...	...	...	...	...	...	...						
Blocks, running-back, iron, with metal sheaves double	...	...	...	...	...	1	1	...	...	...	...	...	...	...	...	...	1	...	...	...	...	...	...						
treble	...	...	2	...	2	1	1	2	...	...	...	...	...	...	...	...	1	...	...	...	...	...	...						
	...	...	...	2	...	...	...	...	...	...	...	2	2	...	...	...	...	...	...	2	...	...	...						
Bollards, cast-iron	...	...	1	1	1	1	1	...	...	...	...	1	1	1	1	1	1	1	...	1	...	...	...						
Bushes, metal, fork, chain	2	2	...	...	...	...	...	...	2	2	2	...	...	...	...	...	...	...	...	...	...	...	...						
Chains, iron, endless	2	2	...	...	...	...	...	...	2	2	2	...	...	...	...	...	...	...	...	...	...	...	...						
Clutches cast-iron	...	...	...	...	...	...	...	...	...	...	...	...	...	...	...	...	...	...	...	...	...	...	...						
metal	...	...	...	...	...	...	...	...	...	...	...	...	...	...	...	...	...	...	...	...	...	...	...						
Collars, iron, with screws, shaft: iron, shaft, 2nd motion	...	...	...	...	...	...	1	...	...	...	...	...	...	...	...	...	...	...	...	...	...	...	...						
bollard	...	...	1	1	1	1	1	...	...	...	...	1	1	1	1	1	1	1	...	1	...	...	...						
clutch, pinion	2	2	...	...	...	...	...	...	2	2	2	...	...	...	...	...	...	...	...	...	...	...	...						
cross	...	...	...	...	1	...	...	...	...	...	...	...	...	...	...	...	1	...	...	...	...	...	...						
longitudinal	...	...	...	...	...	...	...	...	...	...	...	...	...	...	...	...	...	...	...	...	...	...	...						
sprocket wheel	...	...	...	...	...	...	...	...	2	2	2	...	...	...	...	...	...	...	...	...	...	...	...						
traversing	1	1	...	...	...	...	...	...	1	1	1	...	...	...	...	...	...	...	...	...	...	...	...						
winch handle	...	...	2	2	2	2	2	...	...	...	...	2	1	2	...	2	2	1	...	2	...	...	...						
2nd motion	...	...	...	1	...	...	...	...	2	2	2	...	...	...	...	...	...	...	...	...	...	...	...						
3rd ,,	...	...	...	...	1	...	...	...	...	...	...	...	...	...	...	...	...	...	...	...	...	...	...						
iron, thrust, shaft clutch, pinion, with taper pin	...	...	...	...	...	...	...	...	2	2	2	...	...	...	...	...	...	...	...	...	...	...	...						
steel, shaft, clutch, pinion	7	7	...	...	...	...	...	...	2	2	2	...	...	...	...	...	...	...	...	...	...	...	...						
Covers, iron, complete	1	1	1	1	1	2	1	2	...	...	...	1	...	1	...	1	...	...	...	1	...	...	...						
Discs, metal, pointer	1	1	...	...	...	...	...	...	1	1	1	...	...	...	...	...	...	...	...	...	...	...	...						
Forks, chain, iron, with nuts	2	2	...	...	...	...	...	...	...	...	...	...	...	...	...	...	...	...	...	...	...	...	...						
	...	...	...	...	...	...	...	...	2	2	2	...	...	...	...	...	...	...	...	...	...	...	...						
	...	...	...	...	...	...	...	...	...	...	...	...	...	...	...	...	...	...	...	...	...	...	...						
Guards, metal, wheel, spur and pinion... left	1	1	...	...	...	...	...	...	1	1	1	...	...	...	...	...	...	...	...	...	...	...	...						
right	1	1	...	...	...	...	...	...	1	1	1	...	...	...	...	...	...	...	...	...	...	...	...						
Handles, winch No. 4	2	2	...	...	...	...	...	...	2	2	2	...	...	...	...	...	...	...	...	...	...	...	...						
,, 5	...	...	2	2	2	...	2	2	...	...	...	2	...	2	...	2	...	...	...	2	...	...	...						
,, 6	...	...	...	...	...	2	...	...	...	...	...	...	...	...	...	...	...	...	...	...	...	...	...						
,, 7	...	...	...	...	...	...	...	...	...	...	...	1	...	...	1	...	...	1	...	...	...	...	...						
,, 8	...	...	...	...	...	...	...	...	...	...	...	...	...	...	...	...	2	...	...	...	...	...	...						
,, 9	...	...	...	...	...	...	...	...	...	...	...	...	...	...	...	...	...	...	...	...	...	...	...						
,, 31	...	...	...	...	...	...	...	...	...	...	...	...	...	...	...	...	...	...	...	...	...	...	1						
Keys, iron, driving bollard	...	...	2	...	2	2	2	2	...	...	...	2	2	...	...	...	...	...	...	2	...	...	...						
shaft	6	6	3	6	10	5	5	10	10	10	10	3	2	3	2	5	7	6	...	6	...	...	...						

71/1/5792

Where articles are interchangeable with others on the same line

Digitized by Google

and Spare parts for—*continued.*

| Slides, L. | | |

Slides, L, R.M.L.—Component

Component and spare parts.	Slides, L.																										
	Small port.			Casemate, R.M.L.																							
				To work within length.				12·5-in., 38 tons.			11 or 12-in., 25 tons.	10-in.				9-in.			Single plate.							
	12·5-in., 38 tons.				10-in.				6 ft. recoil.																		
	7 ft. recoil.	6 ft. recoil, Marks II. and III.	10-in.	11 or 12-in., 25 tons.	Mark I.	Mark II.	Special.	9-in.	7 ft. recoil.	Marks II. and III.	Mark III., special.	Side.	Rear.	Side.	Rear.	Mark II.	Side.	Rear.	7-in.	11 or 12-in., 25 tons, to work within length.	9-in.	7-in.	R.M.L. 10·4-in., barbette.				
Keys, bollard...	...	...	...	...	...	...	...	...	...	...	...	...	...	...	...	...	...	...	...	...	...	...	...				
steel, shaft, traversing ...	...	...	...	...	...	...	...	...	...	...	...	...	...	...	...	...	...	...	...	...	...	...	...				
driving spindle, winch handle	...	...	...	...	...	...	...	...	...	...	...	...	...	...	...	...	...	...	...	...	...	...	...				
Levers, iron. clutch	1	1	1	1	1	1	1	1	1	1	1	1	1	1	1	1	1	1	...	1	...	...	...				
Links, chain, iron (for repair)	...	...	...	...	...	...	...	...	...	...	...	...	...	...	...	...	...	...	...	...	...	...	...				
Nuts, metal, screw, adjusting, lever clutch	1	1	...	...	...	...	...	...	1	1	1	...	...	...	...	...	...	...	...	...	...	...	...				
Gudgeons, steel connecting, stage, loading, with screws...	...	...	...	...	...	...	...	...	...	...	...	...	...	...	...	...	...	...	...	...	...	...	...				
Pinions, M.C.I. or steel — bevel — double — 38 and 32 teeth ...	...	...	...	...	...	...	...	...	...	...	...	...	...	...	...	...	...	...	...	...	...	...	...				
30 teeth	...	...	...	...	...	...	...	...	...	...	...	...	...	...	...	...	...	...	...	...	...	...	...				
18 ,, ...	...	...	...	...	...	...	...	...	...	...	...	...	...	...	...	...	...	...	...	...	...	...	...				
15 ,, ...	...	...	...	...	...	...	...	...	...	...	...	...	...	...	...	...	...	...	...	...	...	...	...				
spindle, gudgeon, 15 teeth... ...	...	...	...	...	...	...	...	...	...	...	...	...	...	...	...	...	...	...	...	...	...	...	...				
2nd motion — 19 teeth ...	...	...	...	...	1	...	...	...	...	...	...	...	...	...	...	...	...	...	...	...	...	...	...				
2nd motion — 18 ,, ...	...	...	...	1	...	...	...	...	...	...	...	...	...	...	...	...	...	...	...	1	...	...	...				
bevel — shaft — 17 ,, left	...	...	...	...	...	1	...	...	...	...	...	...	...	...	...	1	...	...	...	...	...	...	...				
17 ,, right	...	...	...	...	...	1	...	...	...	...	...	...	...	...	...	1	...	...	...	...	...	...	...				
16 ,, ...	...	...	...	2	...	...	...	...	...	...	...	2	2	...	...	...	...	...	...	2	...	...	...				
cross — 16 ,, ...	...	...	...	...	...	...	2	...	...	...	...	...	...	2	2	...	...	...	...	...	...	...	...				
cross — 15 ,, ...	...	...	2	...	2	...	...	2	...	...	...	...	...	...	...	...	2	2	...	...	...	...	...				
cross — 14 ,, ...	...	...	...	...	...	...	...	...	...	...	...	...	...	...	...	...	...	...	...	...	...	...	...				
longitudinal — front — 18 teeth	...	...	...	...	...	...	...	...	...	...	...	...	...	...	...	...	...	...	...	...	...	...	...				
longitudinal — front — 16 ,,	...	...	...	...	...	...	...	...	...	...	...	...	...	...	...	...	...	...	...	...	...	...	...				
longitudinal — front — 15 ,,	...	...	...	...	...	...	...	...	...	...	...	...	...	...	...	...	...	...	...	...	...	...	...				
longitudinal — rear — 18 ,,	...	...	...	...	...	...	...	...	...	...	...	...	...	...	...	...	...	...	...	...	...	...	...				
longitudinal — rear — 15 ,,	...	...	...	...	...	...	...	...	...	...	...	...	...	...	...	...	...	...	...	...	...	...	...				
longitudinal — rear — 13 ,,	...	...	...	...	...	...	...	...	...	...	...	...	...	...	...	...	...	...	...	...	...	...	...				
bevel, shaft, traversing, 18 teeth	...	...	...	...	...	...	...	...	...	...	...	...	...	...	...	...	...	...	...	...	...	...	...				
bevel, shaft, winch handle — 19 teeth	...	...	...	...	...	...	...	...	...	...	...	1	...	...	...	...	1	...	...	...	...	...	...				
bevel, shaft, winch handle — 15 ,,	...	...	1	...	...	...	...	...	...	...	...	...	...	1	...	...	...	...	...	...	...	...	...				
bevel, shaft, winch handle — 12 ,,	...	...	...	...	...	...	1	...	...	...	...	...	...	...	...	1	...	...	...	...	...	...	...				

Where articles are interchangeable with others on the same line.

Digitized by Google

and Spare parts for—*continued*.

7 ft. parapet, C, R.M.L.								Slides, L.																										Proportion of spare for each		
								Dwarf, R.M.L.																														
								12·5-in., 38 tons.		12-in., 35 tons.	11 or 12-in., 25 tons.		10-in.			9-in.			7-in.			Single plate.																
11 or 12-in., 25 tons.	10-in., Mark I.	10-in., E.O.C., Mark I.	10-in., Mark II.	9-in., Mark I.	9-in., Marks III. and IV.	12·5-in. converted, small port, Mark I.		C	D	C	A	C	A	C	D	A	C	D	A	C	D															
								Marks II. and III.																														
											Rear.	Central.	Side.	Side.	Rear.	Central.	Side.	Side.	Rear.	Central.	Side.	Side.	A	C	D	9-in.	7-in.	7-in., 6½ tons, 6ft. parapet.							
...	...	...	...	2	...	...		...			...	...	...	...	...	...	...	...	...	...	...	...	...	...	...	...	...	...					2		
...	...	...	...	...	...	...		2	2		...	...	...	...	...	...	...	...	...	...	...	...	...	...	...	...	...	...							
1	1	1	...	1	1	1		1		1	1	2	1	1	1	1	1	1	1	1	1	1	...	...	...	...	...	...					...	10 for 38 & 35 tons	
...	...	...	...	...	...	...		1		1	1	...	...	...	...	...	...	...	...	...	...	...	...	...	...	...	...	...							
...	...	...	...	...	...	...		1		...	...	...	...	...	...	...	...	...	...	...	...	...	1	...	...	...	...	...					...	1	
...	...	...	...	...	...	...		...		...	...	...	...	...	...	...	...	1	...	...	...	...	...	...	...	...	...	...					...	1	
...	...	...	...	...	1	1		...		...	...	...	...	...	...	...	1	1	...	...	...	...	...	...	...	...	...	...					...	1	
1	...	...	...	...	...	...		...		...	...	1	1	...	...	...	...	...	...	...	...	...	...	...	...	...	...	...					...	1	
...	1	...	...	...	...	...		...		...	...	...	...	...	...	1	1	...	...	...	...	...	...	...	...	...	...	...					...	1	
...	...	...	...	1	...	...		...		...	...	...	...	...	...	...	...	...	...	...	...	...	...	...	...	...	...	...					...	1	
...	...	...	...	...	...	...		...		...	...	...	...	...	...	...	...	...	...	...	...	...	...	...	...	...	...	...					...

Slides, L, R.M.L.—Component

Component and spare parts.	Sides, L.																												
	Small port.			Casemate, R.M.L.																									
	12·5-in., 38 tons.			To work within length.				12·5-in., 38 tons.			11 or 12-in., 25 tons.		10-in.			9-in.			Single plate.									
				10-in.				6 ft. recoil.																					
	7 ft. recoil.	6 ft. recoil, Marks II. and III.	10-in.	11 or 12-in., 25 tons.	Mark I.	Mark II.	Special.	9-in.	7 ft. recoil.	Marks II. and III.	Mark III., special.	Side.	Rear.	Side.	Rear.	Mark II.	Side.	Rear.	7-in.	11 or 12-in., 25 tons, to work within length.	9-in.	7-in.	R.M.L. 10·4-in., barbette.						
Pinions, M.C.I. or steel — spur — shaft — mitre, shaft, cross, 15 teeth	...	...	...	...	...	...	...	1	...	...	...	...	...	...	...	...	...	...	...	...	...	...							
spur — shaft — 2nd motion — 21 teeth	...	...	...	...	...	...	1	...	...	...	...	...	...	...	...	...	...	...	...	...	...	...							
spur — shaft — 2nd motion — 13 ,,	...	...	...	...	1	...	...	...	...	...	...	...	...	...	...	...	...	...	...	...	...	...							
spur — shaft — 2nd motion — 12 ,,	...	...	...	...	...	...	...	2	2	2	...	...	...	...	...	...	...	...	...	...	...	...							
spur — shaft — 3rd motion — 20 ,,	...	...	...	...	...	1	...	...	...	...	...	...	...	...	...	...	...	...	...	...	...	...							
spur — shaft — 3rd motion — 18 ,,	...	...	...	2	...	...	...	...	...	...	...	...	...	...	...	...	...	...	...	...	...	...							
spur — shaft — 3rd motion — 13 ,,	...	...	...	1	...	...	...	2	...	...	...	...	...	...	...	...	...	...	...	1	...	...	...							
spur — shaft — front, 15 teeth	...	...	...	...	...	...	...	...	...	...	...	...	...	...	...	...	...	...	...	...	...	...							
spur — shaft — longitudinal — 13 teeth	...	...	...	...	...	...	...	...	...	...	...	...	...	...	...	...	...	...	...	...	...	...							
spur — shaft — longitudinal — 12 ,,	...	...	...	...	...	...	...	...	...	...	...	...	...	...	...	...	...	...	...	...	...	...							
spur — shaft — winch handle — 15 ,,	...	...	...	...	...	...	...	...	...	...	...	...	...	...	...	...	...	...	...	2	...	...							
spur — shaft — winch handle — 14 ,,	...	...	...	...	...	...	...	...	...	...	...	...	...	...	...	...	...	...	...	...	...	...							
spur — shaft — winch handle — 13 ,,	...	...	...	...	...	...	...	...	2	2	2	...	1	...	...	...	...	...	...	...	...	...							
spur — shaft — winch handle — 13 ,,	...	...	...	2	...	...	...	...	...	...	...	...	...	...	1	...	...	...	...	...	...	...							
spur — shaft — winch handle — 12 ,,	...	...	...	...	2	...	...	...	...	...	...	...	...	...	...	...	...	...	...	...	...	...							
spur — shaft — winch handle — 12 ,,	...	...	...	...	...	...	1	...	...	...	...	...	...	...	...	...	...	...	...	...	...	...							
spur — shaft — winch handle — 11 ,,	...	...	...	...	...	...	...	...	...	...	...	...	...	...	...	...	...	...	...	...	...	...							
spur — spindle — 2nd motion wineh handle — 12 teeth	...	...	...	...	...	...	...	...	...	...	...	...	...	...	...	...	...	...	...	...	...	...							
spur — spindle — 2nd motion wineh handle — 14 ,,	...	...	...	...	...	...	...	...	...	...	...	...	...	...	...	...	...	...	...	...	...	...							
spur — spindle — 2nd motion wineh handle — 11 ,,	...	...	...	...	...	...	...	...	...	...	...	...	...	...	...	...	...	...	...	...	...	...							
spur — spindle — 2nd motion wineh handle — 12 ,,	...	...	...	...	...	...	...	...	...	...	...	...	...	...	...	...	...	...	...	...	...	...							
Pinions, metal, bevel — clutch — 21 teeth	...	...	...	...	...	...	1	...	...	...	...	...	...	...	...	...	...	...	...	...	...	...							
Pinions, metal, bevel — clutch — 18 ,,	...	...	1	...	1	...	...	1	...	...	...	...	...	1	1	...	1	1	...	...	...	...							
Pinions, metal, bevel — clutch — 17 ,,	...	...	...	...	...	1	...	...	...	...	...	...	...	...	...	1	...	...	...	...	...	...							
Pinions, metal, bevel — clutch — 16 ,,	...	...	1	...	...	...	...	...	...	...	...	1	1	...	...	...	...	...	...	1	...	...							
Pinions, metal, bevel — clutch — 15 ,,	...	...	...	...	...	...	...	...	...	...	...	...	...	...	...	...	...	...	...	...	...	...							
Pinions, metal, bevel — clutch, friction — 22 ,,	...	...	...	...	...	...	...	...	...	...	...	...	...	...	...	...	...	...	...	...	...	...							
Pinions, metal, bevel — clutch, friction — 16 ,,	...	...	...	...	...	...	...	...	...	...	...	...	...	...	...	...	...	...	...	...	...	...							
Pinions, metal, bevel — clutch, friction — 14 ,,	1	1	...	...	...	...	...	...	1	1	1	...	...	...	...	...	...	...	...	...	...	...							
Pinions, metal, bevel — 2nd motion, 15 teeth	...	...	...	...	...	...	...	...	...	...	...	...	...	...	...	...	...	...	...	...	...	...							

Where articles are interchangeable with others on the same line

Digitized by Google

and Spare parts for—*continued.*

Slides, L.

| 7 ft. parapet, C, R.M.L. | | |

Slides, L, R.M.L.--Component

Component and spare parts.	Slides, L.																																
	Small port.			Casemate, R.M.L.																													
				To work within length.						12·5-in., 38 tons.			11 or 12-in., 25 tons.		10-in.				9-in.			Single plate.										
	12·5-in., 38 tons.				10-in.						6 ft. recoil.																						
	7 ft. recoil.	6 ft. recoil, Marks II. and III.	10-in.	11 or 12-in., 25 tons.	Mark I.	Mark II.	Special.	9-in.	7 ft. recoil.	Marks II and III.	Mark III., special.	Side.	Rear.	Side.	Rear.	Mark II.	Side.	Rear.	7-in.	11 or 12-in., 25 tons, to work within length.	9-in.	7-in.	R.M.L. 10·4-in., barbette.										
Pinions, metal																																	
bevel, shaft, winch-handle, 15 teeth	...	...	...	...	...	...	...	...	...	...	...	...	...	...	...	...	...	...	...	...	...	...	...										
bevel, shaft, transverse, 23 teeth	...	...	...	...	...	...	...	...	1	1	1	...	...	...	...	...	...	...	...	...	...	...	...										
bevel, shaft, transverse, 14 ,,	...	...	...	...	...	...	...	...	...	...	...	...	...	...	...	...	...	...	...	...	...	...	...										
bevel, shaft, transverse, 13 ,,	1	1	...	...	...	...	...	...	...	...	...	...	...	...	...	...	...	...	...	...	...	...	...										
bevel, shaft, and spur, 19 & 10 ,,	...	...	...	...	...	...	...	...	...	...	...	...	...	...	...	...	1	...	...	...	...	...	...										
bevel, shaft, and spur, 15 & 14 ,,	...	...	...	...	...	...	...	...	...	...	...	...	...	...	...	...	...	...	...	...	...	...	...										
bevel, spindle, winch-handle, 15 teeth	...	...	...	...	...	...	...	...	...	...	...	...	...	...	...	...	...	...	...	...	...	...	...										
spur, clutch, 12 teeth	...	...	...	...	...	...	...	...	...	...	...	...	...	...	...	...	...	...	...	...	...	...	...										
spur, clutch, 14 ,,	...	...	...	...	...	...	...	...	...	...	...	...	...	...	...	...	...	...	...	...	...	...	...										
spur, clutch, 26 ,,	...	...	...	...	...	...	...	...	...	...	...	...	...	...	...	...	...	...	...	...	...	...	...										
spur, clutch, friction, 1 tooth	1	1	...	...	...	...	...	...	1	1	1	...	...	...	...	...	...	...	...	...	...	...	...										
spur, shaft, winch-handle, 10 teeth	...	...	...	...	...	...	...	2	...	...	...	...	...	...	...	...	...	1	...	...	...	...	...										
spur, spindle, 2nd motion, 10 teeth	2	2	...	...	...	...	...	...	...	...	...	...	...	...	...	...	...	...	...	...	...	...	1										
spur, spindle, 3rd motion, 10 teeth	...	...	...	...	...	...	...	...	...	...	...	...	...	...	...	...	...	...	...	...	...	...	...										
spur, shaft, 2nd motion	...	...	...	...	...	...	...	...	...	...	...	...	...	...	...	...	...	...	...	...	...	...	1										
Pins, iron																																	
iron, spur, with spindles, 2nd motion, 11 teeth	...	...	...	...	...	...	...	...	...	...	...	...	...	...	...	...	...	...	...	...	...	...	...										
iron, spur, with spindles, 2nd motion, 10 ,,	...	...	...	...	...	...	...	...	...	...	...	...	...	...	...	...	...	...	...	...	...	...	...										
iron, spur, with spindles, 10 teeth	...	...	...	...	1	...	...	...	...	...	...	...	...	...	...	...	...	...	...	...	...	...	...										
iron, spur, with spindles, winch-handle, 10 teeth	...	...	2	2	...	...	...	...	...	...	...	...	...	...	...	...	...	...	...	...	...	...	...										
chain (for repairs)	...	...	...	...	...	...	...	...	...	...	...	...	...	...	...	...	...	...	...	...	...	...	...										
clutch lever, connecting	...	...	...	...	...	...	...	...	...	...	...	...	...	...	...	...	...	...	...	...	...	...	...										
clutch lever, joint, with collar and split key	...	...	1	1	1	1	1	1	...	...	...	1	1	1	1	1	1	1	1	1	...	...	...										
clutch lever, joint, with split key	...	...	...	...	...	...	...	...	1	1	1	...	...	...	...	...	...	...	...	...	...	...	...										
clutch lever, securing, with chain	...	...	1	1	1	1	1	1	...	...	...	1	1	1	1	1	1	1	1	...	1	...	...										
screw, connecting, chain (for repairs)	...	...	...	...	...	...	...	...	...	...	...	...	...	...	...	...	...	...	...	...	...	...	...										
Plates, friction																																	
clutch* metal	14	14	...	...	...	...	...	...	14	14	14	...	...	...	...	...	...	...	...	...	...	...	...										
clutch* steel	14	14	...	...	...	...	...	...	14	14	14	...	...	...	...	...	...	...	...	...	...	...	...										
metal, large, thick	...	...	...	...	...	...	...	...	...	...	...	...	...	...	...	...	...	...	...	...	...	...	...										
metal, large, thin	...	...	...	...	...	...	...	...	...	...	...	...	...	...	...	...	...	...	...	...	...	...	...										
metal, small, thick	...	...	...	...	...	...	...	...	...	...	...	...	...	...	...	...	...	...	...	...	...	...	...										
metal, small, thin	...	...	...	...	...	...	...	...	...	...	...	...	...	...	...	...	...	...	...	...	...	...	...										
steel, large	...	...	...	...	...	...	...	...	...	...	...	...	...	...	...	...	...	...	...	...	...	...	...										
steel, small	...	...	...	...	...	...	...	...	...	...	...	...	...	...	...	...	...	...	...	...	...	...	...										

Where articles are interchangeable with others on the same line

* 12 plates only for Mark II. casemate.

Digitized by Google

and Spare parts for—*continued*.

| Slides, L. | | |

Slides, L, R.M.L.—Component

Component and spare parts.	Slides, L.																														
	Small port.			Casemate, R.M.L.																											
				To work within length.					12·5-in., 38 tons.																						
	12·5-in., 38 tons.				10-in.					6 ft. recoil.			11 or 12-in., 25 tons.		10-in.				9-in.			Single plate.								
	7 ft. recoil.	6 ft. recoil, Marks II. and III.	10-in.	11 or 12 in., 25 tons.	Mark I.	Mark II.	Special.	9-in.	7 ft. recoil.	Marks II. and III.	Mark III., special.	Side.	Rear.	Side.	Rear.	Mark II.	Side.	Rear.	7-in.	11 or 12-in., 25 tons, to work within length.	9-in.	7 in.	R.M.L. 10·4-in., barbette.								
Pointers, steel indicator ...	1	1	...	...	...	...	...	...	1	1	1	...	...	...	...	...	...	...	...	...	...	...	...							
Rings, fork, { copper ...	6	6	...	...	...	...	...	...	6	6	6	...	...	...	...	...	...	...	...	...	...	...	...							
chain { indiarubber ...	8	8	...	...	...	...	...	...	8	8	8	...	...	...	...	...	...	...	...	...	...	...	...							
Rods, iron, connecting, clutch lever	...	...	...	...	...	...	...	...	...	...	...	...	...	...	...	...	...	...	...	...	...	...	...							
Rollers, iron, guide, chain, endless	...	...	...	...	...	...	...	...	...	...	...	...	...	...	...	...	...	...	...	...	...	...	...							
Screws { iron, adjusting, clutch lever, with collars and nut	1	1	...	...	...	...	...	...	1	1	1	...	...	...	...	...	...	...	...	...	...	...	...							
Screws { steel, joint, clutch lever, with taper pin	...	...	...	...	...	...	...	...	...	...	...	...	...	...	...	...	...	...	...	...	...	...	...							
Shafts iron { 2nd motion	...	...	...	...	1	1	1	...	1	2	2	2	...	...	...	...	...	...	...	...	1	...	...	1						
Shafts iron { 3rd ,, ...	...	...	...	...	1	1	...	1	1	...	...	...	...	...	...	...	...	...	...	...	1	...	...	1						
Shafts iron { bollard	...	...	1	1	1	1	1	1	...	...	...	1	1	1	1	1	1	1	1	...	1	...	...							
Shafts iron { clutch pinion	1	1	...	...	...	...	...	...	1	1	1	...	...	...	...	...	...	...	...	...	...	...	...							
Shafts iron { cross	...	...	2	2	2	*2	2	2	...	...	...	2	2	2	2	*2	2	2	..	2	...	...	...							
Shafts iron { longitudinal	...	...	...	...	...	...	...	1	...	...	...	...	...	...	...	...	...	...	...	...	..	...	...							
Shafts steel { traversing	1	1	...	...	...	...	...	...	1	1	1	...	...	...	...	...	...	...	...	...	...	...	...							
Shafts steel { wheel, sprocket ...	1	1	...	...	...	...	...	...	1	1	1	...	...	...	...	...	...	...	...	...	...	...	...							
Shafts steel { winch handle	...	...	1	2	2	1	1	2	2	2	2	1	1	1	1	1	1	1	...	2	..	..	1							
Spindles, iron { traversing	...	...	...	...	...	...	...	...	...	...	...	...	...	...	...	...	...	...	...	...	...	...	...							
Spindles, iron { wheel, sprocket ...	...	...	...	...	...	...	...	...	...	...	...	...	...	...	...	...	...	...	...	...	...	...	...							
Spindles, iron { 2nd motion	...	...	...	...	...	...	...	...	...	...	...	...	...	...	...	...	...	...	...	...	...	...	...							
Spindles, iron { 2nd motion, with collar { and keep screw nut and key	2	2	...	...	...	...	...	...	...	...	...	...	...	...	1	...	...	...	...	...	...	...	...							
Spindles, iron { 2nd motion, with collar { screw and nut	...	...	...	...	...	...	...	...	...	...	...	...	...	...	...	...	...	...	...	...	...	...	...							
Spindles, iron { 2nd motion, with key and collar, with set screw	...	...	...	...	...	...	...	...	...	...	...	...	...	...	...	...	...	...	...	...	...	...	...							
Spindles, iron { 3rd motion, with collars, nut, and key	...	...	...	...	...	...	...	...	...	...	...	...	...	...	...	...	...	...	...	...	...	...	...							
Spindles, iron { gudgeon, with collars { and split key	...	...	...	...	...	...	...	...	...	...	...	...	...	...	...	...	...	...	...	...	...	...	...							
Spindles, iron { gudgeon, with collars { nut and pins	...	...	...	...	...	...	...	...	...	...	...	...	...	...	...	...	...	...	...	...	...	...	...							
Spindles, iron { gudgeon, with collar, { 2nd motion pinion bevel	...	...	1	...	1	...	1	1	...	...	...	1	...	1	...	1	1	...	...	...	...	...	...							
Spindles, iron { gudgeon, with collar, { double	...	...	...	...	...	...	...	...	...	...	...	...	...	...	...	...	...	...	...	...	...	...	...							
Spindles, iron { complete { wheel, spur	...	...	...	...	...	...	...	...	...	...	...	1	1	...	...	...	...	...	...	...	...	...	...							
Spindles, iron { winch handle, with collar and set screw	...	...	...	...	...	...	...	...	...	...	...	...	...	...	...	...	...	...	...	...	...	...	...							

Where articles are interchangeable with others on the same line

* 1 long and 1 short.

Digitized by Google

and Spare parts for—*continued*.

11 or 12-in., 25 tons.	10-in., Mark I.	10-in., E.O C., Mark I.	10-in., Mark II.	9-in., Mark I.	9-in., Marks III. and IV.	12·5-in., converted small port, Mark I.	12·5-in., 38 tons.	12-in., 35 tons.	11 or 12-in., 26 tons.	10 in.			9-in.			7-in.			Single plate.	7-in, 6½ tons, 6 ft. parapet.	Detached group of Sub-Districts.—per 10 guns, or less No. of each nature.	Sub-District.—per 10 guns, or less No. of each nature.	Fort or Battery.—per 10 guns, or less No. of each nature.
7 ft. parapet, C., R.M.L.							Slides, L. Dwarf, R.M.L.																
						C	C	D	C	A	C	D	A	C	D	A	C	D					
							Marks II. and III.			Rear.	Central.	Side.	Side.	Rear.	Central.	Side.	Side.	Rear.	Central.	Side.	Side.	A	C	D					
...	...	...	...	...	...	1	1	1	...	...	...	...	...	...	...	...	...	...	...	...	...	...	...	...	...	...	...	...	...
...	...	...	...	...	...	6	6	6	...	...	...	...	...	...	...	...	...	...	...	...	...	...	...	...	...	...	...	...	...
...	...	...	...	...	...	8	8	8	...	...	...	...	...	...	...	...	...	...	...	...	...	...	...	...	...	...	...	...	...
...	...	...	...	...	...	...	...	1	...	...	...	...	...	...	...	...	...	...	...	...	...	...	...	...	...	...	...	...	...
...	...	...	...	...	...	...	2	2	2	...	...	...	...	...	...	...	...	...	...	...	...	...	...	...	...	...	...	...	...
...	...	...	...	...	...	1	1	1	...	...	...	...	...	...	...	...	...	...	...	...	...	...	...	...	...	...	...	...	...
...	...	1	...	...	...	...	...	...	...	...	...	...	...	...	...	...	...	...	...	...	...	...	...	...	...	...	...	...	...
1	1	...	...	1	...	...	2	2	1	...	...	...	1	...	...	...	...	...	...	...	...	...	...	...	...	...	...	...	...
1	...	...	...	...	...	...	...	...	...	...	...	...	...	...	...	...	...	...	...	...	...	...	...	...	...	...	...	...	...
1	1	1	1	1	1	...	...	...	1	1	1	1	1	1	1	...	1	1	1	...	...	...	...	...	...	...	...	...	...
...	...	1	...	...	...	1	1	1	...	...	...	...	2	2	...	...	...	1	...	...	...	...	...	...	...	...	...	...	...
1	1	1	1	1	1	...	...	...	2	...	*2	1	...	...	1	1	1	1	...	...	...	...	...	...	...	...	...	...	...
...	...	...	...	...	...	...	1	1	1	...	...	...	...	...	...	...	...	...	...	...	...	...	...	...	...	...	...	...	...
...	...	...	...	...	...	...	1	1	1	...	...	...	...	...	...	...	...	...	...	...	...	...	...	...	...	...	...	...	...
1	1	...	...	1	...	...	2	2	2	1	1	1	1	1	1	1	1	1	...	...	...	...	...	...	...	...	...	...	...
...	...	...	...	...	...	1	...	...	...	...	...	...	...	...	...	...	...	...	...	...	...	...	...	...	...	...	...	...	...
...	...	...	...	...	...	1	...	...	...	...	...	...	...	...	...	...	...	...	...	...	...	...	...	...	...	...	...	...	...
...	...	...	...	...	...	...	...	...	...	...	1	...	...	...	...	...	1	...	...	...	...	...	...	...	...	...	...	...	...
...	...	...	...	...	...	...	...	...	...	...	...	...	...	...	...	...	...	...	...	...	...	...	...	...	...	...	...	...	...
...	...	...	...	...	...	...	...	...	...	1	...	...	...	...	...	...	...	...	...	...	...	...	...	...	...	...	...	...	...
...	...	...	...	...	1	...	...	...	...	...	...	...	...	...	...	...	...	...	...	...	...	...	...	...	...	...	...	...	...
...	...	...	...	...	...	2	...	...	...	...	...	...	...	...	...	...	...	...	...	...	...	...	...	...	...	...	...	...	...
...	...	...	...	...	...	...	...	1	...	...	...	...	...	...	...	...	...	...	...	...	...	...	...	...	...	...	...	...	...
...	...	...	1	...	1	...	...	...	...	...	...	...	...	...	...	...	...	...	...	...	...	...	...	...	...	...	...	...	...
1	1	...	...	1	...	...	...	...	...	1	1	...	...	1	1	...	1	1	...	...	...	...	...	...	...	...	...	...	...
...	...	...	...	...	1	...	...	...	...	...	...	...	...	...	...	...	...	...	...	...	...	...	...	...	...	...	...	...	...
...	...	...	...	...	...	...	...	...	...	...	...	...	...	...	...	...	...	...	...	...	...	...	...	...	...	...	...	...	...

for which a supply of spare is laid down, they are shown in *italics*.

Digitized by Google

Slides, L, R.M.L.—Component

| Component and spare parts. | Slides, L. | | |

and Spare parts for—*continued.*

| Slides, L. | | |

Slides L., R.M.L.—Component

Component and spare parts.	Slides, L.																														
	Small port.			Casemate, R.M.L.																											
				To work within length.					12·5 in., 38 tons.			11 or 12 in., 25 tons.	10-in.			9-in.			Single plate.										
	12·5-in., 38 tons.				10-in.				6 ft. recoil.																					
	7 ft. recoil.	6 ft., recoil, Marks II. and III.	10-in.	11 or 12-in., 25 tons.	Mark I.	Mark II.	Special.	9-in.	7 ft. recoil.	Marks II. and III.	Mark III., special.	Side.	Rear.	Side.	Rear.	Mark II.	Side.	Rear.	7-in.	11 or 12 in., 25 tons. to work within length.	9-in.	7-in.	R.M.L. 10·4-in., barbette.							
Wheels, M. cast-iron or steel — bevel, shaft — traversing — 28 teeth	...	...	...	...	...	...	...	...	...	...	...	...	...	...	...	...	...	...	...	...	...	...	...							
traversing — 27 ,,	...	...	...	...	...	...	...	...	...	...	...	...	...	...	...	...	...	...	...	...	...	...	...							
traversing — 23 ,,	...	...	...	...	...	...	...	...	...	...	...	...	...	...	...	...	...	...	...	...	...	...	...							
traversing — 18 ,,	1	1	...	...	...	...	...	...	1	1	1	...	...	...	...	...	...	...	...	...	...	...	...							
spindle, pinion — 27 ,,	...	...	...	...	...	...	...	...	...	...	...	...	...	...	...	...	...	...	...	...	...	...	...							
spindle, pinion — 19 ,,	...	...	...	...	1	...	...	...	...	...	...	...	...	...	...	...	...	...	...	...	...	...	...							
spindle, 2nd motion, 35 teeth	...	...	...	...	...	...	...	...	...	...	...	...	...	...	...	...	...	...	...	...	...	...	...							
spur — 2nd motion — 70 teeth	3	2	..	..	..	..	..	..	2	2	2	..	..	..	..	..	..	..	..	..	..	..	..							
62 ,,	...	...	...	...	...	...	...	...	...	...	...	...	...	...	...	...	...	...	...	...	...	...	...							
60 ,,	...	...	...	...	...	...	...	...	...	...	...	...	...	...	...	...	...	...	...	...	...	...	...							
46 and 14 teeth	...	...	...	...	...	...	...	...	...	...	...	1	1	...	...	...	...	...	...	...	...	...	...							
46 and 13 ,,	...	...	...	...	...	...	...	...	...	...	...	...	...	...	1	...	...	...	...	...	...	...	...							
46 and 12 ,,	...	...	...	...	...	...	...	...	...	...	...	...	...	...	...	...	...	...	...	...	...	...	...							
44 teeth	...	...	...	...	...	...	...	...	...	...	...	...	...	...	...	...	...	...	...	...	...	...	1							
38 ,,	...	...	...	...	...	...	...	...	...	...	...	...	...	...	...	...	...	...	...	...	...	...	...							
36 ,,	...	...	...	...	...	...	...	...	...	...	...	...	...	...	...	...	...	...	...	2	...	...	...							
28 ,,	...	...	...	2	...	...	...	...	...	...	...	...	...	...	...	...	...	...	...	...	...	...	...							
25 ,,	...	...	...	...	...	...	...	...	...	...	...	...	...	...	...	...	...	...	...	...	...	...	...							
23 ,,	...	...	...	...	1	...	...	...	...	...	...	...	...	...	...	...	...	...	...	...	...	...	...							
20 and 15 teeth	...	...	...	...	...	...	1	...	...	...	...	...	...	...	...	...	...	...	...	...	...	...	...							
3rd motion, 79 and 12 teeth	...	...	...	...	...	...	...	...	...	...	...	...	...	...	...	...	...	...	...	...	...	...	...							
3rd motion, 70 teeth	...	...	...	...	...	...	...	...	...	...	...	...	...	...	...	...	...	...	...	...	...	...	...							
clutch — 23 teeth	...	...	...	...	...	...	...	...	...	...	...	...	...	...	...	...	...	...	...	...	...	...	...							
clutch — 19 ,,	...	...	...	...	...	...	...	...	...	...	...	...	...	...	...	...	...	...	...	...	...	...	...							
shaft, bollard, 65 teeth	...	...	...	...	...	1	...	...	...	...	...	...	...	...	...	1	...	...	...	...	...	...	...							
shaft — bollard — 62 teeth	...	...	...	...	1	...	...	...	...	...	...	...	...	...	1	...	...	...	...	...	...	...	...							
shaft — bollard — 46 ,,	...	...	...	...	...	...	...	...	...	...	...	1	1	...	...	...	...	...	...	1	...	...	...							
shaft — bollard — 19 ,,	...	...	...	...	...	...	1	...	...	...	...	...	...	...	...	...	...	...	...	...	...	...	...							
shaft — clutch pinion — 36 ,,	...	...	...	...	...	...	...	...	...	...	...	...	...	...	...	...	...	...	...	...	...	...	...							
shaft — 3rd motion, 29 ,,	2	2	..	..	..	..	..	..	2	2	2	..	..	..	..	..	..	..	..	..	..	..	1							

Where articles are interchangeable with others on the same line

Digitized by Google

and Spare parts for—*continued.*

| Slides L. | | |

Slides, L, R.M.L.—Component

Component and spare parts.	Slides, L.																														
	Small port.			Casemate, R.M.L.																											
				To work within length.						12·5- n., 38 tons.			11 or 12-in. 25 tons.		10-ir.			9-in.			Sing'e plate.									
	12·5-in. 38 tons.			10-in.						6 ft. recoil																					
	7 ft. recoil.	6 ft. recoil, Marks II. and III.	10-inch.	11 or 12-in., 25 tons.	Mark I.	Mark II.	Special.	9-in.	7 ft. recoil.	Marks II. and III.	Mark III., special.	Side.	Rear.	Side.	Rear.	Mark II.	Side.	Rear.	7-in.	11 or 12-in., 25 tons, to work within length.	9-in.	7-in.	R. M. L. 10·4-in., barbette.								
Wheels — M. cast-iron or steel spur — shaft — longitudinal — 32 teeth	...	...	...	...	...	...	...	...	...	...	...	...	...	...	...	...	...	...	...	...	...	...	...							
27 ,,	...	...	...	...	...	...	...	...	...	...	...	...	...	...	...	...	...	...	...	...	...	...	...							
23 ,,	...	...	...	...	...	...	...	...	...	...	...	...	...	...	...	...	...	...	...	...	...	...	...							
21 ,,	...	...	...	...	...	...	...	1	...	...	...	...	...	...	...	...	...	...	...	...	...	...	...							
20 ,,	...	...	...	...	...	...	...	...	...	...	...	...	...	...	...	...	...	...	...	...	...	...	...							
wheel, sprocket — 30 teeth	...	...	...	...	...	...	...	...	1	1	1	...	...	...	...	...	...	...	...	...	...	...	...							
25 ,,	1	1	...	...	...	...	...	...	...	...	...	...	...	...	...	...	...	...	...	...	...	...	...							
spindle — 2nd motion — 62 ,,	...	...	...	...	...	...	...	...	...	...	...	...	...	...	...	...	...	...	...	...	...	...	...							
46 ,,	...	...	...	...	1	...	...	...	...	...	...	...	...	...	...	...	...	...	...	...	...	...	...							
gudgeon — 23 ,,	...	...	...	...	...	...	...	...	...	...	...	...	...	...	...	...	...	...	...	...	...	...	...							
21 ,,	...	...	...	...	...	...	...	1	...	...	...	...	...	...	...	...	...	...	...	...	...	...	...							
iron — chain, endless	2	2	...	...	...	...	...	...	2	2	2	...	...	...	...	...	...	...	...	...	...	...	...							
sprocket	2	2	...	...	...	...	...	...	2	2	2	...	...	...	...	...	...	...	...	...	...	...	...							
metal, hand, screw adjusting, clutch lever	1	1	...	...	...	...	...	...	1	1	1	...	...	...	...	...	...	...	...	...	...	...	...							
STAGES, LOADING.																														
Axles, steel — roller, racer, with collar and taper pin	...	...	...	...	...	...	...	...	...	...	...	...	...	...	...	...	...	...	...	...	...	...	...							
truck, with nut and split key	...	...	...	...	...	...	...	...	...	...	...	...	...	...	...	...	...	...	...	...	...	...	...							
Bands — iron, pivot	...	...	...	...	...	...	...	...	...	...	...	...	...	...	...	...	...	...	...	...	...	...	...							
metal, pivot	...	...	...	...	...	...	...	...	...	...	...	...	...	...	...	...	...	...	...	...	...	...	...							
Boards, chequered, with bolts sets	...	...	...	...	...	...	...	...	...	...	...	...	...	...	...	...	...	...	...	...	...	...	...							
Brackets, with bolts or screws — iron, rod, releasing ...	...	...	...	...	...	...	...	...	...	...	...	...	...	...	...	...	...	...	...	...	...	...	...							
M.C.I., or steel — brake — left...	...	...	...	...	...	...	...	...	...	...	...	...	...	...	...	...	...	...	...	...	...	...	...							
right	...	...	...	...	...	...	...	...	...	...	...	...	...	...	...	...	...	...	...	...	...	...	...							
roller, racer	...	...	...	...	...	...	...	...	...	...	...	...	...	...	...	...	...	...	...	...	...	...	...							
Frames, iron, angle, supporting front, with bolts	...	...	...	...	...	...	...	...	...	...	...	...	...	...	...	...	...	...	...	...	...	...	...							
Flanges, iron, truck ... pairs	...	...	...	...	...	...	...	...	...	...	...	...	...	...	...	...	...	...	...	...	...	...	...							
Gliders, iron, with bolts or screws —	...	...	...	...	...	...	...	...	...	...	...	...	...	...	...	...	...	...	...	...	...	...	...							
connecting pivot hand	...	...	...	...	...	...	...	...	...	...	...	...	...	...	...	...	...	...	...	...	...	...	...							
stage, loading ...	...	...	...	...	...	...	...	...	...	...	...	...	...	...	...	...	...	...	...	...	...	...	...							
Ladders, iron, with bolts ...	...	...	...	...	...	...	...	...	...	...	...	...	...	...	...	...	...	...	...	...	...	...	...							

Where articles are interchangeable with others on the same line

Digitized by Google

and Spare parts for—*continued.*

| Slides, L. | | |

Slides, L., R.M.L.—Component

Component and spare parts.	Slides, L.																															
	Small port.			Casemate, R.M.L.																												
				To work within length.					12·5-in., 38 tons.																							
	12·5-in., 38 tons.											6-ft. recoil.																				
	7 ft. recoil.	6 ft. recoil, Marks II. and III.	10-in.	11 or 12-in., 25 tons.	10-in. Mark I.	10-in. Mark II.	10-in. Special.	9-in.	7-ft. recoil.	Marks II. and III.	Mark III., special.	11 or 12-in. 25 tons.	10-in. Side	10-in. Rear.	10-in. Side.	10-in. Rear.	10-in. Mark II.	9-in. Side.	9-in. Rear.	7-in.	11 or 12-in., 25 tons, to work within length.	9-in.	7-in.	R.M.L. 10·4-in. barbette.							
Pedestals, M.C.S., derrick, with bolts	...	...	...	...	...	...	...	...	...	...	...	...	...	...	...	...	...	...	...	...	...	...	...	...							
Plates, iron { chequered ... sets	...	...	...	...	...	...	...	...	...	...	...	...	...	...	...	...	...	...	...	...	...	...	...	...							
{ connecting frames,	...	...	...	...	...	...	...	...	...	...	...	...	...	...	...	...	...	...	...	...	...	...	...	...							
{ supporting	...	...	...	...	...	...	...	...	...	...	...	...	...	...	...	...	...	...	...	...	...	...	...	...							
Rails, hand, iron, with stanchions	...	...	...	...	...	...	...	...	...	...	...	...	...	...	...	...	...	...	...	...	...	...	...	...							
Rollers, metal, racer	...	...	...	...	...	...	...	...	...	...	...	...	...	...	...	...	...	...	...	...	...	...	...	...							
Stays, iron { diagonal { pairs ...	...	...	...	...	...	...	...	...	...	...	...	...	...	...	...	...	...	...	...	...	...	...	...	...							
{ with bolts	...	...	...	...	...	...	...	...	...	...	...	...	...	...	...	...	...	...	...	...	...	...	...	...							
{ ladder, with bolts ...	...	...	...	...	...	...	...	...	...	...	...	...	...	...	...	...	...	...	...	...	...	...	...	...							
{ steel, diagonal ... pairs	...	...	...	...	...	...	...	...	...	...	*	...	...	...	...	...	...	...	...	...	...	...	...	...							
Steps, iron, with bolts	...	...	...	...	...	...	...	...	...	...	...	...	...	...	...	...	...	...	...	...	...	...	...	...							
Transoms, steel, connecting, rear, with bolts and bearing plates for gudgeon	...	...	...	...	...	...	...	...	...	...	...	...	...	...	...	...	...	...	...	...	...	...	...	...							
Trucks, M.C.S.	...	...	...	...	...	...	...	...	...	...	...	...	...	...	...	...	...	...	...	...	...	...	...	...							
Gear, loading—																																
Bands, steel, friction, brake drum	...	...	...	...	...	...	...	...	...	...	...	...	...	...	...	...	...	...	...	...	...	...	...	...							
Blocks, sheave, single, derrick	...	...	...	...	...	...	...	...	...	...	...	...	...	...	...	...	...	...	...	...	...	...	...	...							
Derricks, with sheaves and pins	...	...	...	...	...	...	...	...	...	...	...	...	...	...	...	...	...	...	...	...	...	...	...	...							
Drums, brake	...	...	...	...	...	...	...	...	...	...	...	...	...	...	...	...	...	...	...	...	...	...	...	...							
Handles, winch { No. 1 ...	...	...	...	...	...	...	...	...	...	...	*	...	...	...	...	...	...	...	...	...	...	...	...	...							
{ ,, 2 ...	...	...	...	...	...	...	...	...	...	...	*	...	...	...	...	...	...	...	...	...	...	...	...	...							
Levers, iron, brake, with counterweight, bolt, studs, collar and key	...	...	...	...	...	...	...	...	...	...	...	...	...	...	...	...	...	...	...	...	...	...	...	...							
Pawls, steel, brake drum ...	...	...	...	...	...	...	...	...	...	...	...	...	...	...	...	...	...	...	...	...	...	...	...	...							
Rods, iron, releasing, with pin, collar and key	...	...	...	...	...	...	...	...	...	...	...	...	...	...	...	...	...	...	...	...	...	...	...	...							
Ropes, steel wire	...	...	...	...	...	...	...	...	...	...	...	...	...	...	...	...	...	...	...	...	...	...	...	...							
Shafts, steel, brake drum, with collar and screws	...	...	...	...	...	...	...	...	...	...	...	...	...	...	...	...	...	...	...	...	...	...	...	...							
Spindles, steel, lever, brake, with collar, nut and pin	...	...	...	...	...	...	...	...	...	...	...	...	...	...	...	...	...	...	...	...	...	...	...	...							
Springs, steel, pawl, brake drum	...	...	...	...	...	...	...	...	...	...	...	...	...	...	...	...	...	...	...	...	...	...	...	...							
Wheels, metal, ratchet ...	...	...	...	...	...	...	...	...	...	...	...	...	...	...	...	...	...	...	...	...	...	...	...	...							
Windlass, iron	...	...	...	...	...	...	...	...	...	...	...	...	...	...	...	...	...	...	...	...	...	...	...	...							

Where articles are interchangeable with others on the same line

* Per Stage.

Digitized by Google

and Spare parts for—*continued.*

| Slides, L. | | |

BEDS AND CARRIAGES FOR MEDIUM ORDNANCE,

Component and spare parts.	Beds.				Carriages. Garrison, Wood.							
		Howitzer R.M.L.			R.B.L.		R.M.L.			S.B.		
			Steel.									
	Mortar, naval, with octagonal deck, 13-in., 100 cwt.	Iron, 8-in.	6·6-in.	6·3-in.	No. 18, converted naval, 7-in. 72 cwt.	Nos. 15 to 17, 7-in. Nos. 19 to 20, 40-pr.	Nos. 21, 22, 80-pr., S.B. 68-pr.	No. 23, 71 cwt., and S.B. 8-in. 65 cwt. No. 24, 58 cwt., and S.B. 32-pr. 58 cwt. No. 25, 58 cwt.	68-pr., 112 cwt., 8-in., 54 cwt. 32-pr., 63 cwt., 50 cwt., 24 and 18-pr.	Howitzer, 10 and 8-in.		
Arcs, compressor gear { adjusting ...	...	1	1	1	...	...	...	...	...	...		
compressor...	...	1	1	1	...	...	...	...	...	...		
Arms radial, iron, with retaining { left	...	...	...	...	...	...	...	...	...	...		
chain ... ... { right	...	...	...	...	...	...	...	...	...	...		
Axles { iron, roller, with split keys... ... {	...	...	...	...	...	...	...	...	...	...		
	...	...	...	...	2*	2	2	2	2	2		
					2†	...	...	...	...	...		
steel, roller { with split key... ...	...	6	6	6	...	...	...	...	...	...		
with { front and rear	...	...	...	...	...	...	...	...	...	...		
nuts { intermediate	...	...	...	...	...	...	...	...	...	...		
and pins { front	...	...	...	...	...	...	...	...	...	...		
rear and intermediate	...	...	...	...	...	...	...	...	...	...		
transporting bed, howitzer, R.M.L....	...	1	1	1	...	...	...	...	...	...		
Bands, iron, securing, hydraulic buffer ... ... { front	...	...	...	...	...	...	...	...	...	...		
rear	...	...	...	...	...	...	...	...	...	...		
Bars, iron { connecting piston rod ...	...	...	...	...	...	...	...	...	...	...		
supporting compressor plates...	...	...	...	...	...	...	...	...	...	...		
Bearings { box, screw, elevating, with bolts	...	12	1	...	...	...	...	...	...	...		
with screws, axles, roller...	...	12	12	12	...	...	...	...	...	...		
axletree, transporting ...	...	2	2	2	...	...	...	...	...	...		
metal { compressor { adjusting shaft	...	...	...	...	...	...	...	...	...	...		
compressor screw	...	1	1	1	...	...	...	...	...	...		
gear { adjusting screw	...	1	1	1	...	...	...	...	...	...		
pinion spindle, elevating...	...	1	1	3	...	...	...	...	...	...		
spindle, mitre wheel ...	...	...	...	...	...	...	...	...	...	...		
iron, with screws, axles, roller ...	...	...	...	...	...	...	...	...	...	...		
Beds { body	1	1	1	1	...	...	...	...	...	...		
iron	...	...	...	...	...	1	1	1	1	1		
wood	...	...	...	...	1	...	...	...	...	...		

Where articles are interchangeable with others on the same line for
* Front. † Rear.

Digitized by Google

COMPONENT AND SPARE PARTS FOR.

| Carriages. | | |

Beds and Carriages for Medium Ordnance

Component and spare parts.	Beds.				Carriages. Garrison, Wood.						
		Howitzer R.M.L.			R.B.L.		R.M.L.			S.B.	
	Mortar, naval, with octagonal deck, 13-in., 100 cwt.	Iron, 8-in.	Steel. 6·6-in.	Steel. 6·3-in.	No. 18, converted naval, 7-in., 72 cwt.	Nos. 15 to 17, 7-in. Nos. 19 to 20, 40-pr.	Nos. 21, 22, 80-pr., 68-pr.	No. 23, 71 cwt., and 8-in., 65 cwt. No. 24, 58 cwt., and 32-pr., 58 cwt. No. 25, 56 cwt.	68-pr., 112 cwt., 8-in., 54 cwt., 32-pr., 63 cwt., 50 cwt., 24 and 18-pr.	Howitzer, 10 and 8-in.	
Blocks, wood — buffer front, with bolts	...	...	...	...	...	...	...	...	...	...	
Blocks, wood — swing	...	...	...	...	1	...	...	...	...	...	
Blocks, wood — trunnion, transporting bed, howitzer, R.M.L.	...	1	1	1	...	...	...	...	...	...	
Bolsters, wood, with wedge	1	...	...	...	...	...	...	...	...	...	
Bolts — iron, connecting bed, with nuts and split keys	...	...	...	...	...	...	...	...	...	...	
Bolts — steel, housing, with bracket	...	...	...	...	...	...	...	...	...	...	
Boxes, iron, screw elevating	...	...	...	...	...	...	...	...	...	...	
Brackets, transporting bed, howitzer, R.M.L. — left	...	1	1	1	...	...	...	...	...	...	
Brackets, transporting bed, howitzer, R.M.L. — right	...	1	1	1	...	...	...	...	...	...	
Brackets, with bolts or screws — iron — comp. adjusting shaft	...	...	...	...	...	...	...	...	...	...	
Brackets, with bolts or screws — iron — gear compresssor screw	...	...	...	...	...	...	...	...	...	...	
Brackets, with bolts or screws — iron — hydraulic buffer	...	...	...	...	...	...	...	...	...	...	
Brackets, with bolts or screws — iron — stop, lever jamming	...	...	...	...	...	...	...	...	...	...	
Brackets, with bolts or screws — iron — link, adjusting, chain, left	...	...	...	...	...	...	...	...	...	...	
Brackets, with bolts or screws — iron — retaining right	...	...	...	...	...	...	...	...	...	...	
Brackets, with bolts or screws — iron — bearing shaft, eccentric, double	...	...	...	...	...	...	...	...	...	...	
Brackets, with bolts or screws — iron — clamp	...	...	...	...	...	...	...	...	...	...	
Brackets, with bolts or screws — metal — shaft, elevating — centre	...	...	...	...	...	...	...	...	...	...	
Brackets, with bolts or screws — metal — shaft, elevating — front	...	...	...	...	...	...	...	...	...	...	
Brackets, with bolts or screws — metal — shaft, elevating — rear	...	...	...	...	...	...	...	...	...	...	
Brackets, with bolts or screws — metal — spindle, worm, bottom	...	1	1	1	...	...	...	...	...	...	
Brackets, with bolts or screws — metal — elevating top	...	1	1	1	...	...	...	...	...	...	
Buffers — compressor lever, consisting of 1 elastic pad and plate, with bracket	...	...	...	...	...	...	...	...	...	...	
Buffers — hydraulic	...	...	...	...	...	...	...	...	...	...	
Capsquares, iron	2	2	2	2	2	...	...	...	...	...	
Carriages, body	...	...	...	...	1	1	1	1	1	1	
Chains, iron — drag, shoe	...	...	...	...	...	...	...	...	...	...	
Chains, iron — supporting hydraulic buffer	...	...	...	...	...	...	...	...	...	...	
Chains, iron — keep, with shakle, collar, pin and split key	...	...	...	...	...	...	...	...	...	...	

Where articles are interchangeable with others on the same line for

Digitized by Google

Component and Spare Parts for—*continued.*

| Carriages. | | |

Beds and Carriages for Medium Ordnance,

Component and spare parts.	Beds.				Carriages. Garrison, Wood.						
		Howitzer, R.M.L.			R.B.L.	R.M.L.			S.B.		
	Mortar, naval, with octagonal deck, 13-in., 100 cwt.	Iron, 8-in.	Steel. 6·3-in.	Steel. 6·3-in.	No. 18, converted naval, 7-in., 72 cwt.	Nos. 15 to 17, 7-in. Nos. 19 to 20, 40-pr.	Nos. 21, 22, 80-pr., 68-pr.	S.B.	No. 23, 71 cwt., and S.B. 8-in., 65 cwt. No. 24, 78 cwt., and S.B. 32-pr., 58 cwt. No. 25, 58 cwt.	68-pr., 112 cwt., 8-in., 54 cwt. 32-pr., 63 cwt., 50 cwt., 24 and 18-pr.	Howitzer, 10 and 8-in.
Clips, transom, transporting bed, howitzer, R.M.L.	...	1	1	1	...	...	...	...		...	...
Cocks, hydraulic buffer	...	...	...	...	...	...	...	...		...	...
Coins, wood — carriage, No. 5	...	...	...	...	...	1	1	1		1	1
Coins, wood — elevating	1	...	...	...	...	...	...	...		...	...
Coins, wood — hand No. 4	...	...	...	...	1	1	1	1		1	1
Coins, wood — hand No. 7	...	...	...	...	...	...	...	...		...	...
Coins, wood — housing	1	...	...	...	...	...	...	...		...	...
Compressors, iron side plates, with screws, bolts and nuts, 1 left and 1 right ... set	...		...	...	1	...	...	...		...	...
Cotters, steel, with split key, securing trunnion plates	...	...	...	...	...	...	...	...		...	...
Cranks, iron, rear roller, with split key ... ... — left ...	...	...	...	...	1	...	...	...		...	...
Cranks, iron, rear roller, with split key ... ... — right	...	...	...	...	1	...	...	...		...	...
Cylinders — wood, supporting radial arm ...	...	...	...	...	...	...	...	...		...	...
Cylinders — with ram, hydro-pneumatic ...	...	...	...	...	...	...	...	...		...	...
Decks, wood, octagonal	1	...	...	...	...	...	...	...		...	...
Derricks, iron, loading	1	...	...	...	...	...	...	...		...	...
Eye pins, iron, securing guard, worm wheel	...	1	1	1	...	...	...	...		...	...
Flauges, roller — metal, rear ... — left ...	...	...	...	...	...	...	...	...		...	...
Flauges, roller — metal, rear ... — right	...	...	...	...	...	...	...	...		...	...
Flauges, roller — steel ... ... — front	...	...	...	...	...	...	...	...		...	...
Flauges, roller — steel ... ... — rear ...	...	...	...	...	...	...	...	...		...	...
Flauges, roller — iron, front ... — left ...	...	...	...	...	...	...	...	...		...	...
Flauges, roller — iron, front ... — right	...	...	...	...	...	...	...	...		...	...
Guides — metal — arc, elevating	...	...	...	...	...	...	...	...		...	...
Guides — metal — rack, elevating — left ...	...	...	...	...	...	...	...	...		...	...
Guides — metal — rack, elevating — right	...	...	...	...	...	...	...	...		...	...
Guides — iron, bar directing ... — left ...	...	1	1	1	...	...	...	...		...	...
Guides — iron, bar directing ... — right	...	1	1	1	...	...	...	...		...	...
Guards — iron — chain, retaining	...	...	...	...	...	...	...	...		...	...
Guards — iron — windlass, hauling down	...	...	...	...	...	...	...	...		...	...
Guards — leather...	2	...	...	...	...	...	...	...		...	...
Handles, iron — screw elevating ratchet head	...	...	...	...	1	1	1	1		1	...
Handles, iron — starting	...	...	...	...	...	...	...	...		...	...

Where articles are interchangeable with others on the same line for

Digitized by Google

Component and Spare Parts for—*continued.*

| Carriages. | | |

Beds and Carriages for Medium Ordnance,

Component and spare parts.	Beds.				Carriages. Garrison,							
					Wood.							
		Howitzer, R.M.L.			R.B.L.	R.M.L.			S.B.			
			Steel.									
	Mortar, naval, with octagonal deck, 13-in., 100 cwt.	Iron, 8-in.	6·6-in.	6·3-in.	No. 18, converted naval, 7-in., 72 cwt.	Nos. 15 to 17, 7-in. Nos. 19 to 20, 40-pr.	Nos. 21, 22, 80-pr., S.B. 68-pr.	No. 23, 71 cwt., and S.B. 8-in., 65 cwt. No. 24, 58 cwt., and S.B. 32-pr., 58 cwt. No. 25, 58 cwt.	68-pr., 11½cwt., 8-in., 54cwt. 32-pr., 63 cwt., 50 cwt., 24 and 18-pr.	Howitzer, 10 and 8-in.		
Hooks, iron { drag chain	...	...	...	...	...	...	...	...	...	...		
{ drag shoe	...	...	...	...	...	...	...	...	...	...		
Indicators, pressure spring, with leather case	...	...	...	...	...	...	...	...	...	...		
Joints, iron, rocking levers	...	...	...	...	...	...	...	...	...	...		
Keys, capsquare, with chains — iron — No. 10	4	...	...	...	...	...	...	...	...	...		
,, 88	...	...	...	...	...	...	...	...	...	...		
,, 90 left	...	...	...	...	...	...	...	...	...	...		
,, 91 right	...	...	...	...	...	...	...	...	...	...		
,, 92	...	...	...	...	...	...	...	...	...	...		
,, 93	...	...	...	...	...	...	...	...	...	...		
,, 99	...	...	...	...	...	...	...	...	...	...		
,, 97 left	...	...	...	...	...	...	...	...	...	...		
,, 98 right	...	...	...	...	...	...	...	...	...	...		
,, 180	...	...	...	...	4	...	...	...	...	...		
,, 94 left	...	...	...	...	...	...	...	...	...	...		
,, 95 right	...	...	...	...	...	...	...	...	...	...		
steel — No. 1	...	4	...	...	...	...	...	...	...	...		
,, 2	...	...	4	4	...	...	...	...	...	...		
,, 215 left	...	...	...	...	...	...	...	...	...	...		
,, 216 right	...	...	...	...	...	...	...	...	...	...		
,, 224	...	...	...	...	...	...	...	...	...	...		
,, 225 left	...	...	...	...	...	...	...	...	...	...		
,, 226 right	...	...	...	...	...	...	...	...	...	...		
Keys, coin, with chains	2	...	...	...	...	...	...	...	...	...		
securing guard, worm wheel	...	1	1	1	...	...	...	...	...	...		
split axles, roller, so fitted	...	...	...	...	...	...	...	...	...	...		
pin, directing bar, transporting bed, howitzer, R.M.L.	...	1	1	1	...	...	...	...	...	...		
Lashings, tarred — 2 inch 18 feet	...	...	...	...	...	...	...	...	...	...		
1¼ ,, 64 ,,	...	1	1	1	...	...	...	...	...	...		
1¼ ,, 50 ,,	...	2	3	3	...	...	...	...	...	...		
1¼ ,, 22 ,,	...	1	...	...	...	...	...	...	...	...		
Levers { traversing	...	1	...	...	...	...	...	...	...	...		
{ windlass, hauling down	...	...	...	...	...	...	...	...	...	...		
Limbers, transporting bed, howitzer, R.M.L.	...	1	1	1	...	...	...	...	...	...		

Where articles are interchangeable with others on the same line for

Digitized by Google

Component and Spare Parts for—*continued.*

| Carriages. | | |

Beds and Carriages for Medium Ordnance,

Component and spare parts.	Beds.				Carriages. Garrison.							
					Wood.							
					R.B.L.		R.M.L.				S.B.	
	Mortar, naval, with octagonal deck, 13-in., 100 cwt.	Howitzer, R.M.L. Iron, 8-in.	Howitzer, R.M.L. Steel. 6·6-in.	Howitzer, R.M.L. Steel. 6·3-in.	No. 18, converted naval, 7-in., 72 cwt.	Nos. 15 to 17, 7-in. Nos. 19 to 20, 40-pr.	Nos. 21, 22, 80-pr., S.B. 68-pr.	No. 23, 71 cwt., and S.B. 8-in., 65 cwt.	No. 24, 58 cwt., and S.B. 32-pr., 58 cwt.	No. 25, 58 cwt.	68-pr., 112 cwt., 8-in., 54 cwt., 32-pr., 63 cwt., 50 cwt., 24 and 18-pr.	Howitzer, 10 and 8-in.
Links, adjusting, chain, retaining, with 3 india rubber and 2 iron rings, shackle, nut, pin, key and chain	...	...	...	...	...	...	...	...	...	...	...	...
Loops, iron — common, with nuts ... side	...	4	4	4	...	...	...	...	...	...	...	...
Loops, iron — common, with nuts ... transom	...	1	1	1	...	...	...	...	...	...	...	...
Loops, iron — with plate, securing, piston, hydraulic buffer	...	...	...	...	...	...	...	...	...	...	...	...
Loops, iron — rope, guide, rammer, with bolts ...	...	...	...	...	...	...	2	2	2	...	...	...
Nuts, metal, screw ... elevating	...	...	...	...	1	1	1	...	1	...	1	1
Nuts, metal, screw ... ,, with pinion ...	...	...	...	...	...	...	...	...	...	...	...	...
Packings, cylinder, leather (12 per set) set	...	...	...	...	...	...	...	...	...	...	...	...
Pads, elastic pieces, buffer	...	...	...	...	...	...	...	...	...	...	...	...
Pawls, windlass, iron, hauling down ...	...	...	...	...	...	...	...	...	...	...	...	...
Pins — bar connecting piston rod ...	...	...	...	...	...	...	...	...	...	...	...	...
Pins — iron — bed, with chain ...	...	...	...	...	...	1	1	...	1	...	1	...
Pins — iron — bed, with split key...	...	...	...	...	...	...	...	...	...	...	...	1
Pins — iron — preventor rope...	...	...	...	...	...	1	1	...	1	...	1	1
Pins — iron — sheave, with nut and split key	...	...	...	...	...	...	...	...	...	...	...	...
Pins — directing bar, transporting bed, howitzer, R.M.L.	...	1	1	1	...	...	...	...	...	...	...	...
Pins — linch, 1st class	...	...	...	...	...	...	...	...	...	...	...	...
Pins — windlass, with split key	...	...	...	...	...	...	...	...	...	...	...	...
Pintails, iron, with metal nut and washers	1	...	...	...	...	...	...	...	...	...	...	...
Plates — clip with bolts — front or rear pairs	...	...	...	...	...	...	...	...	...	...	...	...
Plates — clip with bolts — front pairs	...	...	...	...	...	...	...	...	...	...	...	...
Plates — clip with bolts — rear pairs	...	...	...	...	...	...	...	...	...	...	...	...
Plates — ground	...	...	...	...	...	...	...	...	...	...	...	...
Plates — iron — rear roller — drop ...	...	...	...	...	...	...	...	...	...	...	...	...
Plates — iron — rear roller — plain	...	...	...	...	...	...	...	...	...	...	...	...
Plates — iron — rear roller — with stop — left	...	...	...	...	...	...	...	...	...	...	...	...
Plates — iron — rear roller — with stop — right	...	...	...	...	...	...	...	...	...	...	...	...
Plates — metal, trunnion	...	...	...	...	...	...	...	...	...	...	...	...
Plates — steel ,, ...	...	...	...	...	...	...	...	...	...	...	...	...
Plugs — filling hole, hydraulic buffer — No. 20	...	...	...	...	...	...	...	...	...	...	...	...
Plugs — filling hole, hydraulic buffer — ,, 22	...	...	...	...	...	...	...	...	...	...	...	...
Plugs — filling hole, hydraulic buffer — ,, 40	...	...	...	...	...	...	...	...	...	...	...	...
Plugs — wood	1	...	...	...	...	...	...	...	...	...	...	...
Racks, steel, with bolts, running in and out	...	...	...	...	...	...	...	...	...	...	...	...

Where articles are interchangeable with others on the same line for

Digitized by Google

Component and Spare Parts for—*continued.*

Carriages.																										Proportions of spare for each		
Sliding.															Siege.													
Iron.															Iron with limber.													
R.B.L.					R.M.L.										Howitzer R.M.L.													
7-inch.					64-pr.										8-in.													
No. 1, 4 ft. 3 in., 3 ft. 6 in. or 2 ft. 7 in. parapet.	for wood platform				71 cwt., for wood platfm.		64 cwt.																					
	No. 3, 3 ft. 6 in. parapet.	No. 2, 4 ft. 3 in. or 3 ft. 6 in. parapet.	No. 4, 40-pr.	No. 5, 20-pr.	No. 10, 4 ft. 3 in. or 3 ft. 6 in. parapet.	No. 11, 3 ft. 6 in parapet.	No. 12, 2 ft. 7 in. parapet.	No. 8, 6 ft. parapet.	No. 9, 5 ft. 6 in. parapet.	No. 13, 58 cwt. for wood platform, 4 ft. 3 in. or 3 ft. 6 in. parapet.	No. 14, 40 pr.	No. 6, S.B.B.L. 32-pr.	Gun, R.B.L. 40-pr.	6 ft. parapet.	70 cwt.	46 cwt.	6·6-in.	6·3-in.	6·6-in. gun.	Steel, with limber R.M.L.	Detached group of Sub-Districts, per 10 guns, howitzers or mortars, or less No. of each nature.	Sub-District, per 10 guns, howitzers or mortars, or less No. of each nature.	Fort or battery, per 10 guns, howitzers or mortars, or less No. of each nature.
...	...	...	...	...	...	...	...	...	...	...	...	...	...	...	...	...	...	...	2	...	...	...	...
4	4	4	...	...	4	4	2	4	4	4	...	4	...	...	...	...	...	...	...	...	...	...	...
...	...	...	...	...	...	...	...	...	...	...	...	...	...	...	2	2	2	2	...	...	...	...	...
...	...	...	...	...	2	...	...	...	...	...	...	...	...	...	...	...	...	...	...	...	...	...	...
...	1	1	...	...	1	...	...	...	...	1	...	1	...	1	...	...	...	...	...	...	...	...	...
...	...	...	...	...	...	...	...	...	...	...	...	...	...	...	...	...	...	...	1	...	...	...	1
1	1	...	...	...	...	...	...	...	...	...	...	...	...	...	...	...	...	...	2	...	...	1	...
...	...	...	...	...	...	...	...	...	...	...	...	...	...	...	2	2	2	2	...	...	...	...	1
...	...	...	...	...	...	...	...	...	...	...	...	...	...	...	...	...	...	...	...	...	...	...	1
...	...	...	...	...	...	...	...	...	...	...	...	...	...	...	...	...	...	...	1	...	...	...	1
...	...	...	...	...	...	...	...	...	...	...	...	...	...	...	...	...	...	...	...	...	...	...	...
...	...	...	4	4	...	...	...	...	...	...	...	...	...	...	2	2	2	2	2	1	...	...	...
...	...	...	...	...	...	...	...	...	...	...	...	...	...	...	...	...	...	...	1	...	...	...	...
1	...	1	...	...	1	1	1	1	1	1	1	...	...	...	...	...	...	...	3	...	...	...	...
...	1	...	...	...	...	1	...	1	...	...	...	...	...	...	...	...	...	...	...	...	...	...	...
4	...	...	...	...	...	...	...	...	...	...	...	...	...	...	...	...	...	...	...	...	...	...	...
2	...	...	...	...	...	...	...	...	...	...	...	...	...	...	...	...	...	...	...	...	...	...	...
1	1	1	...	...	1	1	1	...	1	1	...	...	...	...	...	...	...	...	...	...	...	...	...
1	1	1	...	...	1	1	1	...	1	1	...	...	...	...	...	...	...	...	...	...	...	...	...
2	2	2	2	2	2	2	2	2	2	2	2	...	...	...	...	...	...	...	2	...	...	...	...
...	...	...	1	1	...	...	...	...	...	...	...	...	...	...	...	...	...	...	...	...	...	1	1
...	...	...	...	...	...	...	...	...	...	...	...	1	...	...	...	...	...	...	...	...	...	1	1
...	...	...	...	...	...	...	...	...	...	...	...	...	...	...	1	1	1	1	...	...	...	1	1
...	...	...	...	...	...	...	...	1	...	...	...	...	...	...	...	...	...	...	...	...	...	...	...

which a supply of spare is laid down, they are shown in *italics.*

Digitized by Google

Beds and Carriages for Medium Ordnance,

Component and spare parts.	Beds.				Carriages. Garrison, Wood.						
		Howitzer, R.M.L.			R.B.L.		R.M.L.			S.B.	
			Steel.								
	Mortar, naval, with octagonal deck, 13-in., 100 cwt.	Iron, 8-in.	6·6-in.	6·3-in.	No. 18, converted naval, 7-in. 72 cwt.	Nos. 15 to 17, 7-in. Nos. 19 to 20, 40-pr.	Nos. 21, 22, 80-pr., S.B. 68-pr.	No. 23, 71 cwt., and S.B. 8-in. 65 cwt. No. 24, 58 cwt., and S.B. 32-pr. 58 cwt. No. 25, 58 cwt.	68-pr., 112 cwt., 8-in., 54 cwt. 32-pr., 63 cwt., 50 cwt., 24 and 18-pr.	Howitzer, 10 and 8-in.	
Rings, india-rubber — buffer, piston rod	...	...	...	...	...	...	...	...	...	...	
Rings, india-rubber — link, retaining chain, $2\frac{3}{4}$ in. by $\frac{1}{2}$ in., $\frac{3}{8}$ in. hole	...	...	...	...	...	...	...	...	...	...	
Rings, india-rubber — 11 in. by 3 in. by 6 in. hole	1	...	...	...	...	...	...	...	...	...	
Rings, india-rubber — 7 " " 3 " " 2 " "	20	...	...	...	...	...	...	...	...	...	
Rings, india-rubber — 7 " " $1\frac{1}{2}$ " " 3 " "	2	...	...	...	...	...	...	...	...	...	
Rollers, carriage — metal	..	6	6	6	...	...	...	...	...	...	
Rollers, carriage — metal — No. 31	...	...	...	...	$2\frac{1}{2}$	2	2	2	2	2	
Rollers, carriage — metal — " 84	...	...	...	...	$2\frac{5}{8}$	...	...	...	...	...	
Rollers, carriage — steel — No. 2	...	...	...	...	..	...	..	..	...	...	
Rollers, carriage — steel — " 3	...	...	...	...	...	...	..	..	...	...	
Rollers, carriage — steel — " 5	...	...	...	...	...	...	...	...	...	...	
Rollers, carriage — steel — " 4	...	...	...	...	...	...	...	...	...	...	
Rollers, wood — scotch	...	...	...	...	...	...	...	...	...	...	
Rollers, wood — shifting gun	...	...	...	...	...	...	...	...	...	...	
Ropes, hauling down, 5 in., 451 ft.	...	...	...	...	...	...	...	...	...	...	
Screws, iron, elevating	...	...	...	...	1	1	1	1	1	1	
Sheaves, metal — hauling down	...	...	...	...	...	...	...	...	...	...	
Sheaves, metal — preventor rope, with pin	...	...	...	...	2	.	...	...	...	...	
Shoes, drag, iron, 1st class	...	1	1	1	...	...	...	...	...	...	
Sockets, iron — lever	...	...	...	...	2	..	...	...	...	...	
Sockets, iron — priming iron with screws	...	1	1	1	...	...	...	...	...	...	
Springs, steel, recoil, valve	...	...	...	...	...	...	...	...	...	...	
Steps, wood — side	...	...	...	...	...	...	...	...	...	...	
Steps, wood — laying	...	...	...	...	...	...	...	...	...	...	
Spindles, iron — pawl, with collar and nut — left	...	...	...	...	...	...	...	...	...	...	
Spindles, iron — pawl, with collar and nut — right	...	...	...	...	...	...	...	...	...	...	
Spindles, iron — sleave, with cottar, collar, and split key — left	...	..	...	...	...	..	...	...	...	...	
Spindles, iron — sleave, with cottar, collar, and split key — right	...	..	...	...	...	...	...	...	...	...	
Spindles, iron — screw, elevating, with collar, nut, and split key	...	..	...	...	...	...	...	...	...	...	
Stays, iron, bar connecting, with nuts	..	..	...	...	...	...	..	...	...	...	
Stops, iron, with screws — bar supporting compressor plates	...	...	...	...	...	...	...	...	...	...	
Stops, iron, with screws — compressor plates	...	...	2	2	...	...	...	...	...	...	
Steps, iron, laying — with bolts	...	...	...	...	...	...	...	...	...	...	
Steps, iron, laying — " key	...	...	...	...	...	...	...	...	...	...	

Where articles are interchangeable with others on the same line for ‡ Front. § Rear.

Digitized by Google

Component and Spare Parts for—*continued.*

| Carriages. | | |

Beds and Carriages for Medium Ordnance,

Component and spare parts.	Beds.				Carriages. Garrison, Wood.						
	Mortar, naval, with octagonal deck, 13-in., 100 cwt.	Howitzer R.M.L. Iron, 8-in.	Howitzer R.M.L. Steel. 6·6-in.	Howitzer R.M.L. Steel. 6·3-in.	R.B.L. No. 18, converted naval, 7-in., 72 cwt.	R.B.L. Nos. 15 to 17, 7-in. Nos. 19 to 20, 40-pr.	R.M.L. Nos. 21, 22, 80-pr., S.B. 68-pr.	R.M.L. No. 23, 71 cwt., and S.B. 8-in., 65 cwt. No. 24, 58 cwt., and S.B. 32-pr., 58 cwt. No. 25, 58 cwt.	S.B. 68-pr., 112 cwt., 8-in., 54 cwt., 32-pr., 63 cwt., 50 cwt., 24 and 18-pr.	S.B. Howitzer, 10 and 8-in.
Straps, leather, securing...	...	...	...	...	...	...	...	...	...	...
Stops, iron, rack, { bottom	...	...	...	...	...	...	...	...	...	...
elevating { top	...	...	...	...	...	...	...	...	...	...
Washers { iron, drag, 1st class B. ...	...	...	...	...	...	...	...	...	...	...
Washers { leather, plug, filling ...	...	...	...	...	...	...	...	...	...	...
Wheels { iron, hand, elevating ...	...	...	...	...	...	...	...	...	...	...
Wheels { 1st class B. { No. 5 (6 ft) ...	...	...	...	...	...	...	...	...	...	...
Wheels { 1st class B. { ,, 6 (5 ft.) ...	...	2	2	2	...	...	...	...	...	...
Wheels { 1st class B. { ,, 7 (5 ft.) ...	...	...	...	...	...	...	...	...	...	...
Windlasses, hauling down	...	...	...	...	...	...	...	...	...	...
BARS, DIRECTING.										
Bars, iron, compressor	...	4	4	4	...	...	...	...	...	...
Bodies, bar, directing	...	1	1	1	...	...	...	...	...	...
Buffers, consisting of { 2 elastic pads, 2 plates, with bolts and nuts, front	...	1	1	1	...	...	...	...	...	...
Buffers, consisting of { 3 elastic pads, 3 plates, with bolts and nuts, rear	...	1	1	1	...	...	...	...	...	...
Flaps, metal	...	1	1	1	...	...	...	...	...	...
Pads, elastic. { front {	..	2	...	...	...	...	...	...	...	...
Pads, elastic. { front {	...	...	2	2	...	...	...	...	...	...
Pads, elastic pieces, buffer { rear {	...	3	...	...	...	...	...	...	...	...
Pads, elastic pieces, buffer { rear {	...	.	3	3	...	...	...	...	...	...
Pins { steel, flap, with lanyard	...	1	1	1	...	...	...	...	...	...
Pins { iron, compressor bar, with collar and split keys	...	2	2	2	...	...	...	...	...	...
Rings, india rubber, 4 in. by ½ in., 2 in. hole	...	6	6	6	...	...	...	...	...	...

57
Gen. No.
4256

Where articles are interchangeable with others on the same line fo

Digitized by Google

Component, and Spare Parts for—*continued.*

| Carriages. | | |

Beds and Carriages for Medium Ordnance,

Component and spare parts.	Beds.				Carriages. Garrison, Wood.						
		Howitzer, R.M.L.			R.B.L.		R.M.L.			S.B.	
	Mortar, naval, with octagonal deck, 13-in., 100 cwt.	Iron, 8-in.	Steel. 6·6-in.	Steel. 6·3-in.	No. 18, converted naval, 7-in. 72 cwt.	Nos. 15 to 17, 7-in.	Nos. 19 to 20, 40-pr.	Nos. 21, 22, 80-pr., S.B. 64-pr.	No 23, 71 cwt., and S.B. 8-in. 65 cwt.	No. 24, 58 cwt., and S.B. 32-pr. 58 cwt.	No. 25, 58 cwt.	64-pr., 112 cwt., 8-in., 54 cwt.	32-pr., 63 cwt., 50 cwt., 24 and 18-pr.	Howitzer, 10 and 8-in.
Gear, Compressor.														
Cramps, iron	...	1	1	1	...	...	...	...				...	...	...
Levers { iron { adjusting, with chain and key	...	1	1	1	...	...	...	...				...	...	...
iron { rocking { adjusting	...	...	...	...	...	...	...	...				...	...	...
rocking { compressor ...	...	...	...	...	...	...	...	...				...	...	...
steel, compressor	...	1	1	1	...	.	...	...				...	...	...
Nuts, metal { adjusting, with 3 feathers ...	...	...	...	...	...	.	...	...				...	...	...
metal { compressor	...	...	...	...	...	...	...	...				...	...	...
Pins, iron, rocking lever, with split key	...	...	...	...	...	...	...	...				...	...	...
Plates, iron, compressor...	...	6	6	6	...	...	...	...				...	...	...
Screws, iron { adjusting, with collar and key ...	...	1	1	1	...	...	...	...				...	...	...
iron { compressor, with { and nut ...	...	1	1	1	...	...	...	...				...	...	...
iron { collar { key and nut...	...	...	...	...	...	...	...	...				...	...	...
Shafts, iron, adjusting, with collar, key and nut	...	...	...	...	...	...	...	...				...	...	...
Gear, Elevating.														
Arcs, elevating, iron { right	...	1	...	...	...	...	...	...				...	...	...
	...	...	1	...	...	...	...	...				...	...	...
	...	.	...	1	...	...	...	...				...	...	...
	...	...	...	...

Component and Spare Parts for—*continued.*

| Carriages. | | |

Beds and Carriages for Medium Ordnance,

Component and spare parts.	Beds.				Carriages. Garrison, Wood.							
		Howitzer, R.M.L.			R.B.L.		R.M.L.			S.B.		
			steel.									
	Mortar, naval, with octagonal deck, 13-in., 100 cwt.	Iron, 8-in.	6·6-in.	6·3-in.	No. 18, converted naval, 7-in., 72 cwt.	Nos. 15 to 17, 7-in. Nos. 19 to 20, 40-pr.	Nos. 21, 22, 80-pr., S.B. 68-pr.	No. 23, 71 cwt., and S.B. 8-in., 65 cwt.	No. 24, 58 cwt., and S.B. 32-pr., 58 cwt. No. 25, 53 cwt.	68-pr., 112 cwt., 8-in., 54 cwt. 32-pr., 65 cwt., 50 cwt., 24 and 18-pr.	Howitzer, 10 and 8-in.	
Brakes plates, friction steel pair	...	...	...	...	...	...	...	...	...	...	...	
Brakes plates, friction metal „	...	...	...	...	...	...	...	...	...	...	...	
Brakes screw, iron, jamming with split key	...	...	...	...	...	...	...	...	...	...	...	
Brakes handle, iron	...	...	...	...	...	...	...	...	...	...	...	
Capstan heads, iron, with feathers ...	...	...	...	...	...	...	...	...	...	...	...	
Clamps, iron left	...	...	...	...	...	...	...	...	...	...	...	
Clamps, iron right	...	...	...	...	...	...	...	...	...	...	...	
Discs, metal, ratchet, spindle, worm ..	...	...	...	...	...	...	...	...	...	...	...	
Guards metal, wheel worm ...	...	1	1	1	...	...	...	...	...	...	...	
Guards metal, wheel spur ...	...	...	...	...	...	...	...	...	...	...	...	
Guards iron, mitre wheel	...	...	...	...	...	...	...	...	...	...	...	
Levers, jamming left	...	...	...	...	...	...	...	...	...	...	...	
Levers, jamming right	...	...	...	...	...	...	...	...	...	...	...	
Levers, iron spindle, worm, with collar and screws	...	...	...	...	...	...	...	...	...	...	...	
Plinths, elevating metal	...	...	...	...	...	...	...	...	...	...	...	
Plinths, elevating bevel	...	...	...	...	...	...	...	...	...	...	...	
Plinths, elevating steel, left	...	...	...	...	...	...	...	...	...	...	...	
Plinths, elevating steel, right	...	...	...	...	...	...	...	...	...	...	...	
Plinths, elevating steel, 2nd motion ...	...	1	...	...	...	...	...	...	...	...	...	
Plinths, elevating steel, collars and nuts	...	...	...	...	...	...	...	...	...	...	...	
Plinths, elevating steel, with spindles	...	...	...	...	...	...	...	...	...	...	...	
Plinths, elevating steel, collars and nuts, 1st motion	...	...	1	1	...	...	...	...	...	...	...	
Plinths, elevating steel, collars and nuts, 2nd „	...	...	...	...	...	...	...	...	...	...	...	
Plinths, elevating steel, collars, nut and pin, 1st motion	...	...	...	...	...	...	...	...	...	...	...	
Plinths, elevating steel, collars, nut and screw, 2nd motion	...	...	...	...	...	...	...	...	...	...	...	

Where articles are interchangeable with others on the same line for

Digitized by Google

Component and Spare Parts for—*continued.*

| Carriages. | | |

Beds and Carriages for Medium Ordnance,

Component and spare parts.	Beds.				Carriages. Garrison, Wood.							
		Howitzer, R.M.L.			R.B.L.		R.M.L.			S.B.		
	Mortar, naval, with octagonal deck, 13-in., 100 cwt.	Iron, 8-in.	Steel. 6'6-in.	Steel. 6'3.in.	No. 18, converted naval, 7-in., 72 cwt.	Nos. 15 to 17, 7-in. Nos. 19 to 20, 40-pr.	Nos. 21, 22, 80-pr., S.B. 68-pr.	No. 23, 71 cwt., and S.B. 8-in., 65 cwt.	No. 24, 58 cwt., and S.B. 32-pr., 58 cwt.	No. 25, 58 cwt.	68-pr., 112 cwt., 8-in., 54 cwt. 32-pr., 63 cwt., 24 and 18-pr.	Howitzer, 10 and 8-in.
Pinions, elevating — steel, with spindles, and collars ... ... — and nuts, 2nd and 3rd motion	...	...	...	2	...	...	...	...	...	...	...	...
Pinions, elevating — bevel, iron	...	...	...	...	...	...	...	...	...	...	...	...
Pointers, steel, arc, elevating	...	...	...	...	...	...	...	...	...	...	...	...
Racks, iron, elevating, with collar and screws — left ...	...	...	...	...	...	...	...	...	...	...	...	...
Racks, iron, elevating, with collar and screws — right ...	...	...	...	...	...	...	...	...	...	...	...	...
Rollers, metal, friction, with spindle — nut and steel pin	...	...	...	...	...	...	...	...	...	...	...	...
Rollers, metal, friction, with spindle — collar, nut, and split key	...	2	2	1	...	...	...	...	...	...	...	...
Rods, iron, elevating	...	...	...	...	...	...	...	...	...	...	...	...
Screws, metal, lubricating holes	...	2	2	2	...	...	...	...	...	...	...	...
Shafts, iron — cross worm wheel, with collar and nuts	...	.	...	...	...	...	...	...	...	...	...	...
Shafts, iron — elevating, with collars and nuts ...	...	...	...	...	...	...	...	...	...	...	...	...
Spindles, iron — mitre wheel	...	...	...	...	...	...	...	...	...	...	...	...
Spindles, iron — worm, with collars and nuts ...	...	1	1	1	...	...	...	...	...	...	...	...
Studs, bearing, worm spindle	...	3	2	2	...	...	...	...	...	...	...	...
Tubes, metal, lubricating	...	1	1	1	...	...	...	...	...	...	...	...
Wheels — metal — hand, elevating ...	...	1	1	1	...	...	...	...	...	...	...	...
Wheels — metal — bevel	...	...	...	...	...	...	...	...	...	...	...	...
Wheels — metal — mitre	...	...	...	...	...	...	...	...	...	...	...	...
Wheels — metal — worm, with friction, cone, and feathers	...	1	1	1	...	...	...	...	...	...	...	...
Wheels — iron — hand, elevating ...	...	...	...	...	...	...	...	...	...	...	...	...
Wheels — iron — spur, 2nd motion...	...	...	...	...	...	...	...	...	...	...	...	...
Wheels — iron — spur	...	...	...	...	...	...	...	...	...	...	...	...
GEAR, RUNNING UP.												
Axles, iron, roller, front, with split key ...	...	...	...	...	...	...	...	...	...	...	...	...
Rollers, metal carriage — front — No. 29 ...	...	...	...	...	...	...	...	...	...	...	...	...
Rollers, metal carriage — front — ,, 32 ...	...	...	...	...	...	...	...	...	...	...	...	...
Rollers, metal carriage — rear — No. 71 ...	...	...	...	...	...	...	...	...	...	...	...	...
Rollers, metal carriage — rear — ,, 73 ...	...	...	...	...	...	...	...	...	...	...	...	...
Rollers, metal carriage — rear — ,, 95 ...	...	...	...	...	...	...	...	...	...	...	...	...

Where articles are interchangeable with others on the same line for

Digitized by Google

Component and Spare Parts for—*continued.*

| Carriages. | | |

Beds and Carriages for Medium Ordnance,

Component and spare parts.	Beds.				Carriages. Garrison, Wood.							
	Mortar, naval, with octagonal deck, 13-in., 100 cwt.	Howitzer, R.M.L. Iron, 8-in.	Howitzer, R.M.L. Steel. 6·6-in.	Howitzer, R.M.L. Steel. 6·3-in.	R.B.L. No. 18, converted naval, 7-in. 72 cwt.	R.B.L. Nos. 15 to 17, 7-in. Nos. 19 to 20, 40-pr.	R.M.L. Nos. 21, 22, 80-pr., S.B. 65-pr.	R.M.L. No. 23, 71 cwt., and S.B. 8-in. 65 cwt.	R.M.L. No. 24, 58 cwt., and S.B. 32-pr. 58 cwt.	R.M.L. No. 25, 58 cwt.	S.B. 63-pr., 112 cwt., 8-in., 54 cwt.	S.B. 32-pr., 63 cwt., 50 cwt., 24 and 18-pr.	S.B. Howitzers, 10 and 8-in.
Shafts, iron	eccentric, double, with split keys	...	...	...	...	...	...	...	...	...	...	...	...
	eccentric, double	..	...	...	...	...	...	...	...	...	...	...	...
Sockets, iron, lever, with pawl, pin, and split key	left, No. 1	...	...	...	...	...	...	...	...	...	...	...	...
	right, No. 2	...	...	...	...	...	...	...	...	...	...	...	...
LIMBER, IRON SIEGE.													
Boxes	tin, grease, half round 3 lbs.	...	...	...	...	...	...	...	...	...	...	...	...
	wood, ammunition, near	...	...	...	...	...	...	...	...	...	...	...	...
	wood, ammunition, off	...	...	...	...	...	...	...	...	...	...	...	...
	wood, centre	...	...	...	...	...	...	...	...	...	...	...	...
	wood, siege	...	...	...	...	...	...	...	...	...	...	...	...
Cans, tin	glycerine, 1 gallon	...	...	...	...	...	...	...	...	...	...	...	...
	oil, lubricating, 1 pint ...	...	...	...	...	...	...	...	...	...	...	...	...
	oil, lubricating, No. 3 ...	...	...	...	...	...	...	...	...	...	...	...	...
	oil, 2 gallons §	...	...	...	...	...	...	...	...	...	...	...	...
Lashings, tarred, 1 in., 10 ft. ...		...	...	...	...	...	...	...	...	...	...	...	...
Limbers, body, iron		...	...	...	...	...	...	...	...	...	...	...	...
Pins	steel, linch, 2nd class	...	...	...	...	...	...	...	...	...	...	...	...
	iron, shaft, with key and chain, near, No. 1 shaft	...	...	...	...	...	...	...	...	...	...	...	...
	iron, shaft, with key and chain, framed, No. 16 shaft	...	...	...	...	...	...	...	...	...	...	...	...
Shafts, wood	No. 1 (near)	...	...	...	...	...	...	...	...	...	H	...	...
	,, 20 (off) (2nd class C.)	...	...	...	...	...	...	...	...	...	...	...	...
	,, 16 (framed) pairs	...	...	...	...	...	...	...	...	...	...	...	...
Stays, iron, outrigger		...	...	...	...	...	...	...	...	...	...	...	...
Straps, leather, securing... ...		...	...	...	...	...	...	...	...	...	...	...	...
Washers, iron, loop, 2nd class C. ...		...	...	...	...	...	...	...	...	...	...	...	...
Wheels, 2nd class B, 5 ft., No. 25 ...		...	...	...	...	...	...	...	...	...	...	...	...

38407 Equip 1616

Where articles are interchangeable with other on the same line for

Digitized by Google

Component and Spare Parts for—*continued.*

Carriages.																						Proportions of spare for each		
Sliding.															Siege.									
Iron.															Iron, with limber.									
R.B.L.						R.M.L.									Howitzer R.M.L.									
7-inch.						64-pr.									8-in.									
No. 1, 4 ft. 3 in., 3 ft. 6 in. or 2 ft. 7 in. parapet.	for wood platform		No. 4, 40-pr.	No. 5, 20-pr.		71 cwt., for wood platfm.		64 cwt.				No. 6, S.B.B.L. 32-pr.	No. 14, 40-pr.		Gun, R.B.L. 40-pr., 6 ft. parapet.	70 cwt.	46 cwt.	6·6-in.	6·3-in.	Steel, with limber, R.M.L. 6·6-in. gun.				
	No. 3, 3 ft. 6 in. parapet.	No. 2, 4 ft. 3 in. or 3 ft. 6 in. parapet.			No. 10, 4 ft. 3 in. or 3 ft. 6 in. parapet.	No. 11, 3 ft. 6 in. parapet.	No. 12, 2 ft. 7 in. parapet.	No. 8, 6 ft. parapet.	No. 9, 5 ft. 6 in. parapet.	No. 13, 58 cwt. for wood platform, 4 ft. 3 in. or 3 ft. 6 in. parapet.											Detached group of Sub-Districts, per 10 guns, howitzers or mortars, or less No. of each nature.	Sub-District, per 10 guns, howitzers or mortars, or less No. of each nature.	Fort or battery, per 10 guns, howitzers or mortars, or less No. of each nature.
1	1	1	...	...	1	1	1	...	1	1	...	...	...		...	...	...	...	...	...		...	...	...
...	...	...	...	...	...	...	...	...	...	...	1	...	...		...	...	...	...	...	...		...	...	...
1	*1*	*1*	...	...	*1*	*1*	*1*	...	*1*	*1*	...	...	...		...	...	...	...	...	...		...	...	1
1	*1*	*1*	...	...	*1*	*1*	*1*	...	*1*	*1*	...	...	...		...	...	...	...	...	...		...	...	1
...	...	...	...	...	...	...	...	...	...	...	...	...	1†		1	1	1	1	1		...	...	...	
...	...	...	...	...	...	...	...	...	...	...	...	...	1		...	...	...	...	...		...	...	...	
...	...	...	...	...	...	...	...	...	...	...	...	...	1		...	...	...	...	...		...	...	...	
...	...	...	...	...	...	...	...	...	...	...	...	...	1		1	1	1	1	1		...	...	...	
...	...	...	...	...	...	...	...	...	...	...	...	...	...		...	...	...	...	1		...	...	...	
...	...	...	...	...	...	...	...	...	...	...	...	...	...		1	1	1	1	...		...	...	...	
...	...	...	...	...	...	...	...	...	...	...	...	...	1		1	1	1	1	1		...	...	...	
...	...	...	...	...	...	...	...	...	...	...	...	...	...		...	1	1	1	...		...	...	...	
...	...	...	...	...	...	...	...	...	...	...	...	...	1		1	1	1	1	1		...	...	...	
...	...	...	...	...	...	...	...	...	...	...	...	...	1		1	1	1	1	1		...	...	...	
...	...	...	...	...	...	...	...	...	...	...	...	...	2		2	2	2	2	2		1	...	...	
...	...	...	...	...	...	...	...	...	...	...	...	...	*1*		*1*	*1*	*1*	*1*	*1*		1	...	...	
...	...	...	...	...	...	...	...	...	...	...	...	...	*1*		*1*	*1*	*1*	*1*	*1*		1	...	...	
...	...	...	...	...	...	...	...	...	...	...	...	...	1		1	1	1	1	1		...	...	...	
...	...	...	...	...	...	...	...	...	...	...	...	...	1		1	1	1	1	1		...	...	...	
...	...	...	...	...	...	...	...	...	...	...	...	...	1		1	1	1	1	1		...	...	...	
...	...	...	...	...	...	...	...	...	...	...	...	...	2		2	2	2	2	2		...	...	...	
...	...	...	...	...	...	...	...	...	...	...	...	...	47		32	33	33	33	33		...	...	...	1 48″ × 1″ and one 30 × 1″
...	...	...	...	...	...	...	...	...	...	...	...	...	1		1	1	1	1	1		...	...	...	...
...	...	...	...	...	...	...	...	...	...	...	...	...	2		2	2	2	2	2		...	...	...	...

which a supply of spare is laid down, they are shown in *italics*.
† One limber to every 3 guns or less. ‡ No 5, if for siege train.
§ For siege train only.

Digitized by Google

MONCRIEFF WROUGHT-IRON GARRISON CARRIAGES, COMPONENT AND SPARE PARTS FOR.

Component and spare parts.	R.B.L., 7-in.	R.M.L. 9-in. (Mark II.)	R.M.L. 7-in. (Mark I.)	R.M.L. 7-in. (Mark II.)	R.M.L. 6·4-pr., 58 cwt.	Proportions of spare for each: Detached group of Sub-Districts. per 10 guns, or less No. of each nature.	Proportions of spare for each: Sub-District. per 10 guns, or less No. of each nature.	Proportions of spare for each: Fort or Battery. per 10 guns, or less No. of each nature.
CARRIAGES.								
Bearings, metal ... cylindrical, trunnion	2	2	...	2	2			
with screws, elevating	...	...	2	...	..			
shaft ... connecting	...	...	2	...	...			
Brackets, metal, with bolts or screws — shaft, elevating	...	...	1	...	...			
spindle — centre	...	...	1	...	...			
worm — front	...	...	1	...	...			
worm — rear	...	...	1	...	...			
Cap squares — cast-iron ... left...	...	...	...	...	1			
cast-iron ... right	...	...	...	...	1			
wrought-iron left...	1	1	1	1	...			
wrought-iron right	1	1	1	1	...			
Carriages, body, iron ... without fittings	...	...	1	...	...			
without fittings, with counter-weight ...	1	1	...	1	1			
Collars, iron, axle, with screws	...	...	2	...	...			
Guides, iron, arc, elevating ...	...	...	2	...	...			
Loops, iron, lifting, counterweight	...	4	...	2	...			
Rollers, iron	...	...	2	...	...			
Screws, iron — cap square	4	4	4	4	4			
Screws, iron — preserving	...	8	...	6	...			
Stages, laying	...	...	1	...	...			
Steps, side — left...	...	...	1	...	...			
Steps, side — right	...	...	1	...	...			
ELEVATORS.								
Elevators, body, iron, without fittings, with counterweight	...	...	1	...	...			
Guards, iron, turning, stage-loading	...	...	2	...	...			
Guides, iron, shot	...	...	1	...	...			
Screws, iron, securing, loop-washer	...	...	2	...	...			
Shafts iron, connecting	...	...	1	...	...			
Washers, iron, loop, connecting shaft	...	...	2	...	...			

Digitized by Google

Moncrieff Wrought-Iron Garrison Carriages, Component and Spare Parts for—*continued.*

Component and spare parts.	R.B.L., 7-in.	R.M.L. 9-in. (Mark II.)	R.M.L. 7-in. (Mark I.)	R.M.L. 7-in. (Mark II.)	R.M.L. 64-pr., 58 cwt.	Proportions of spare for each: Detached group of Sub-Districts, per 10 guns, or less No. of each nature.	Sub-District, per 10 guns, or less No. of each nature.	Fort or Battery, per 10 guns, or less No. of each nature.
SLIDES.								
Axles, truck — steel ... bevel wheel	...	...	2	...	...	1		
steel ... with nuts, plain	...	...	2	...	...	1		
iron, with — collars and nuts — bevel wheel	...	2	...	...	...	1		
iron, with — collars and nuts — plain	...	4	...	...	...	1		
iron, with — collars and pins — bevel wheel	...	...	...	2	...	1		
iron, with — collars and pins — plain	...	...	...	2	...	1		
iron, with — collars and pins — plain — front	...	...	...	...	2	1		
iron, with — collars and pins — plain — rear	...	...	...	...	1	1		
iron, with — nuts ... bevel wheel	2	...	...	...	..	1		
iron, with — nuts ... plain	2	...	...	...	...	1		
Bearings, metal, with bolts or screws ... flanges, for trucks — front — inside	...	...	1	...	...			
flanges, for trucks — front — outside	...	...	1	...	...			
flanges, for trucks — rear — inside	...	...	1	...	...			
flanges, for trucks — rear — outside	...	...	1	...	...			
pinion, spindle bevel, gear, traversing ... front ...	...	...	1	...	...			
pinion, spindle bevel, gear, traversing ... rear ...	...	...	1	...	...			
shafts ... elevating	...	...	1	...	...			
shafts ... main ... inside	...	...	4	..	2			
shafts ... main ... outside	...	...	2	..	2			
shafts ... retaining	...	...	2	...	...			
shafts ... 2nd motion	...	...	...	2	...			
shafts ... longitudinal, long, front ...	...	...	...	1	...			
spindle — for clutch pinion ... left ...	...	...	...	...	1			
spindle — for clutch pinion ... right ...	...	...	...	...	1			
spindle — pinion, hand wheel	...	...	1	...	...			
Bollards, with ratchet wheel — left ...	1	1	1	1	...			
Bollards, with ratchet wheel — right ...	1	1	1	1	...			
Bolts, iron, cap, pinion spindle, rack retaining, with 2 nuts	...	...	8	...	...	4		
Brackets, complete, with bolts or screws, cast-iron. friction roller, arc ... ... left	1	...	...	...	1			
friction roller, arc ... ... right	1	...	...	...	1			
guide, rack retaining ... ... centre, right	1	...	...	...	1			
guide, rack retaining ... ... front — left	1	...	...	...	1			
guide, rack retaining ... ... front — right	1	...	...	...	1			
guide, rack retaining ... ... rear ... left	1	...	...	...	1			
guide, rack retaining ... ... rear ... right	1	...	...	...	1			
hook, preventor ... ... left	...	...	...	1	...			
hook, preventor ... ... right	...	...	...	1	...			

Digitized by Google

Moncrieff Wrought-Iron Garrison Carriages, Component and Spare Parts for—*continued.*

Component and spare parts.	R.B.L., 7-in.	R.M.L. 9-in. (Mark II.)	R.M.L. 7-in. (Mark I.)	R.M.L. 7-in. (Mark II.)	R.M.L. 3½-pr. 58 cwt.	Proportions of spare for each: Detached group of Sub-Districts, per 10 guns, or less No. of each nature.	Sub-District, per 10 guns, or less No. of each nature.	Fort or Battery, per 10 guns, or less No. of each nature.
Brackets, with bolts or screws — cast-iron — pinion, spindle — bevel — for trucks — front	1	...	...	1	...			
for trucks — rear	1	...	...	1	...			
winch handle — front	1	...	...	...	...			
winch handle — front — inside	...	...	...	1	...			
winch handle — front — outside	...	...	...	1	...			
winch handle — rear	1	...	...	...	...			
winch handle — rear — inside	...	...	...	1	...			
winch handle — rear — outside	...	...	...	1	...			
elevating — inside — left	1	...	...	...	1			
elevating — inside — right	1	...	...	...	1			
elevating — outside	1	...	...	1	1			
rack, retaining	...	...	2	...	...			
rear, truck	...	...	...	...	2			
shafts — connecting, brake levers — left	...	1	1	1	...			
connecting, brake levers — right	...	1	1	1	...			
elevating — left	...	1	...	...	...			
elevating — right	...	1	...	...	...			
longitudinal — long — inter-mediate — front	...	...	1	...	...			
longitudinal — long — inter-mediate — rear	...	...	1	...	..			
longitudinal — long — rear	...	...	1	...	...			
longitudinal — short — front	...	...	1	...	...			
longitudinal — short — rear	...	...	1	...	...			
main — left	1	...	...	...	1			
main — right	1	...	...	...	1			
retaining — left	...	1	...	...	...			
retaining — right	...	1	...	...	...			
vertical — top	...	...	1	...	...			
vertical — bottom	...	...	1	...	...			
spindle — pinion, hand wheel	...	...	1	...	...			
spindle — windlass — left	...	...	1	...	...			
spindle — windlass — right	...	...	1	...	...			
spindle — worm	1	...	...	1	1			
spindle — worm — front	...	1	...	...	...			
spindle — worm — rear	...	1	...	...	...			
stage, loading — left	...	...	1	...	...			
stage, loading — right	...	...	1	...	...			
wheel, spur and pinion, gear traversing — front	...	1	...	...	...			
wheel, spur and pinion, gear traversing — rear	...	1	...	...	...			
guide, pointer	...	1	...	...	...			
metal — pinion, spindle — hauling down	...	...	1	...	...			
pinion, spindle — rack, retaining — left	...	...	1	...	...			
pinion, spindle — rack, retaining — right	...	...	1	...	...			
pinion, spindle — spur, winch handle — left	...	...	1	...	...			
pinion, spindle — spur, winch handle — right	...	...	1	...	...			
spindle, for clutch pinion — left	...	...	...	1	...			
spindle, for clutch pinion — right	...	...	...	1	...			

Digitized by Google

Moncrieff Wrought-Iron Garrison Carriages, Component and Spare Parts for—*continued.*

Component and spare parts.		R.B.L., 7-in.	R.M.L. 9-in. (Mark II.)	R.M.L. 7-in. (Mark I.)	R.M.L. 7-in. (Mark II.)	R.M.L. 4¾-pr., 58 cwt.	Proportions of spare for each: Detached group of Sub-Districts. per 10 guns, or less No. of each nature.	Sub-District. per 10 guns, or less No. of each nature.	Fort or Battery. per 10 guns, or less No. of each nature.
Brackets, with bolts or screws, iron	friction roller, arc, with collar and pin	left	1	...	...	...			
		right	1	.	...	...			
	guide — elevating	left	1	1	...	1	1		
		right	1	1	...	1	1		
	guide — hook, preventor	left	...	...	1	...	...		
		right	...	...	1	...	...		
	lever, brake		...	...	2	...	...		
	pinion, spindle, elevating, and friction roller	left	...	...	...	1	...		
		right	...	...	...	1	...		
	shaft — cross, 2nd motion		...	...	...	1	...		
	shaft — longitudinal, long, front		...	...	...	1	...		
	sheave, loading gear, pair	bottom	...	1	...	1	...		
		centre	...	1	...	1	...		
		top	...	1	...	1	...		
	spindle — bollard	left	1	1	...	...	...		
		right	1	1	...	...	...		
	spindle — pawl	left	...	1	...	...	...		
		right	...	1	...	...	...		
	standard	left	...	...	...	...	1		
		right	...	...	...	...	1		
Buffers, including	spindles and keys, with disc springs		...	1	...	...	...		
	stop, spindle and nut, with disc springs	left	1	...	...	...	...		
		right	1	...	...	...	...		
Flanges, truck	cast — iron — front	left	1	...	...	1	1		
		right	1	...	...	1	1		
	cast — iron — rear	left	1	...	...	1	...		
		right	1	...	...	1	...		
	cast — steel — centre	left	...	1	...	...	...		
		right	...	1	...	...	...		
	cast — steel — front	left	...	1	...	...	...		
		right	...	1	...	...	...		
	cast — steel — rear	left	...	1	...	...	...		
		right	...	1	...	...	...		
	iron, pairs — front	left	...	...	1	...	...		
		right	...	...	1	...	...		
	iron, pairs — rear	left	...	...	1	...	...		
		right	...	...	1	...	...		
Ladders, iron, with bolts, and stays		left	1	...	1	1	1		
		right	...	...	1	...	...		
		long	...	1	...	...	...		
		short	...	1	...	...	...		
Pawls, iron, bollard		left	1	1	1	1	...		
		right	1	1	1	1	...		

Digitized by Google

Moncrieff Wrought-Iron Garrison Carriages, Component and Spare Parts for—*continued.*

Component and spare parts.	R.B.L., 7-in.	R.M.L. 9-in. (Mark II.)	R.M.L. 7-in. (Mark I.)	R.M.L. 7-in. (Mark II.)	R.M.L. ¾-pr., 58 cwt.	Proportions of spare for each: Detached group of Sub-Districts. per 10 guns, or less No. of each nature.	Proportions of spare for each: Sub-District. per 10 guns, or less No. of each nature.	Proportions of spare for each: Fort or Battery. per 10 guns, or less No. of each nature.
Pointers, iron, with screws: and steel plate: front	...	1	...	...	...			
Pointers, iron, with screws: and steel plate: rear	...	1	1	...	...			
Pointers, iron, with screws: front	...	1	...	1	1			
Pointers, iron, with screws: rear	...	1	...	1	1			
Slides, L body, iron, without fittings	...	1	1	1	1			
Spindles, iron: bollard, with collar, nuts, and screws	...	...	...	2	...			
Spindles, iron: bollard, with nuts	...	...	2	...	...			
Spindles, iron: buffer, with keys	...	6	...	...	...	... ...	3	
Springs, disc, spindle buffer: No. 4	...	12	36	34	...			
Springs, disc, spindle buffer: ,, 5	...	...	...	...	16			
Stages, wood, with stays: landing: left	...	1	1	1	1			
Stages, wood, with stays: landing: right	...	...	1	...	...			
Stages, wood, with stays: loading: central	...	1	...	1	...			
Stages, wood, with stays: loading: front	...	...	1	...	...			
Stages, wood, with stays: loading: left	...	...	1	...	...			
Stages, wood, with stays: loading: right	...	...	1	...	...			
Stops, iron, guide elevating, with screws	...	1	...	...	1			
Studs, iron, pawl, bollard, with collars, nuts, and: pins	...	...	...	2	...			
Studs, iron, pawl, bollard, with collars, nuts, and: screws	...	...	2	...	...			
Trays, wood: shot truck	...	1	...	...	...			
Trays, wood: side arms	...	1	...	2	...			
Trucks, cast-iron, plain: 30-in. diameter	...	4	...	...	...			
Trucks, cast-iron, plain: front, 18-in. diameter	...	...	...	...	2			
Trucks, cast-iron, plain: front or rear, right, 21-in. diameter	...	...	...	2	...			
Trucks, cast-iron, plain: front or rear, right, 20 ,,	...	2	...	...	...			
Trucks, cast-iron, plain: rear, 24-inch diameter	...	...	...	...	1			
Trucks, cast-iron, with bevel wheel, left: front, 30 ,,	...	1	...	...	...			
Trucks, cast-iron, with bevel wheel, left: rear, 30 ,,	...	1	...	...	...			
Trucks, cast-iron, with bevel wheel, left: front, 21 ,,	...	...	...	1	...			
Trucks, cast-iron, with bevel wheel, left: rear, 21 ,,	...	...	...	1	...			
Trucks, cast-iron, with bevel wheel, left: front, 20 ,,	1	...	...	...	...			
Trucks, cast-iron, with bevel wheel, left: rear, 20 ,,	1	...	...	...	...			
Trucks, wrought-iron, plain: left, 16 ,,	...	...	2	...	...			
Trucks, wrought-iron, plain: right, 16 ,,	...	...	2	...	...			

Digitized by Google

Moncrieff Wrought-Iron Garrison Carriages, Component and Spare Parts for—*continued.*

Component and spare parts.	R.B.L., 7-in.	R.M.L. 9-in. (Mark II.)	R.M.L. 7-in. (Mark I.)	R.M.L. 7-in. (Mark II.)	R.M.L. 32-pr., 58 cwt.	Proportions of spare for each: Detached group of Sub-Districts, per 10 guns, or less No. of each nature.	Proportions of spare for each: Sub-District, per 10 guns, or less No. of each nature.	Proportions of spare for each: Fort or Battery, per 10 guns, or less No. of each nature.
Gear, Elevating.								
Arcs, iron, elevating { left			1				1	
{ right			1				1	
Bars, iron, radius, complete { left	1	1		1	1			
{ right	1	1		1	1			
Bolts, iron, with nut { and collar, cascable		1						
{ connecting links		1						
Collars, { cast-iron, bar, radius	2				2			
{ iron { bar, radius				2				
{ cascable		2						
{ jamming			1					
Cones, cast-iron, friction { inside	1	1	1	1	1			
{ outside	1	1	1	1	1			
Covers, iron, worm { spindle	1	1						
{ wheel	1	1		1	1			
Guides, iron, elevating, with arc { central	1			1	1			
{ left		1						
{ right		1						
Levers, iron, jamming, with set screw			1					
Links, iron, connecting { front { left		1						
{ front { right		1						
{ rear { left		1						
{ rear { right		1						
Pinions, iron, elevating { left			1				1	
{ right			1				1	
{ with spindles { and nut				1			1	
{ with spindles { collars, nuts, and pins					1		1	
Pins, iron, with collar and pin { guide, elevating	1			1	1			
{ rod, connecting	1			1	1			
Plates, metal, indicator, with screws				1				
Pointers { steel { elevating, arc			1					
{ steel { indicator		1						
{ wrought-iron, indicator	1			1	1			
Rods, iron, connecting { central, with bolts	1			1	1			
{ left		1						
{ right		1						
Rollers, friction { cast-iron { arc, elevating				1	1			
{ cast-iron { guide, elevating	†2			1	2			
{ metal { arc, elevating		2						
{ metal { guide, elevating		2			1			
{ wrought-iron { guide, elevating				1				
{ wrought-iron { arc ,,	1							

† 1 left and 1 right.

Digitized by Google

Moncrieff Wrought-Iron Garrison Carriages, Component and Spare Parts for—*continued.*

Component and spare parts.	R.B.L., 7-in.	R.M.L. 9-in. (Mark II.)	R.M.L. 7-in. (Mark I.)	R.M.L. 7-in. (Mark II.)	R.M.L. ¾-pr., 58 cwt.	Proportions of spare for each: Detached groups of Sub-District. per 10 guns, or less No. of each nature.	Proportions of spare for each: Sub-District. per 10 guns, or less No. of each nature.	Proportions of spare for each: Fort or Battery. per 10 guns, or less No. of each nature.
Screws, iron, jamming, spindle, worm	...	...	1	...	...			
Shafts, iron { with key and nuts	...	...	1	...	...			
Shafts, iron { with pinions and nuts	...	1	...	...	...			
Spindles, iron, with collar and... { nut, worm	1	1	1	1	1			
Spindles, iron, with collar and... { pin, friction, roller { arc, elevating	1	...	...	1	1			
Spindles, iron, with collar and... { pin, friction, roller { guide, elevating	1	2	...	1	1			
Stages, wood, laying, with stays	1	1	...	1	1			
Steps, wood, stage, laying	...	1	...	...	...			
Wheels { metal, worm	1	1	1	1	1			
Wheels { iron, hand	1	1	2	1	1			
GEAR, LOADING.								
Chains, iron, with hook	...	1	...	1	...			
Gunrds, iron, spur wheel, and pinion	...	1	...	...	...			
Pinions, M. cast-iron or steel, spur, 14 teeth	...	1	...	...	...			
Pins, iron, sheave... { cheese-head, with collar and pin { long	...	1	...	1	...			
Pins, iron, sheave... { cheese-head, with collar and pin { short	...	1	...	1	...			
Pins, iron, sheave... { plain	...	1	...	1	...			
Sheaves ... { cast-iron { bottom	...	...	...	1	...			
Sheaves ... { cast-iron { centre	...	...	...	1	...			
Sheaves ... { cast-iron { top	...	...	...	1	...			
Sheaves ... { metal ... { bottom	...	1	...	...	...			
Sheaves ... { metal ... { centre	...	1	...	...	...			
Sheaves ... { metal ... { top	...	1	...	...	...			
Spindles, iron, with collar, and ... { nut, pinion, hand-wheel	...	1	...	...	...			
Spindles, iron, with collar, and ... { pin, windlass	...	1	...	...	...			
Trucks, projectile, iron, complete	...	†1	...	1	...			
Wheels { M. cast-iron or steel, spur, 58 teeth	...	1	...	...	...			
Wheels { iron, hand	...	1	...	...	...			
Windlass, cast-iron	...	1	...	...	...			
GEAR, RETAINING								
Hands, friction, brake drum, with bolts ... { iron { left	...	...	...	...	1	... ...	... ...	1
Hands, friction, brake drum, with bolts ... { iron { left	...	1	...	...	...	... ...	... ...	1
Hands, friction, brake drum, with bolts ... { iron { left	...	...	...	1	...	... ...	... ...	1
Hands, friction, brake drum, with bolts ... { iron { right	1	...	...	...	...	... ...	... ...	1
Hands, friction, brake drum, with bolts ... { iron { right	...	1	...	...	...	... ...	... ...	1
Hands, friction, brake drum, with bolts ... { iron { right	...	...	...	1	...	... ...	... ...	1
Hands, friction, brake drum, with bolts ... { steel { left	...	...	1	...	...	... ...	... ...	1
Hands, friction, brake drum, with bolts ... { steel { right	...	...	1	...	...	... ...	... ...	1

† With sling.

Digitized by Google

Moncrieff Wrought-Iron Garrison Carriages, Component and Spare Parts for—*continued.*

Component and spare parts.	R.B.L., 7-in.	R.M.L. 9-in. (Mark II.)	R.M.L. 7-in. (Mark I.)	R.M.L. 7-in. (Mark II.)	R.M.L. 3½-pr., 58 cwt.	Proportions of spare for each: Detached group of Sub-Districts. per 10 guns, or less No. of each nature.	Sub-District. per 10 guns, or less No. of each nature.	Fort or Battery. per 10 guns, or less No. of each nature.
Bars, iron, connecting, with bolts ... ... left	1	1	...	1	1			
right	1	1	...	1	1			
Capstan, heads, cast-iron	2	...	...	...	...	... ...	1	
Collars, iron, shaft main	2	...	...	2	2	... ...	1	
retaining	...	2	...	...	...			
Counterweights, cast-iron, brake lever, with set screws	1	2	2	2	1			
Covers, iron, complete ... ... brake drum ... left	...	1	1	1	...			
right	...	1	1	1	...			
wheel, spur, and pinion clutch ... left	...	...	...	1	...			
right	...	...	...	1	...			
rollers, rack, retaining ... ... left	1	1	...	1	1			
right	1	1	...	1	1			
Cranks, iron, connecting, brake levers	..	2	2	2	...			
Drums, brake, complete ... left	1	...	...	...	...	... ...	1	
	...	1	...	...	...	... ...	1	
	...	...	1	...	...	... ...	1	
	...	...	..	1	...	... ...	1	
	...	...	...	...	1	... ...	1	
right	...	1	...	...	...	... ...	1	
	...	...	1	...	...	... ...	1	
	...	...	...	1	...	... ...	1	
Guards, iron, brake drum, complete ... left	...	1	...	1	...			
right	...	1	...	1	...			
Hooks, iron, preventor, with collars and nuts ...	...	...	2	...	...	1		
Levers metal, clutch	...	...	...	2	..			
pointed No. 2 light	...	...	...	...	3	... ...	... ...	2
,, 5 Moncrieff R.M.L. 9-in.	...	3	...	...	...	... ...	... ...	2
,, 7 Moncrieff R.M.L. 7-in. 4 ft. 1 in. (Mark III.)	...	...	3	...	...	... ...	... ...	2
,, 6 Moncrieff R.M.L. 7-in. 4 ft. 4 in.	...	...	...	3	...	... ...	... ...	2
,, 4 Moncrieff R.B.L., 7-in.	2	...	...	...	...	... ...	... ...	2
iron, brake band	1	2	2	2	1			
shaft, connecting	...	2	2	2	...			
Links, iron, adjusting, brake levers, with pins and keys ... ... pairs	...	2	2	2	..			
Pawls, iron rack retaining left	1	1	...	1	1			
rack retaining right	1	1	...	1	1			
spur wheel, main shaft	...	4	...	...	...			

Digitized by Google

Moncrieff Wrought-Iron Garrison Carriages, Component and Spare Parts for—*continued.*

Component and spare parts.	R.B.L., 7-in.	R.M.L. 9-in. (Mark II.)	R.M.L. 7-in. (Mark I.)	R.M.L. 7-in. (Mark II.)	R.M.L. 11-pr., 58 cwt.	Proportions of spare for each: Detached group of Sub-Districts. per 10 guns, or less No. of each nature.	Proportions of spare for each: Sub-District. per 10 guns, or less No. of each nature.	Proportions of spare for each: Fort or Battery. per 10 guns, or less No. of each nature.
Pinions — iron, spur — clutch, 10 teeth	...	...	...	2	...			
iron, spur — rack, retaining — 9 teeth	...	...	...	...	2			
iron, spur — rack, retaining — 8 ,,	...	2	...	2	...			
iron, spur — shaft ,, 9 ,,	...	...	2	...	...			
spindle, hauling down	...	...	1	...	...			
steel, spur, rack retaining — 8 teeth	...	2	...	...	...			
steel, spur, rack retaining — with spindles, collars, and nuts	...	...	2	...	...			
Pins, iron, securing — lever, clutch	...	...	...	2	...			
Pins, iron, securing — spindle, pinion, hauling down	...	..	1	...	...			
Plates. iron, with screws — boss, brake band ... pairs	...	2	...	2	...			
Plates. iron, with screws — locking, brake lever	...	...	2	...	...			
Racks, iron retaining — cycloidal — left	...	...	1	...	...			
Racks, iron retaining — cycloidal — right	...	...	1	...	...			
Racks, iron retaining — left	...	1	1	...	1	1		
Racks, iron retaining — right	...	1	1	...	1	1		
Rings, hook, preventor — india-rubber set (of 8)	...	...	...	1	...	½ set.		
Rings, hook, preventor — iron, set (of 6)	...	...	...	1	...			
Rollers, rack, retaining — metal —	...	1	...	...	...	½ set.		
Rollers, rack, retaining — metal — set (of 8)	...	...	...	1	...	½ set.		
Rollers, rack, retaining — metal —	...	...	...	...	1	½ set.		
Rollers, rack, retaining — iron, set (of 4)	...	1	...	...	...	½ set.		
Screws — iron — cover, brake drum, sets — (of 12)	...	1	...	...	...	1½ set.		
Screws — iron — cover, brake drum, sets — (of 8)	...	...	1	...	...	1½ set.		
Screws — iron — cover, brake drum, sets — (of 10)	...	...	...	1	...	1½ set.		
Screws — iron — for springs, wheel, spur	...	12	...	...	...			
Screws — iron — links, adjusting, brake levers	...	2	2	2	...			
Screws — iron — (or spindles) rollers, rack, retaining	1	...	...	...	...	½ set.		
Screws — iron — set (of 4)	...	...	...	1	...	½ set.		
Screws — iron — plate, locking, brake lever	...	...	...	...	1	½ set.		
Screws — steel (or spindles) rollers, rack, retaining, set (of 4)	...	...	2	...	...	6		
Shafts — steel, main, with nuts	...	1	...	...	...	½ set.		
Shafts — iron — connecting brake levers	...	1	1	1	...			
Shafts — iron — main, with nuts	...	1	...	1	1			
Shafts — iron — retaining, with nuts	...	...	1	...	...			
Sockets, iron, lever (with pawls) — No. 9	...	2	...	...	...	... ...	... ...	1
Sockets, iron, lever (with pawls) — ,, 10	...	...	2	...	...	... ...	... ...	1
Sockets, iron, lever (with pawls) — ,, 11	...	...	...	2	...	... ...	... ...	1
Spindles, iron, with nuts — collars and pins, bar, connecting	...	...	...	2	2			
Spindles, iron, with nuts — and collars — bar, connecting	2	2	...	...	...			
Spindles, iron, with nuts — and collars — clutch, pinion	...	...	...	2	...			
Spindles, iron, with nuts — and collars — pawl, wheel, spur	...	4	...	...	...			
Spindles, iron, with nuts — pawl, rack, retaining	2	2	...	2	2			

Digitized by Google

Moncrieff Wrought-Iron Garrison Carriages, Component and Spare Parts for—*continued.*

Component and spare parts.	B.B.L., 7-in.	R.M.L. 9-in., Mark II.	R.M.L. 7-in. (Mark I.)	R.M.L. 7-in. (Mark II.)	R.M.L. 12½-pr., 58 cwt.	Proportions of spare for each: Detached group of Sub Districts per 10 guns, or less No. of each nature.	Proportions of spare for each: Sub-District. per 10 guns, or less No. of each nature.	Proportions of spare for each: Fort or Battery. per 10 guns, or less No. of each nature.
Springs, steel, pawl — brake drum	4	...	...	...	...	... ...	... ...	2
Springs, steel, pawl — brake drum	...	12	...	...	...	... ...	... ...	6
Springs, steel, pawl — brake drum	...	...	8	...	...	... ...	... ...	4
Springs, steel, pawl — brake drum	...	...	...	8	...	... ...	... ...	4
Springs, steel, pawl — spur wheel	...	4	...	...	4	... ...	... ...	2
Stops, iron, with handle, spur wheel	...	1	...	...	...			2
Wheels — M. cast-iron or steel, spur, shaft, main, 58 teeth — left	...	1	...	...	...			
Wheels — M. cast-iron or steel, spur, shaft, main, 58 teeth — right	...	1	...	...	...			
Wheels — iron, pawl — pinion, spindle, rack, retaining	...	...	2	...	...			
Wheels — iron, pawl — shaft main	...	2	...	...	...			
Wheels — iron, pawl — shaft retaining	...	2	...	...	...			
Wheels — iron, pawl — spindle, clutch, pinion	...	...	...	2	...			
Wheels — spur — shaft, main, 40 teeth — left	...	...	...	1	...			
Wheels — spur — shaft, main, 40 teeth — right	...	...	...	1	...			
Wheels — spur — hauling down	...	...	1	...	...			
Grab, Traversing.								
Clutches, metal	...	1	...	...	...			
Collars, iron, shaft, longitudinal, with screws	...	...	2	...	...			
Covers, iron, complete — pinion, bevel, shaft, vertical	...	...	1	...	...			
Covers, iron, complete — wheel — and pinion — bevel — front	...	1	...	1	...			
Covers, iron, complete — wheel — and pinion — bevel — rear	...	1	...	1	...			
Covers, iron, complete — wheel — and pinion — spur — left	...	...	1	...	...			
Covers, iron, complete — wheel — and pinion — spur — right	...	...	1	...	...			
Covers, iron, complete — wheel — bevel, front truck	...	...	1	...	...			
Covers, iron, complete — wheel — spur — left	...	...	1	...	...			
Covers, iron, complete — wheel — spur — right	...	...	1	...	...			
Guides, iron, lever clutch, with pin and chain	...	1	...	...	...			
Guards, iron, spur wheel — front	...	2	...	...	...			
Guards, iron, spur wheel — rear	...	2	...	...	...			
Handles, iron, winch — No. 12	2	...	...	...	...	... ...	... ...	1
Handles, iron, winch — ,, 13	...	2	...	...	...	... ...	... ...	1
Handles, iron, winch — ,, 14	...	...	2	...	...	... ...	... ...	1
Handles, iron, winch — ,, 15	...	...	...	2	...	... ...	... ...	1
Keys, iron, driving shaft	...	...	6	...	...			
Levers, iron, clutch	...	1	...	..	..			

Digitized by Google

Moncrieff Wrought-Iron Garrison Carriages, Component and Spare Parts for—*continued.*

Component and spare parts.	R.B.L., 7-in.	R.M.L. 9-in. (Mark II.)	R.M.L. 7-in. (Mark I.)	R.M.L. 7-in. (Mark II.)	R.M.L. 4¾-pr., 58 cwt.	Proportions of spare for each: Detached group of Sub-Districts. per 10 guns, or less No. of each nature.	Proportions of spare for each: Sub-District. per 10 guns, or less No. of each nature.	Proportions of spare for each: Fort or Battery. per 10 guns, or less No. of each nature.
Pintons, bevel, M. cast-iron or steel, shaft, longitudinal, long, 14 teeth	...	...	1	...	...			
Pintons, bevel, M. cast-iron or steel, shaft, longitudinal, short, 14 teeth	...	...	1	...	...			
Pintons, bevel, M. cast-iron or steel, shaft, vertical, 15 teeth	...	...	1	...	...	...	...	1
Pintons, bevel, malleable cast-iron or steel, with spindle, for trucks, 8 teeth, front	1	...	...	1	...			
Pintons, bevel, malleable cast-iron or steel, with spindle, for trucks, 8 teeth, rear	1	...	...	1	...			
Pintons, bevel, metal, shaft, cross, 28 teeth	...	...	1	...	...			
Pintons, bevel, metal, shaft, vertical, 28 teeth	...	...	1	...	...			
Pintons, bevel, steel, with spindle, for trucks, 8 teeth, front	...	1	...	...	...			
Pintons, bevel, steel, with spindle, for trucks, 8 teeth, rear	...	1	...	...	...			
Pintons, winch handle, M. cast-iron, or steel, spur, with wrought-iron spindles, 14 teeth	...	...	2	...	...	...	...	1
Pintons, winch handle, malleable cast-iron or steel, bevel, with spindle, front, 12 teeth	...	...	...	1	...	...	...	1
Pintons, winch handle, malleable cast-iron or steel, bevel, with spindle, front, 8 ,,	1	...	...	...	...	...	...	1
Pintons, winch handle, malleable cast-iron or steel, bevel, with spindle, rear, 9 ,,	...	...	...	1	...	...	...	1
Pintons, winch handle, malleable cast-iron or steel, bevel, with spindle, rear, 8 ,,	1	...	...	...	...	...	...	1
Pintons, winch handle, wrought-iron, spur, with spindle, 9 teeth, front	...	1	...	...	...	...	...	1
Pintons, winch handle, wrought-iron, spur, with spindle, 9 teeth, rear	...	1	...	...	...	...	...	1
Pins, iron, joint, lever clutch, with nut	...	1	...	...	...			
Shafts, iron, cross, 2nd motion	...	...	1	...	...			
Shafts, iron, longitudinal, long	...	...	1	...	...			
Shafts, iron, longitudinal, short	...	...	1	...	...			
Shafts, iron, vertical	...	...	1	...	...			
Spindles, iron, wheel, spur, intermediate	...	2	...	...	...			
Studs, iron, lever clutch, with nut	...	1	...	...	...			
Wheels, M. cast-iron or steel, bevel, for trucks, front, 18 teeth	...	...	1	...	...			
Wheels, M. cast-iron or steel, bevel, for trucks, rear, 26 ,,	...	...	1	...	...			
Wheels, M. cast-iron or steel, bevel, front	2	...	...	...	...	...	...	1
Wheels, M. cast-iron or steel, bevel, rear, 40 teeth	...	...	...	1	...	...	...	1
Wheels, M. cast-iron or steel, bevel, shaft, longitudinal, long, front, 30 teeth	...	...	1	...	...			
Wheels, M. cast-iron or steel, bevel, shaft, longitudinal, short, rear, 30 teeth	...	...	1	...	...			
Wheels, M. cast-iron or steel, spur, front, 53 teeth	...	1	...	...	...	...	...	1
Wheels, M. cast-iron or steel, spur, intermediate, 20 teeth	...	2	...	...	...	...	...	1
Wheels, M. cast-iron or steel, spur, rear, with clutch, 53 teeth	...	1	...	...	...	...	...	1
Wheels, M. cast-iron or steel, spur, 58 teeth	...	...	2	...	...	...	...	1

Digitized by Google

Digitized by Google

PLATFORMS, GROUND, AND SLIDES, L, FOR MEDIUM, PARTS

Component and spare parts.	Platforms, ground.			Slides, Wood. R.B.L. 7-inch. or R.M.L. 64-pr.						
	Siege, double decked, O pivot, Mark I.	R.M.L. howitzer beds.	Mortar octagonal deck.	No. 11, 4 ft. 3 in. parapet.	No. 12, 3 ft. 6 in. parapet.	No. 13, 3 ft. 6 in. parapet. 11 ft.	No. 14 and 40-pr., R.M.L., 80-pr. 5 tons, 64-pr. 58 cwt. also S.B. casemate.	No. 15, 72 cwt. convtd. slide.	No 16, also R.M.L. 80-pr. 5 tons, and 64-pr. dwarf.	No. 17, 40-pr. & S.B. dwarf, also R.M.L. A&B pivots 80-pr. 5 tons.
				7½ and 58 cwt.	71 cwt.					
Axles, truck { iron, with split keys, front or rear	...	...	...	4	4	4	2	...	4	4
steel, with collars and split keys, front or rear	...	...	...	...	...	...	...	...	...	...
	...	...	...	...	...	...	...	...	...	...
	...	...	...	...	...	...	...	...	...	...
	...	...	...	...	...	...	...	...	...	...
	...	...	...	...	...	...	...	...	...	...
Bands, iron { axletree, transporting ...	...	...	...	2	2	2	2	...	2	2
securing hydraulic buffer { front	...	...	...	1	1	...	...	...	...	...
securing hydraulic buffer { rear	...	...	...	1	1	...	...	...	...	...
Beams, wood, double	...	...	3	...	...	...	...	...	...	...
Bearings, metal { indicator	...	...	...	...	...	...	...	...	...	...
shaft { brake ...	...	...	...	...	...	...	...	...	...	...
shaft { 1st motion ...	...	...	...	...	...	...	...	...	...	...
shaft { 2nd ,, ...	...	...	...	...	...	...	...	...	...	...
shaft { 3rd ,, ...	...	...	...	...	...	...	...	...	...	...
Blocks wood, cross, rear	...	...	...	...	...	...	...	...	...	1
Bollards, wood...	...	...	...	...	...	...	1	1	1	1
Bolts, iron with collars and nuts { connecting ...	...	...	4	...	...	...	...	...	...	...
flange { front ...	...	...	...	2	2	2	2	...	2	2
flange { rear ...	...	...	...	2	2	2	2	...	2	2
Brackets, with bolts or screws { cast-iron, derrick, loading ...	...	...	...	...	...	...	...	...	...	...
metal { levers { pointer	...	...	...	...	...	...	...	...	...	...
metal { levers { clutch ...	...	...	...	...	...	...	...	...	...	...
metal { levers { iron pointed, pairs	...	...	...	...	...	...	...	...	...	...
metal { shaft, brake ...	...	...	...	...	...	...	...	...	...	...
Brackets, with bolts or screws, iron { compressor bars { front ...	...	...	...	...	...	1	...	...	...	...
compressor bars { rear { left	...	...	...	...	...	...	...	...	...	...
compressor bars { rear { right	...	...	...	...	...	...	...	...	...	...
guide, lever, clutch ...	...	...	...	...	...	...	...	...	...	...
hydraulic buffer ...	...	...	...	...	...	...	...	...	...	...
pans, drip { front ...	...	...	...	...	...	...	...	...	...	...
pans, drip { rear ...	...	...	...	...	...	...	...	...	...	...

NOTE.—Where articles are interchangeable with others on the same line for

Digitized by Google

RIFLED, AND S.B. ORDNANCE, COMPONENT AND SPARE FOR.

L, Traversing.

R.M.L			Iron.									Proportions of spare for each		
			R.B.L.					R.M.L.						
			7-inch.					7-in. 6½ tons.	64-pr. 64 cwt.					
No. 18, 80-pr. 5 tons, 64-pr. 71 and 58 cwt., 6 ft. parapet.	No. 19, 64-pr. 71 cwt., 2 ft. 7 in. parapet.	No. 20, 64-pr. 71 cwt., 6 ft. parapet.	No. 1, 4 ft. 3 in. parapet.	No. 2, 3 ft. 6 in. parapet.	No. 3, 2 ft. 7 in. parapet.	No. 4, 40-pr.	No. 5, 20-pr. ‡	No. 7, 6 ft. parapet.	No. 8, Mark III. gun, 6 ft. parapet, with circular buffer.	No. 9, 5 ft 6 in. parapet.	No. 10, 40-pr.	No. 6, S.B. B.L. 32-pr.	Detached group of Sub-districts, per 10 guns or less No. of each nature.	Sub-district per 10 guns, or less No. of each nature.	Fort or Battery, per 10 guns or less No. of each nature.
4	2	4	...	...	...	...	...	...	...	...	...	...	...	...	...
...	...	...	4	4	4	...	...	...	...	...	...	...	1	...	...
...	...	...	...	...	...	4	...	...	...	...	...	...	1	...	...
...	...	...	...	...	...	...	4	...	...	...	...	...	1	...	...
...	...	...	...	...	...	...	...	4	...	...	...	...	1	...	...
...	...	...	...	...	...	...	...	...	4	4	...	...	1	...	...
2	2	2	2	2	2	...	...	...	...	2	4	...	1	...	...
...	...	...	...	...	...	...	...	...	...	1	1	...	...	...	...
...	...	...	...	...	...	...	...	...	...	1	1	...	...	...	...
...	...	...	...	...	...	...	...	...	1	...	...	...	...	...	...
...	...	...	...	...	...	...	...	1	2	...	...	...	...	...	...
...	...	...	...	...	...	...	...	2	2	...	...	...	...	...	...
...	...	...	...	...	...	...	...	2	2	...	...	...	...	...	...
...	...	...	...	...	...	...	...	2	...	...	...	...	...	...	...
1	1	...	1	1	1	...	...	...	...	1	...	...	...	...	...
2	2	2	...	...	...	...	...	2	2	2	...	...	...	...	...
2	2	2	...	...	...	...	...	2	2	2	...	...	...	...	...
...	...	1	...	...	...	...	...	1	1	1	...	...	...	...	...
...	...	...	...	...	...	...	...	1	1	...	...	...	...	...	...
...	...	...	2	2	2	...	...	...	...	2	2	...	...	...	...
...	...	...	...	...	...	...	...	1	...	...	...	...	...	...	...
...	...	...	1	1	1	...	...	...	...	...	...	...	...	...	...
...	...	...	1	1	1	...	...	...	...	...	...	...	...	...	...
...	...	...	1	1	1	...	...	...	...	...	...	...	...	...	...
...	...	...	...	...	...	...	...	1	1	...	...	...	...	...	...
...	...	...	...	...	...	...	...	1	...	...	...	...	...	...	...
...	...	...	...	...	...	...	...	...	...	...	1	...	...	...	...
...	...	...	...	...	...	...	...	...	...	...	1	...	...	...	...

which a supply of spare is laid down, they are shown in *italics*.

‡ Not yet manufactured.

Digitized by Google

Platforms, ground, and Slides, L, for Medium, Rifled, and S.B.

Component and spare parts.	Platforms, ground.			Slides, Wood. R.B.L. 7-inch.							
	Siege, double decked, C pivot, Mark I.	R.M.L. howitzer beds.	Mortar, octagonal deck.	or R.M.L. 64-pr. 71 and 58 cwt. No. 11, 4 ft. 3 in. parapet.	or R.M.L. 64-pr. 71 and 58 cwt. No. 12, 3 ft. 6 in. parapet.	or R.M.L. 64-pr. 71 cwt. No. 13, 3 ft. 6 in. parapet. 11 ft.	No. 14 and 40-pr., R.M.L., 80-pr. 5 tons, 64-pr. 58 cwt., also S.B. casemate.	No. 15, 72 cwt. convtd. slide.	No. 16, also R.M.L. 80-pr. 6 tons, and 64-pr. dwarf.	No. 17, 40-pr. & S.B. dwarf, also R.M.L. A&B pivots 80-pr. 6 tons
Brackets, with bolts or screws, iron — side arms — front — double	...	...	...	...	...	...	...	...	...	...
side arms — front — single	...	...	...	...	...	...	...	...	...	...
side arms — rear — double	...	...	...	...	...	...	...	...	...	...
side arms — rear — single	...	...	...	...	...	...	...	...	...	...
tripper, with collar and split key	...	...	...	...	...	1	...	...	...	...
Buffers, hydraulic	...	...	...	1	1	...	...	...	...	...
	...	...	...	...	...	...	...	...	...	...
	...	...	...	...	...	...	...	...	...	...
Buffers, front, consisting of — wood, block, angle bar, 4 spindles and keys, with disc springs	...	...	...	...	...	...	...	...	...	...
2 brackets (1 left and 1 right), 2 spindles and keys, with disc springs	...	...	...	...	...	...	...	...	...	...
wood block, 2 spindles, with nuts and keys, with disc springs	...	...	...	...	...	...	...	...	...	...
Buffers, rear, consisting of 2 brackets (1 left and 1 right) — 2 spindles and keys, with disc springs	...	...	...	...	...	...	...	...	...	...
2 spindles and keys, with disc springs	...	...	...	...	...	...	...	...	...	...
2 spindles, with nuts and keys, with disc springs	...	...	...	...	...	...	...	...	...	...
wood block, 2 spindles, with nuts and keys, with disc springs	...	...	...	...	...	...	...	...	...	...
Carlings, wood — beams	...	...	4	...	...	...	...	...	...	...
Carlings, wood — sleepers	...	...	1	...	...	...	...	...	...	...
Catches, iron, buffer, rear, with bolts ...	...	...	...	...	...	...	...	...	...	...
Derricks, iron, loading, with bearer complete	...	...	...	...	...	...	...	...	...	...
Flanges, for trucks, cast iron — front	...	...	...	...	2	2	..	...	...	...
Flanges, for trucks, cast iron — rear	...	...	...	4†	2	2	2	...	4†	4†

NOTE.—Where articles are interchangeable with others on the same line for

Digitized by Google

Ordnance, Component and Spare Parts for—*continued.*

| L, Traversing. | | |

Platforms, ground, and Slides, L, for Medium, Rifled, and S.B.

Component and spare parts.	Platforms, ground.			Slides, Wood. R.B.L. 7-inch. or R.M.L. 64-pr. 71 and 58 cwt.		71 cwt.				
	Siege, double decked, C pivot, Mark I.	R.M.L. howitzer beds.	Mortar octagonal deck.	No. 11, 4 ft. 3 in. parapet.	No. 12, 3 ft. 6 in. parapet,	No. 13, 3 ft. 6 in. parapet, 11 ft.	No. 14, and 40-pr., R.M.L., 80-pr. 5 tons, 64-pr. 58 cwt. also S.B. casemate.	No. 15, 72 cwt. convtd. slide.	No. 16, also R.M.L. 80-pr. 5 tons, and 64-pr. dwarf.	No. 17, 40-pr. & S.B. dwarf, also R.M.L. A&B. pivots 80-pr. 5 tons
Flanges, for trucks — steel — front	...	...	...	...	...	...	...	...		...
steel — rear	...	...	...	...	...	...	...	...	...	...
steel — rear — left	...	...	...	...	...	...	...	...	...	...
steel — rear — right	...	...	...	...	...	...	...	...	...	...
metal front	...	...	...	...	...	...	2	...	...	...
iron (in 2 pieces each) — front — left	...	...	...	...	...	...	...	...	...	...
iron (in 2 pieces each) — front — right	...	...	...	...	...	...	...	...	...	...
1 fore and 1 hind — rear — left	...	...	...	...	...	...	...	...	...	...
1 fore and 1 hind — rear — right	...	...	...	...	...	...	...	...	...	...
Keys, iron — forelock, pivot, with lanyard	...	1	...	...	...	...	...	...	...	...
split — flat — pivot	...	1	...	...	...	...	...	...	...	...
split — flat — pin, securing	...	4	...	...	...	...	...	...	...	...
split — axles, truck, traversing platform	...	...	...	...	...	...	...	...	...	...
Loops, iron — with nuts	...	...	...	...	...	...	...	...	...	...
Loops, iron — screwed	...	2	...	...	...	...	...	...	...	...
Pads, elastic, pieces, buffer — front	...	...	...	...	...	...	...	...	...	...
Pads, elastic, pieces, buffer — rear	...	...	...	...	...	...	...	...	...	...
	...	...	...	...	...	...	...	...	...	...
	...	...	...	...	...	...	...	...	...	...
Pins, iron, securing pivot	...	4	...	...	...	...	...	...	...	...
Post, hand	...	...	...	...	...	...	2§	...	2§	2§
Pointer, steel	...	...	...	...	...	...	...	...	...	...
Planks, wood — centre — near	...	1	...	...	...	...	...	...	...	...
centre — off	...	1	...	...	...	...	...	...	...	...
centre — set	...	...	...	...	...	...	...	...	...	...
18 ft.	16	...	...	...	...	...	...	...	...	...
12 ft.	28	...	...	...	...	...	...	...	...	...
Pivots, iron, with metal plate	1	1	...	...	...	...	...	...	...	...
Plates — iron, pivot	...	1	...	...	...	...	...	...	...	...
Plates — steel, pivot, with bolts	1	...	...	...	...	...	...	...	...	...
Plugs, filling-hole, hydraulic buffer — No. 20	...	...	...	1	1	...	...	...	...	...
Plugs, filling-hole, hydraulic buffer — No. 45	...	...	...	...	...	...	...	...	...	...

8407 Equip. 1580

NOTE.—Where articles are interchangeable with others on the same line

Digitized by Google

Ordnance, Component and Spare Parts for—*continued.*

L, Traversing.			Iron.										Proportions of spare for each		
R.M.L.			R.B.L.					R.M.L.							
			7-inch.					7-in. 6½ tons.	64-pr. 64 cwt.						
No. 18, 80-pr. 5 tons, 64-pr. 71 and 58 cwt., 6 ft. parapet.	No. 19, 64-pr. 71 cwt., 2 ft. 7 in. parapet.	No. 20, 64-pr. 71 cwt., 6 ft. parapet.	No. 1, 4 ft. 3 in. parapet.	No. 2, 3 ft. 6 in. parapet.	No. 3, 2 ft. 7 in. parapet.	No. 4, 40-pr.	No. 5, 20-pr. †	No. 7, 6 ft. parapet.	No. 8, Mark III. gun, 6 ft. parapet, with circular buffer.	No. 9, 5 ft. 6 in. parapet.	No. 10, 40-pr.	No. 6, S.B. B.L. 32-pr.	Detached group of Sub-districts, per 10 guns or less No. of each nature.	Sub-district, per 10 guns, or less No. of each nature.	Fort or Battery, per 10 guns or less No. of each nature.
...	...	...	...	...	...	...	..	2	2	2	...	...	...	...	...
...	...	...	...	...	...	...	...	2	2	2	...	...	...	...	...
...	...	...	...	...	...	...	...	...	...	...	...	1	...	...	...
...	2	...	...	...	...	...	...	...	...	...	...	1	...	...	...
...	...	...	1	1	1	1	1	...	...	...	1	1	...	...	...
...	...	...	1	1	1	1	1	...	...	...	1	1	...	...	...
...	...	...	1	1	1	1	1	...	...	...	1	...	...	...	...
...	...	...	1	1	1	1	1	...	...	...	1	...	...	...	...
...	...	...	...	...	...	...	...	...	...	...	...	...	...	1	...
...	...	...	...	...	...	...	...	...	...	...	...	...	...	1	...
...	...	...	...	...	...	...	...	...	...	...	...	...	...	...	2
...	...	...	...	...	...	...	...	...	...	...	...	...	...	...	2
...	...	...	4	4	4	4	4	4	4	4	4	4	...	1	...
...	...	...	...	...	...	...	...	...	...	...	...	8	...	2	...
...	...	...	...	...	...	...	...	...	6	...	...	...	...	2	...
...	...	...	...	...	...	...	...	...	...	...	...	8	...	2	...
...	...	...	...	...	...	...	...	...	...	...	...	...	...	...	...
2§	...	...	...	...	...	...	...	2	...	...	...	...	...	...	...
...	1	...	...	...	...	...	...	...	...	...	...	...	...	...	...
...	...	...	...	...	...	...	...	...	...	...	...	...	...	...	...
...	...	...	...	...	...	...	...	...	...	...	...	...	...	...	...
...	...	...	1	1	1	...	...	...	...	1	...	...	...	...	...
...	...	...	...	...	...	...	...	...	...	...	...	...	...	...	...
...	...	...	...	...	...	...	...	...	...	...	...	...	...	...	...
...	...	...	...	...	...	...	...	...	...	...	...	...	...	...	...
...	...	...	...	...	...	...	...	...	...	...	...	...	...	...	...
...	...	...	...	...	...	...	...	...	...	...	...	...	...	...	...
...	1	1	1	1	1	...	...	...	1	...	1	...	...	1	1
...	...	...	...	...	...	...	...	...	...	1	...	...	...	1	1

for which a supply of spare is laid down, they are shown in italics.

† Not yet manufactured. § 80-pr. only.

Digitized by Google

Platforms, ground, and Slides, L, for Medium, Rifled, and S.B.

Component and spare parts.	Platforms, ground.			Slides, Wood. R.B.L. 7-inch. or R.M.L. 64-pr.							
	Siege, doubled decked, O pivot, Mark I.	R.M.L. howitzer beds.	Mortar octagonal deck.	71 and 58 cwt. No. 11, 4 ft. 3 in. parapet.	71 and 58 cwt. No. 12, 3 ft. 6 in. parapet.	71 cwt. No. 13, 3 ft. 6 in. parapet, 11 ft.	No. 14 and 40-pr., R.M.L., 80-pr. 5 tons, 64-pr. 58 cwt. also S.B. casemate.	No. 15, 72 cwt. convtd. slide.	No. 16, also R.M.L. 80-pr. 5 tons, and 64-pr. dwarf.	No. 17, 40-pr. & S.B. dwarf, also R.M.L. A&B pivots 80-pr. 5 tons
Screws, coach { 8 in.	64	...	...	...	...	...	...	...	...	...
5 in.	40	...	...	...	...	...	...	...	...	...
Sides, wood { near	...	1	...	...	...	...	...	...	...	...
off	...	1	...	...	...	...	...	...	...	...
Sleepers, wood	...	...	4	...	...	...	...	...	...	...
Slides, L, body	...	...	...	1	1	1	1	1	1	1
Spindles, iron, buffer, with keys { front	...	...	...	...	...	...	...	...	...	...
front or rear	...	...	...	...	...	...	...	...	...	...
rear...	...	...	...	...	...	...	...	...	...	...
Spindles, iron { buffer, with collar and nuts { front	...	...	...	...	...	...	...	...	...	...
rear	...	...	...	...	...	...	...	...	...	...
bollard, with bolts, nut and collar	...	...	...	...	...	...	...	...	...	...
Springs, disc, spindle, buffer, No. 6	...	...	...	...	...	...	...	...	...	...
Stays, iron, centre	...	1	...	...	...	...	...	...	...	...
Steps { double { front	...	...	...	...	...	...	...	...	...	...
double { rear...	...	...	...	...	...	...	...	...	...	...
wood { side { left	...	...	...	1	1	...	...	...	1	1
wood { side { right	...	...	...	1	1	...	..	...	1	1
wood { sighting	...	...	...	...	...	...	1§	...	1§	1§
Tanks, iron, sponge	...	...	...	...	...	...	...	...	...	...
Transoms, wood { front	...	1	...	...	...	...	...	...	...	...
wood { rear	...	1	...	...	...	...	...	...	...	...
Trucks { steel { front	...	...	...	...	...	...	...	...	...	...
steel { rear	...	...	...	...	...	...	...	...	...	...
iron { front	...	...	...	...	2	2	2	...	...	...
iron { rear	...	...	...	4†	2	2	2	...	4†	4†
GEAR, COMPRESSOR.										
Bars, compressor, iron	...	...	...	...	...	7	...	...	...	...

NOTE.—Where articles are interchangeable with others on the same line
For R.B.L. 7-inch, Nos. 1, 2 and 3, and No. 6, S.B., B.L., 32-pr. † Also front.

Digitized by Google

Ordnance, Component and Spare Parts for—*continued.*

L, Traversing.														Proportions of spare for each		
			Iron.													
R.M.L.			R.B.L.					R.M.L.								
			7-inch.					7-in. 6½ tons.	64-pr. 64 cwt.							
No. 18, 80-pr. 5 tons, 64-pr. 71 and 58 cwt., 6 ft. parapet.	No. 19, 64-pr. 71 cwt., 2 ft. 7 in. parapet.	No. 20, 64-pr. 71 cwt., 6 ft. parapet.	No. 1, 4 ft 3 in. parapet.	No. 2, 3 ft. 6 in. parapet.	No. 3. 2 ft. 7 in. parapet.	No. 4, 40-pr.	No. 5. 20-pr.‡	No. 7, 6 ft. parapet.	No. 8, Mark III. gun, 6 ft. parapet, with circular buffer.	No. 9, 5 ft. 6 in. parapet.	No. 10, 40-pr.	No. 6, S.B. B.L. 32-pr.	Detached group of Sub-districts, per 10 guns, or less No. of each nature.	Sub-district, per 10 guns, or less No. of each nature.	Fort or Battery, per 10 guns or less No. of each nature.
...	...	...	...	...	...	...	...	...	...	...	...	...	...	...	...
...	...	...	...	...	...	...	...	...	...	...	...	...	...	...	...
...	...	...	...	...	...	...	...	...	...	...	...	...	...	...	...
...	...	...	...	...	...	...	...	...	...	...	...	...	...	...	...
1	1	1	1	1	1	1	1	1	1	1	1	...	...	...	...
...	...	...	*4*	*4*	*4*	...	...	...	...	...	...	...	...	1	...
...	...	...	...	...	...	...	...	4	...	...	...	...	...	1	...
...	...	...	*2*	*2*	*2*	...	...	...	...	...	4	...	...	1	...
...	...	...	...	...	...	*2*	*2*	...	...	...	...	...	...	1	...
...	...	...	...	...	...	...	...	...	...	...	...	2	...	1	...
...	...	...	1	1	1	...	...	...	...	1	...	2	...	...	...
...	...	...	42	42	42	14	12	28	12	...	28	52	...	...	{ 4‖ 2*
...	...	...	...	...	...	...	...	...	...	...	...	...	...	...	...
2	...	2	...	...	...	...	...	...	...	...	...	...	...	...	...
2	...	2	...	...	...	...	...	...	...	...	...	...	...	...	...
1	...	1	1	1	...	1	...	1	1	1	...	...	...	...	...
1	...	1	1	1	...	1	...	1	1	1	...	...	...	...	...
1§	...	...	...	...	...	...	...	2	...	...	...	...	...	...	...
...	...	...	...	...	...	...	...	1	1	1	1	...	...	...	...
...	...	...	...	...	...	...	...	...	...	...	...	...	...	...	...
...	...	...	...	...	...	...	...	...	...	...	...	...	...	...	...
...	...	...	...	...	...	2	2	...	...	...	...	...	...	...	...
...	...	...	...	...	...	2	2	...	...	...	...	...	...	...	...
...	2	...	2	2	2	...	...	2	2	2	2	2	...	...	...
4†	2	4†	2	2	2	...	...	2	2	2	2	2	...	...	...
...	...	...	6	6	6	...	...	...	...	...	...	...	...	...	...

for which a supply of spare is laid down, they are shown in *italics*.

‡ Not yet manufactured. § 80-pr. only.

* For R.B.L. Nos. 4 & 5, R.M.L. 7-in. 6½ tons, No. 7, 64-pr, 64 cwt., No. 8 & No. 10, 40-pr.

Digitized by Google

Platforms, ground, and Slides, L, for Medium, Rifled, and S.B.

Component and spare parts.	Platforms, ground.			Slides, Wood.						
				R.B.L.						
				7-inch.						
				or R.M.L. 64-pr.						
	Siege, double decked, C pivot, Mark I.	R.M.L. howitzer beds.	Mortar, octagonal deck.	71 and 58 cwt.		71 cwt.	R.M.L., 80-pr. 5 tons, 64-pr. 58 cwt. also S.B. casemate.	No. 15, 72 cwt. convtd. slide.	No. 16, also R.M.L. 80-pr. 5 tons, and 64-pr. dwarf.	No. 17, 40-pr. & S.B. dwarf, also R.M.L. A&B pivots 80-pr. 5 tons
				No. 11, 4 ft. 3 in. parapet.	No. 12, 3 ft. 6 in. parapet.	No. 13, 3 ft. 6 in. parapet, 11 ft.	No. 14 and 40-pr.,			
Collars, iron, compressor pin { thick	...	...	...	...	...	...	...	...	...	...
Collars, iron, compressor pin { thin	...	...	...	...	...	12	...	...	...	...
Pins, iron, compressor bar, with split key	...	...	...	...	...	2	...	...	...	...
Trippers, iron	...	...	...	...	...	1	...	...	...	...
GEAR, RUNNING IN AND OUT.										
Bands, steel, brake	...	...	...	...	...	...	...	...	...	...
Blocks, metal, thrust	...	...	...	...	...	...	...	...	...	...
Clutches, metal	...	...	...	...	...	...	...	...	...	...
Handles, iron, winch { No. 10 ...	...	...	...	...	...	...	...	...	...	...
Handles, iron, winch { ,, 11 ...	...	...	...	...	...	...	...	...	...	...
Levers, iron { adjusting, brake bands ...	...	...	...	...	...	...	...	...	...	...
Levers, iron { brake	...	...	...	...	...	...	...	...	...	...
Levers, iron { clutch	...	...	...	...	...	...	...	...	...	...
Pawls, iron	...	...	...	...	...	...	...	...	...	...
Pinions, metal { clutch	...	...	...	...	...	...	...	...	...	...
Pinions, metal { shafts, 1st motion ...	...	...	...	...	...	...	...	...	...	...
Pins, { steel, connecting brake bands with collar and split key	...	...	...	...	...	...	...	...	...	...
Pins, { iron, securing lever clutch with chain	...	...	...	...	...	...	...	...	...	...
Pointers, steel, indicator	...	...	...	...	...	...	...	...	...	...
Shafts, iron { 1st motion	...	...	...	...	...	...	...	...	...	...
Shafts, iron { 2nd ,, ...	...	...	...	...	...	...	...	...	...	...
Shafts, iron { 3rd ,, ...	...	...	...	...	...	...	...	...	...	...
Shafts, iron { brake ,, ...	...	...	...	..	...	...	...	...	...	...
Sockets, iron, adjusting brake bands ...	...	...	...	...	...	...	...	...	...	...
Spindles, iron, pawl, with collar ...	...	...	...	...	...	...	...	...	...	...
Wheels { pawl	...	...	...	...	...	...	...	...	...	...
Wheels { spur { 2nd motion ...	...	...	...	...	...	...	...	...	...	...
Wheels { spur { 3rd ,, ...	...	...	...	...	...	...	...	...	...	...

NOTE.—Where articles are interchangeable with others on the same line

Digitized by Google

Ordnance, with Component and Spare Parts for the same—*continued.*

L, Traversing.

R.M.L.			Iron.										Proportions of spare for each		
			R.B.L.					R.M.L.							
			7-inch.					7-in. 6½ tons.	64-pr. 64-cwt.						
No. 18, 80-pr. 5 tons, 64-pr. 71 and 58 cwt., 6 ft. parapet.	No. 19, 64-pr. 71 cwt., 2 ft. 7 in. parapet.	No. 20, 64-pr. 71 cwt., 6 ft. parapet.	No. 1, 4 ft. 3 in. parapet.	No. 2, 3 ft. 6 in. parapet.	No. 3, 2 ft. 7 in. parapet.	No. 4, 40-pr.	No. 5, 20-pr.‡	No. 7, 6 ft. parapet.	No. 8, Mark III. gun, 6 ft. parapet with circular buffer.	No. 9, 5 ft. 6 in. parapet.	No. 10, 40-pr.	No. 6, S.B. B.L. 32-pr.	Detached group of Sub-districts, per 10 guns or less No. of each nature.	Sub-district per 10 guns, or less No. of each nature.	Fort or Battery, per 10 guns or less No. of each nature.
...	...	...	4	4	4	...	...	...	...	...	...	...	...	...	...
...	...	...	10	10	10	...	...	...	...	...	...	...	...	...	...
...	...	...	2	2	2	...	...	...	...	...	...	...	...	...	...
...	...	...	1	1	1	...	...	...	...	...	...	...	...	...	...
...	...	...	...	...	...	...	...	1	2	...	...	...	...	...	...
...	...	...	...	...	...	...	...	...	2	...	...	...	...	...	...
...	...	...	...	...	...	...	...	1	1	...	...	...	...	...	...
...	...	...	...	...	...	...	...	2	...	...	...	...	...	...	1
...	...	...	...	...	...	...	...	...	2	...	...	...	...	...	1
...	...	...	...	...	...	...	...	1	1	...	...	...	...	...	...
...	...	...	...	...	...	...	...	1	1	...	...	...	...	...	...
...	...	...	...	...	...	...	...	1	1	...	...	...	...	...	...
...	...	...	...	...	...	...	...	...	1	...	...	...	...	...	...
...	...	...	...	...	...	...	...	1	1	...	...	...	...	...	...
...	...	...	...	...	...	...	...	1	2	...	...	...	...	...	...
...	...	...	...	...	...	...	...	1	1	...	...	...	...	...	...
...	...	...	...	...	...	...	...	...	1	...	...	...	...	...	...
...	...	...	...	...	...	...	...	1	1	...	...	...	...	...	...
...	...	...	...	...	...	...	...	1	...	...	...	...	...	...	...
...	...	...	...	...	...	...	...	1	1	...	...	...	...	...	...
...	...	...	...	...	...	...	...	1	2	...	...	...	...	...	...
...	...	...	...	...	...	...	...	...	1	...	...	...	...	...	...
...	...	...	...	...	...	...	...	1	1	...	...	...	...	...	...

or which a supply of spare is laid down, they are shown in *italics*.

‡ Not yet manufactured.

Digitized by Google

FITTINGS, COMPONENT AND SPARE PARTS OF ORDNANCE, QUICK FIRING, 4·7-INCH.

Component parts.	No.	Proportion of spare	
		Per Gun.	To No. of guns or less per work.
ORDNANCE, QUICK FIRING, 4·7-INCH, MARK I. AND II. (STEEL, 41-CWT.).			
Bushes, firing-hole*	1	1	1 per breech screw component and spare.
Carriers (steel, with washer, hinge bolt, washer and keep pin; catch retaining breech screw (open) with axis pin, socket, set screw, and spiral spring; and nut retaining striker with set screw)	1	...	1 to 10.
Contacts, lever, electric firing (aluminium bronze, consisting of contact, bush insulating, washer, box bush contact, securing nut and washer; buffer washer; tube protecting lead, armoured cable with 2 unions, 2 washers; and nut retaining contact)	...	1	
Extractors (steel, with lever and fixing screw, buffer, spiral spring and cover; plate actuating with axis pin, washer and split pin, and filling piece with 2 fixing screws and lubricating screw)	1	...	1 to 6.
Guards, lever, electric firing (bronze, with clamping screw and chain; flat spring with axis pin; cap protecting contact with axis pin; bracket steadying shield with 2 fixing screws and steadying screw)	1	...	1 to 6.
Levers — cam (steel, with hinge bolt, washer, and keep pin)	...	...	1 to 2.
Levers — electric firing (steel, with axis pin; contact, bush insulating contact, washer, box bush contact; securing nut and washer, buffer washer, tube protecting lead; armoured cable with 2 unions, and 2 washers; and nut retaining contact)	1	...	1 to 6.
Links, cam lever (steel, with axis pin)	...	...	1 to 2.
Needles, striker percussion (steel)	1	...	1 to 6.
Pins, keep — contact, steel, for breech screw	...	1	
Pins, keep — extractor (steel), split, for axis pin, plate, actuating	...	...	3 to 2.
Pins, keep — hinge, bolt — lever, cam (steel), split	...	...	3 to 2.
Pins, keep — hinge, bolt — carrier (steel), split	...	...	3 to 2.
Screws — breech (steel, with fixing screw, end plate and 4 fixing screws; cam lever with hinge bolt, washer and keep pin; link cam lever, with axis pin, and bracket supporting with 2 fixing screws; catch cam lever with spiral spring and stop screw, and trigger sear, in two parts, with fixing screw and spiral spring; and bush firing-hole)†	1	...	1 to 10
Screws — fixing — breech screw (steel)	...	...	1 to 2.
Screws — fixing — striker nut (steel)	...	1	
Screws — fixing — trigger sear (steel)	...	1	
Screws — preserving eyebolt (bronze)	1		

* For breech screws that are prepared for bushes only.
† See "Bushes, firing-hole."

Digitized by Google

Fittings, Component and Spare Parts of Ordnance, Quick Firing, 4·7-inch—*continued.*

Component parts.	No.	Proportion of spare	
		Per Gun.	To No. of guns or less per work.
Springs { catch, { breech screw, open (steel, spiral) ...	...	...	3 to 2.
Springs { retaining { cam lever (steel, spiral)	...	...	3 to 2.
Springs { extractor (steel, spiral)	...	...	3 to 2.
Springs { guard, lever, electric firing (steel, flat)	...	1	
Springs { main, (steel, spiral)	...	1	
Springs { trigger sear (steel, spiral)	...	3	
Striker, electric and percussion (steel, with sheath in two parts with set screw; needle for striker; bush insulating needle; tube protecting bush insulating and washer; nut retaining tube with set screw; angle piece for lead with 2 washers and cap; cover protecting lead; contact breech screw with bush insulating, 2 washers, box contact, cover and keep pin; and main spring)	1	2	
Triggers (steel, with axis pin and lanyard; trigger bolt; and bracket with 2 fixing screws)	1	...	1 to 6.
Washers, buffer, lever electric firing (india rubber)	...	6	
IMPLEMENTS.			
Levers, lengthening cam lever (wrought iron) ...	1		
Wrenches { A (steel)	1	...	1 to 6.
Wrenches { B ,, ...	1	...	1 to 6.
Wrenches { bush, firing-hole (steel)	...	...	1 to 6.
APPURTENANCES.			
Battery, Le Clanché, firing, Q.F., 4·7-inch box (wood, with lid, 2 clamping screws, and securing band with 5 fixing screws)	1	...	1 to 6.
Clamp, tangent sight, Q.F. 4·7-inch (bronze, automatic)	1	1	
Extractor, cartridge, hand, Q.F., small steel	...	...	3 to 2.
Rimer, vent, axial (bronze, V. M. and P.)	...	...	1 to 2.
Sights { fore, Q.F. 4·7-inch (bronze V.M.P.)	1	...	2 to 5.
Sights { tangent, Q.F. 4·7-inch (steel, with 2 range strips and scale plate)	1	...	2 to 5.

57 Gen. No. 2699

38407 Equip. 1484

Digitized by Google

57—Gen. No. 5205

FITTINGS, COMPONENT AND SPARE PARTS OF ORDNANCE, QUICK-FIRING, 12-PR. 12 CWT. A.

Component parts.	No.	Proportion of spare: Per Gun.	Proportion of spare: To No. of guns or less per work.
ORDNANCE, QUICK FIRING, 12-PR., 12 CWT. A. (STEEL, 3-INCH CALIBRE).			
Bracket, supporting contact (steel, with two fixing screws)	1	...	1 to 10
Bushes { firing hole (steel)	...	...	*
Bushes { sliding block (bronze, traversing, breech screw)	...	1	
Carriers (bronze, with bearing washer and lubricating screw; hinge bolt, washer, lubricating screw, and keep pin; sliding block, bush and axis pin for link with fixing screw and lubricating screw; lever breech mechanism, with nut, keep pin and lubricating screw; link actuating breech screw with nut lubricating screw and keep pin; safety stop (in two parts) with fixing screw and spiral spring; catch retaining breech screw open with spiral spring, bracket with four fixing screws and guide screw; and eye supporting cable)	1	...	1 to 10
Extractors (steel with lever, and fixing screw, buffer, spiral spring and cover plate, actuating with axis pin, washer and split pin, and nut retaining)	1	...	1 to 6
Levers, breech mechanism (steel)	...	...	1 to 2
Needles (steel, striker, electric and percussion, with two nuts)	...	...	1 to 6
Pins, keep { bolt, hinge, carrier (steel, bulb head)	...	...	3 to 2
Pins, keep { link, actuating breech screw (steel, split) ...	...	...	3 to 2
Pins, keep { nut, lever, breech mechanism (steel, split) ...	...	...	3 to 2
Pins, keep { pin, axis, extractor, cartridge (steel, split) ...	...	...	3 to 2
Screws, { breech (steel, with fixing screw and lubricating screw and bush firing hole)	1	...	1 to 10
Screws, { fixing breech screw (steel)	...	...	1 to 2
Springs { catch, retaining, breech-screw open (steel, spiral)	...	...	3 to 2
Springs { extractor (steel, spiral)...	...	...	3 to 2
Springs { main (steel, spiral)	...	1	
Springs { stop, safety (steel, spiral)	...	...	3 to 2
Stops, safety (steel, in two parts, with fixing screw and spiral spring)	...	...	1 to 2
Strikers, electric and percussion (steel, with cocking handle, needle, two nuts for needle, bush insulating in two parts, steel sheath, main spring; three leather washers, nut for sheath, with steel head, contact piece, bush insulating, and nut; nut retaining striker, with trigger, spring for trigger, washer filling and cap, and leather collar with wax end)	1	2	
54—Arty. 3025 **Triggers** (steel, with spring for trigger, washer filling, and cap)	...	2†	
Washers, leather, striker, electric, and percussion (3 to a set, large, medium, and small) ... ... sets	...	2	

* 1 to each breech screw, component and spare.
† Per striker, electric and percussion.

Digitized by Google

57—Gen. No. 5205

Fittings, Component and Spare parts of, Ordnance, Quick-Firing, 12-pr., 12 cwt. A.—*continued.*

Component parts.	No.	Proportion of spare. Per Gun.	Proportion of spare. To No. of guns or less per work.	
IMPLEMENTS.				
Drifts (bronze, for hinge bolt in carrier)	...	...	1 to 4	
Drivers, screw	1	...	1 to 4	54—Arty. 3025
Hammers, lead (handled)	...	...	1 to 4	
Punches (steel, length, 5 inches)	...	...	1 to 4	
Wrenches "D" (steel nuts of axis pins of lever breech mechanism and link actuating	...	...	1 to 4	54—Arty. 3025
Wrenches "E" (steel, extractor)	...	...	1 to 4	
APPURTENANCES.				
Extractors, cartridge, hand, Q.-F. small (steel) ...	1	...	1 to 4	
Ordnance, Q.F. cans, oil (tin for all Q.-F. ordnance, except 4·7-inch)	...	...	1 to 4	
Ordnance, Q.F. wrenches, bush, firing hole, steel ...	...	...	1 to 6	
Rimers, vent, axial (bronze, V. M., and P.)	...	...	1 to 4	
Sights, Q.F., bar, rocking* fore, 12-pr., 12-cwt. (steel, with cross-wires)	1			54—Arty. 3025
Sights, Q.F., bar, rocking* hind, 12-pr., 12-cwt. (steel, with range strip, securing nut, and fixing screws; axis pin, and nut; and fixing screw for foresight)	1			
Sights, Q.F., bar, rocking* carrier, 12-pr., 12-cwt. (steel with bracket, worm wheel and 4 fixing screws, worm and worm spindle, hand wheel, and 2 nuts; pinion spindle, with 2 nuts, worm wheel cylinder, with range strip and 3 clamping nuts; and reader with fixing screw)	1			
Sights, Q.F., bar, rocking* wire, foresight (aluminium) ... yds.	...	2		

* These sights are not interchangeable, except as a whole.

71
1
5732

Digitized by Google

38407
Equip.
1484

COMPONENT AND SPARE PARTS FOR CARRIAGE, GARRISON, Q.F. 4·7-INCH, CENTRAL PIVOT.

Component Parts.	No.	Proportion of spare	
		Per mounting.	To No. of mountings or less per work.
CARRIAGE, GARRISON, Q.F. 4·7-INCH, CENTRAL PIVOT, MARK I. (STEEL, WITH SHIELD AND PEDESTAL).			
CRADLE.			
Bands, steel, box, battery, with screws ...	1		
Brackets, sight { fore	1	...	1 to 5
Brackets, sight { tangent	1	...	1 to 5
Caps, running out, spring	1	...	1 to 10
Covers, metal, cradle, with screws	1		
Cradles, metal, with hydraulic buffer	1		
Glands, piston rod { inner, metal	1	...	1 to 10
Glands, piston rod { outer, steel...	1	...	1 to 10
Keys, steel, stop, with screw	1		
Loops, steel, securing, with screws	1		
Lubricators, metal...	2		
Packing, cotton, plaited (length of 3 feet), lengths	1	2	
Pistons, steel, with rods, nuts and pin ...	1	...	1 to 10
Plates, metal, instruction...	1		
Plugs { metal, tank	1	...	1 to 5
Plugs { steel { air...	1	...	1 to 5
Plugs { steel { drain	1	...	1 to 5
Plugs { filling hole, hydraulic buffer, No. 10...	1	...	1 to 5
Plungers, controlling, running out	1	...	1 to 10
Rings { metal, leather, packing	1	...	1 to 10
Rings { packings, hydraulic buffer, leather, L section...	1	2	
Rods, running out gun, steel	2	...	2 to 5
Shields, metal, with screws	1		
Springs, running out, with case and bolts, complete	1	...	1 to 5
Valve keys, with bolt	1	...	1 to 10
Washers, packing, hydraulic buffer, leather (set of 4) ... ... sets*	1	2	

* Packings, Leather.	Diameter, inches.	Diameter of hole, inches.	No. to a set.
Washers, leather—			
Bolt, valve key	1·3	·76	1
Gland, outer	6·59	6·0	1
Plug { filling...	1·0	·625	1
Plug { tank	3·5	3·0	1

Digitized by Google

Component and Spare Parts for Carriage, Garrison, Q.F. 4·7-inch, Central Pivot—*contd.*

Component Parts.	No.	Proportion of spare	
		Per mounting.	To No. of mountings or less per work.
GEAR, ELEVATING.			
Arcs, elevating, steel	1		
Pinions, steel, with spindle, rings friction, collars, spring, nuts and split key	1	...	1 to 10
Pointers, arc, elevating, metal, with washer and screw	1	...	1 to 10
Screws, securing arc, elevating, steel	2		
Shoulder-pieces, complete	1	...	1 to 10
Spindles, steel, worm, elevating, with screw retaining mitre wheel	1	...	1 to 10
Washers, spring, Belleville	1	...	1 to 2
Wheels metal hand, with handle... ...	1	...	1 to 10
Wheels metal worm	1	...	1 to 10
Wheels mitre with spindle, for hand-wheel	1	...	1 to 10
Wheels mitre worm spindles	1	...	1 to 10
Worms, steel	1	...	1 to 10
GEAR, TRAVERSING.			
Pinions, with spindle and handle for clamp ...	1	...	1 to 10
Rings, friction metal, ·25 inch thick	4	...	4 to 10
Rings, friction steel ·1875 " "	4	...	4 to 10
Rings, friction steel ·375 " "	1	...	1 to 10
Rings, friction steel ·5 " "	1	...	1 to 10
Spindles, worm, traversing, steel, with collars and keys	1		
Washers, spring, Belleville	1	...	1 to 2
Wheels, metal bevel	1		
Wheels, metal hand, with handle	1		
Wheels, metal worm	1		
Worms, traversing, steel	1		
CARRIAGE.			
Axles, roller, manganese bronze, with nut, collar, and split key	18	1	
Bearings, metal, pinion, spindle, elevating, with screws	1		
Brackets, metal, with bolts or screws elevating gear	1		
Brackets, metal, with bolts or screws pinion spindle, level, gear, traversing	1		
Brackets, metal, with bolts or screws pointer, arc, elevating ...	1		
Brackets, metal, with bolts or screws worm, traversing	1		
Capsquares, steel	2		
Carriage body, with base plate with centre bearing, and upper roller path	1		
Keys, cap square, steel, with chain and stud...	2	2	
Loops, steel, with screws, for housing bevel pinion	1		

Digitized by Google

Component and Spare Parts for Carriage, Garrison, Q.F. 4·7-inch, Central Pivot—*contd.*

Component Parts.	No.	Proportion of spare	
		Per mounting.	To No. of mountings or less per work.
CARRIAGE—*continued.*			
Lubricators, metal, plug, pivot, with copper pipe and screws	1		
Pedestals, steel, with bolts, holding down, and securing pivot plate	1		
Plates cover, metal, with screws: lubricating axles	1		
Plates cover, metal, with screws: removing rollers	1		
Plates steel, with bolts: clip, front	2	...	1 to 10
Plates steel, with bolts: clip, rear	1	...	1 to 10
Plates steel, pivot, with pivot plug, nut, and split key	1		
Rings, roller, steel	1		
Rollers, steel	18	1	
SHIELDS.			
Arcs, lever, tilting	1		
Boxes, spare, cable, with screws and washers	1		
Brackets arc, lever, tilting, with countersunk head screws	1		
Brackets hinge, roof of shield, with countersunk head screws: left	1		
Brackets hinge, roof of shield, with countersunk head screws: right, with tilting lever	1		
Brackets hinge, shield outer, with countersunk head screws: left	1		
Brackets hinge, shield outer, with countersunk head screws: right	1		
Brackets steel, spare battery-box, with screws: left	1		
Brackets steel, spare battery-box, with screws: right	1		
Covers, sliding, port, shield, inner, steel, with countersunk head screws, and catch-plate	1		
Levers, counterweight, with set screw	2		
Pins hinge, roof of shield	2		
Pins loop, securing, lever, tilting, with chain and stud	1		
Rollers friction, lever, counterweight, metal	2		
Rollers guide, shield, inner, steel	4		
Screws, securing, arc, lever, tilting	1		
Shields, steel, with inner bolts or screws	1		
Shields, steel, with outer, with roof complete	1		
Spindles, steel: rollers, friction, lever, counterweight, with nut and split key	2		
Spindles, steel: rollers, guide, shield, inner, long, with collar and split key	2		
Spindles, steel: rollers, guide, shield, inner, short, with collar and split key	2		

Digitized by Google

COMPONENT AND SPARE PARTS FOR CARRIAGE, GARRISON, Q.F., 12-PR.

57—Gen.No. 5327

Description.	No.	Proportion of spare: Per mounting.	Proportion of spare: To No. of mountings or less per work.	
CRADLE.				
Bushes, steel, adjusting, carrier, with set screw ... ... { eccentric	1			
{ plain	1			
Caps, running out, spring, steel	1	...	1 to 10	
Cradles, metal, without fittings	1			
Glands, piston rod, metal { inner	1	...	1 to 10	
{ outer	1	...	1 to 10	54—Arty. 3025
Lubricators, metal	1			
Packings ... ... lengths	1	2		
Pistons, steel, with rod, nuts, and split key	1	...	1 to 10	
Plates, metal, incription, with screws ...	1			
Plugs metal { cylinder	1	...	1 to 5	
Plugs metal { tank	1	...	1 to 5	
Plugs steel, filling hole, hydraulic buffer, No. 10, also air and drain holes ...	3	...	3 to 5	
Plungers, controlling, running out, metal ...	1	...	1 to 10	
Rings, packing, hydraulic buffer, leather, L. section	1	2		
Rods, running out gun, steel	2	...	2 to 5	
Screws, fixing, carrier sight bar, steel ...	2			
Seats, steel, bracket, gear, firing, electric ...	1			54—Arty. 3025
Shields, metal, with screws	1			54—Arty. 3025
Springs, running out, with spring compressor, dividing bush, plate for end of spring, and bolt compressing spring...	1	...	1 to 5	
Valves, key, with bolt	1	...	1 to 10	
Washers, packing, leather (set of 6) ... sets	1	2		
Bands, steel, box, battery, with screws ...	2			
PIVOT.				
Brackets, with bolts or screws { metal, elevating gear, in two pieces	1			54—Arty. 3025
Brackets, with bolts or screws { steel { spare battery and cable box	1			
Brackets, with bolts or screws { steel { supporting, gear elevating	1			
Capsquares, steel	2			
Pins, capsquare, steel, with chain and stud...	2	2		
Pivots, steel, without fittings	1			
Plates, metal, inscription, with screws ...	1			
Shoulder-pieces, complete	1	...	1 to 10	
Stays, steel, supporting shield, with screws, and spring disc, No. 38	2			54—Arty. 3025

Digitized by Google

57—Gen. No. 5327

Component and Spare parts for Carriage, Garrison, Q.F., 12-pr.—*contd.*

Description.	No.	Proportion of spare	
		Per mounting.	To No. of mountings or less per work.
GEAR, ELEVATING.			
Arcs, steel, elevating	1		
Pinions, steel, with spindles, rings friction, collars, disc spring, No. 37, nuts and split keys	1	...	1 to 10
Pointers, arc elevating, metal, with collar and screw	1	...	1 to 10
Screws, steel, securing arc elevating	2		
Spindles, steel, worm, elevating with collar...	1	...	1 to 10
54—Arty. 3025 **Springs**, disc, No. 37	1	...	1 to 2
Wheels metal hand, with handle	1	...	1 to 10
Wheels metal worm	1	...	1 to 10
Wheels steel, mitre, with spindle for hand-wheel	1	...	1 to 10
Worms, steel, with mitre wheel	1	...	1 to 10
GEAR, FIRING, ELECTRIC.			
Brackets, metal cable connecting cradle to gun... ...	1		
Brackets, metal cable connecting ,, to pistol grip...	1		
54—Arty. 3025 **Boxes**, with screws and washers battery	2		
Boxes, with screws and washers spare cable	1		
Cables, with connections cradle to gun	1		
Cables, with connections ,, to pistol grip	1		
Cables, with connections pistol grip to battery	1		
Keys, firing	1		
Pistol grip, with trigger, metal	1		
PEDESTAL.			
Bushes, metal lower, with fixing screw and friction stud	1		
Bushes, metal upper	1		
Blocks, jamming pivot	1		
Handles, steel, screw, clamping	1	...	1 to 10
Pedestals, steel, without fittings	1		
Plates, metal, instruction with screws ...	1		
Screws, steel clamping pivot, with split key ...	1	...	1 to 10
Screws, steel holding down...	18		
Screws, steel securing pivot	1		
Springs, disc, No. 39, steel, block jamming ...	2		
Tubes, copper, lubricating, with metal nut...	1		
SHIELD.			
Arcs, lever, tilting	1		
Brackets, with screws, steel arc, lever, tilting	1		
Brackets, with screws, steel hinge, roof of shield left	1		
Brackets, with screws, steel hinge, roof of shield right, with tilting lever	1		
Brackets, with screws, steel hinge, shield left	1		
Brackets, with screws, steel hinge, shield right ...	1		
Pins, steel hinge, roof of shield	2		
Pins, steel loop, securing lever, tilting, with chain and plug	1		
54—Arty. 3025 **Shield**, steel, without fittings	1		

Digitized by Google

SPARE STORES ALLOWED FOR WORKING GUNS WHICH FORM THE ARMAMENT OF DISTRICTS, AND FOR MAGAZINES.

Articles.	Proportion.	Remarks.
Woolwich Store Charge, No. 10.		
Jacks, lifting, hydraulic, G.S. ...	Not exceeding 4 per district.	General purposes.
Woolwich Store Charge, No. 11.		
Glycerine ... ... lbs.	10 per cent.	For hydraulic pivots of B.L. barbette mountings.
Methylated spirits ... ... gals.	10 per cent.*†	For disappearing carriages.
Oil, mineral ... ... ,,	10 per cent.*†	Mountings and hydraulic buffers.
Soda, carbonate, dry ... grains	10 per cent.*†	For disappearing carriages.
Water, distilled ... ... gals.	10 per cent.*†	For disappearing carriages.
Woolwich Store Charge, No. 14.		
Connections, metal, indicator, pressure	1 per work of 10 guns or less	For connecting indicator with recoil cylinder, B.L., 10-in. and 9·2-in. Mark I, and 6-in. Marks II and IV, disappearing carriages.
Hand-spikes { common	15 per cent.	For all natures of guns.
Hand-spikes { metal roller, 7-ft., L.S. ...	10 per cent.	For all natures of guns.
Hand-spikes { wood roller, 6-ft.	10 per cent.	For all natures of guns.
Levers, pointed	5 per district	For R.M.L. guns.
Pins, pivot, band, elevating, with collar and key	2 per work of 10 guns or less	For elevating bands.
Trolleys, loading, 17·72-inch, wheels	2 per gun	
Washers, packing, connections, indicator, pressure (leather), set of 4 ... ... sets	2 per disappearing carriage	B.L., 10-in. and 9·2-in. Mark I, and 6-in. Marks II and IV.
Woolwich Store Charge, No. 16.		
Vent servers	10 per cent.	All natures of R.M.L. except axial-vented, and 9-in. on H.A. carriages.
Woolwich Store Charge, No. 18.		
Bags, extractor, projectile	1 per extractor	R.M.L. ordnance.
Blocks { loading tackle, No. ...	5 per cent.	R.M.L. guns.
Blocks { wood, Bothway, single, 8-in.	5 per cent.	For guns in emplacements with sunken ways and loading stages.
Brushes, piasaba, B.L., bore ...	1 per battery	For cleaning bore.
Extractors, projectile	2 per district	R.M.L. guns.
Heads { rammer, R.M.L.	2 per gun.	7-in. and over, except 10·4-in.
Heads { rammer and sponge ...	1 per 10·4-in. R.M.L.	
Heads { sponge, R.M.L.	2 per gun.	7-in. and over, except 10·4-in.

* To be kept mixed in casks ready for use in Royal Artillery charge. In addition to this the senior ordnance store officer will maintain a reserve of the various ingredients equal to 10 per cent., for 10-in. disappearing carriages (E and A), Mark II, 20 per cent., required by the Royal Artillery for filling H.P. cylinders and hydraulic buffers.

† For 10-in. disappearing carriages (E and A), Mark II, 20 per cent. is allowed.

Digitized by Google

Spare Stores allowed for working Guns which form the Armament of Districts, and for Magazines—*continued.*

Articles.	Proportion.	Remarks.
Woolwich Store Charge, No. 18—cont.		
Pulley, blocks, differential, 1-ton ...	1 per battery 10·4-in. R.M.L. gun	For use with wash-out apparatus.
Rammers	1 per gun	For B.L., R.B.L., and R.M.L. guns.
Ropes, guide, rammer	20 per cent.	For R.M.L. guns 9-in. and upwards.
Scrapers, ordnance, B.L., 6-in. to 13·5-in.	1 per 5 or less number of guns	6-in. to 12-in. B.L.
Selvagees, projectile	5 per cent.	B.L. 8-in. and upwards, and R.M.L. 9-in. and over.
Sponges { R.B.L.	1 per gun	7-in. to 20-pr.
Sponges { R.M.L.	1 per gun	All natures except 10·4-inch.
Staves { R.M.L., 17·72-inch ...	1 per gun	For brush, piasaba, rammer, and sponge.
Staves { end, B.L.	1 per work	B.L. 6-in. and upwards.
Tackles, loading { derricks... ...	1 per sub-district	Where required.
Tackles, loading { shields	1 per sub-district	Where required.
Tampeons	1 to 6 guns or less	For all natures of B.L. and R.M.L. guns.
Woolwich Store Charge, No. 20.		
Bags, burster	5 per cent.	B.L. and R.M.L. guns, to replace any found unserviceable when examining shells.
Woolwich Store Charge, No. 22.		
Batteries and keys, test and firing	1 per work for B.L. guns	For firing purposes.
Boxes, tube, garrison	10 per cent.	R.M.L. and R.B.L. guns.
Fuzes, time, wood	10 per cent.	For all natures of ordnance using wood time fuzes.
Lanterns, hand, magazine	1 per sub-district	Magazines.
Primers, vent piece	10 per cent.	For 7-inch and 40-pr. R.B.L. guns.
Tubes { friction, copper, solid drawn	10 per cent.	All natures except B.L., R.M.L. axial-vented, and 9-inch. Mark II.
Tubes { vent sealing { electric, P.	10 per cent.	All B.L. guns and R.M.L., 10·4-in, and 9-in. Mark VI.
Tubes { vent sealing { percussion ...	10 per cent.	All B.L. guns.
Tubes { vent sealing { electric, V. ...	10 per cent.	For R.M.L. 17-72-inch, 16-inch and 12·5-inch, Mark II.
Tubes { vent sealing { friction, V. ...	10 per cent.	For R.M.L. 17-72-inch, 16-inch and 12·5-inch, Mark II.
Woolwich Store Charge, No. 23.		
75 / 12 / 1964 **Caps**, lead, Armstrong base percussion fuze, 4·7-in. Q.F.*	As required	For replacing any caps that may be found damaged at inspection.

* Will not be required on the introduction of the "fuze, percussion, base, medium, No. 12."

Digitized by Google

Spare Stores allowed for working Guns which form the Armament of Districts, and for Magazines—*continued.*

Articles.	Proportion.	Remarks.	
Woolwich Store Charge, No. 24.			
Bottoms, shell { conical ... ... / cylindrical ... / hemispherical ... }	10 per cent.	For S.B. guns.	
Wads { fuze hole, G.S.	25 per cent.	Common shells, R.B.L. and R.M.L.	
Wads { loading hole, diaphragm ...	5 per cent.	S.B. ordnance.	
Woolwich Store Charge, No. 25.			
Lamps, magazine	1 to 20 lamps, or less number in a work	Magazines.	
Woolwich Store Charge, No. 28.			
Batteries, Le Clanché, firing, cells	1 cell per 3 batteries, or less in a district	For batteries used for illuminating cross-wires of Depression Range Finders and Position Finders.	75 Malta 7980
Lamps, electric, telescope {	1 per P.F. or D.R.F., where the electric light is installed.		57 Portsmouth 2485
leads, flexible, double strand, 2½ yards ...	1 per D.R.F.		

Digitized by Google

List of Spare Parts for Pump, Air, Double, Carriage, Garrison, Disappearing.

Spare Parts.	Proportion.	Remarks.
Keys, wrought-iron, split, round, loop head — plunger, large $\frac{1}{8}'' \times \frac{3}{4}''$	2 per pump.	
71 / 1 / 4170 — 0·2′ × $1\frac{1}{4}''$	1 per pump.	
Levers — iron socket (complete)...	1 per work.	
Levers — steel, rocking	1 per work.	
Plunger, metal, small	1 per work.	
Pins, steel, with collar and split key — lever, rocking ...	1 per pump.	
Pins, steel, with collar and split key — rod, connecting — plunger, upper...	1 per pump.	
Pins, steel, with collar and split key — rod, connecting — lever, socket ...	1 per pump.	
71 / 1 / 4170 **Pipes,** copper, delivery, with couplings	1 per pump.	
Springs, P.B. air...	1 per pump.	
Springs, P.B. suction valve water	1 per pump.	
Valves, metal — delivery — large...	1 per pump.	
Valves, metal — delivery — small...	1 per pump.	
Valves, metal — suction — air ...	1 per pump.	
Valves, metal — suction — water ..	1 per pump.	
Packing, leather, set of 19 sets	2 per pump.	

In tin case consisting of—	Diameters. Outer	Diameters. Of hole.	Depth.	Thickness.	No. to a Set.
	ins.	ins.	ins.	ins.	
Rings, leather, L section, plunger — large ...	$3\frac{3}{4}$	...	·7	·187	2
Rings, leather, L section, plunger — small ...	$1\frac{3}{8}$	·65	·5	·187	2
Washers, leather — cover, delivery valve	$1\frac{3}{4}$	$1\frac{1}{8}$	...	·187	2
Washers, leather — cover, connection pipes, connecting plug guide, water	$\frac{3}{4}$	...	...	·187	1
57 / Malta / 7936 — **Washers,** leather — suction valve ...	$2\frac{1}{8}$	$1\frac{3}{4}$	...	·187	2
Washers, leather — pipes, delivery ...	$\frac{3}{4}$	$\frac{5}{10}$	...	·187	4
Washers, leather — copper connecting	$\frac{3}{4}$	$\frac{5}{10}$	...	·187	6
			Total	...	19

Digitized by Google

LIST OF SPARE PARTS FOR PUMP, AIR, R.M.L., 6·6-IN. GUN.

Spare parts.	Proportions.	Remarks.
Keys, wrought iron, split, $\frac{3}{16}$-in.... ...	2	
round loop, head $\frac{7}{16}$-in.... ...	1	
Levers { rocking	1	
{ socket, complete	1	
Pins, steel, { lever, rocking... ...	1	
with collar { rod, connecting { upper	1	
and split { lower { large ...	1	per pump.
key { plunger { small ...	1	
Pipes, copper, delivery, with couplings...	1	
Plunger, metal, small	1	
Valves, metal { delivery { large	1	
{ small	1	
{ suction, air	1	
Packings, leather (set of 5) ... sets	2	
Consisting of:—		
Rings, leather, L { large	1	
section, plunger { small	1	
Washers, leather	3	

57 Ceylon 1087

SPARE PARTS OF DEPRESSION RANGE-FINDERS.

Spare Parts.	Proportions.	Remarks.
Diaphragms...	1 per instrument... ...	For local repairs by Instructor in Range-Finding or Inspector of Position-Finding.
Lamps, electric	1 ,, ,, ...	
Lock nuts for bubbles	4 ,, ,, ...	
Pins, adjusting	1 ,, ,, ...	
Screws, binding nuts, for switch and resistance coils	2 ,, ,, ...	

57 Vocab. 3756

Digitized by Google

LIST OF STORES USED IN CONNECTION WITH POSITION FINDING.

Designation.	Detail.
Apparatus, position-finding—	
Attachments, horizontal { Mark I.	With 1 movement.
" II.	With 2 movements.
Boards, terminal—	For leads—
A	From top of dial box.
B	From side of dial box.
C	From right side of single needle dial.
D	From left side of single needle dial.
E	From gun arm.
F (Mark I.)	From horizontal attachment, Mark I.; and horizontal transmitter, Mark I.
F (Mark II.)	From horizontal attachment, Mark II.; and horizontal transmitter, Mark II.
Boxes, dial—	With switch and relay—
A (Mark I.)	For dial, electric, range, A; and dial, electric, training, A, Mark I.
A (Mark II.)	For dial, electric, range, A,; and dial, electric, training, A, Mark II.
B	And two contact makers; for dial, electric, range, B; and dial, electric, training B.
C	Without switch and relay— For dial, electric, range, A; and dial, electric, training, A, Mark I.
Covers, position-finders—	Linen—
(Mark I.)	Without tapes, for position-finders, A, Mark I.; B, Mark I.; C, Mark I.; and D, Mark I.
(Mark II.)	With tapes, for position-finders, A, Mark II.; B, Mark II.; C, Mark II.; D, Mark II.
Dials—	
Single needle	With firing knob, in case.
Electric { range { A	With 1 hand.
range { B	Double action, with 2 hands.
training { A (Mark I.) ...	Small, with 1 hand.
training { A (" II.) ...	Large, with one hand, to show 180 degrees.
training { B	Double action, with 2 hands.
Gear { elevating, transmitting .	With chain and cam.
Gear { training, transmitting .	With cogwheel.
Plug, firing, safety	With firing plug, board, and cover.
Position-finders—	
A (Mark I.)	3 arm { gun arm reading less than 8,000
A (" II.)	2 " { yards
B (" I.)	3 " { gun arm reading 8,000 yards, but
B (" II.)	2 " { not 10,000 yards
C (" I.)	3 " { gun arm reading 10,000 yards.
C (" II.)	2 " {
D (" I.)	Scale, 300 yards to 1 inch ... ... { depression, C.O.
D (" II.)	Scale 3 inches to 1 mile ... ... { instruments.

Digitized by Google

List of Stores, &c.—*continued.*

Designation.	Detail.
Apparatus, position-finding—*contd.*	
Position-finding—*contd.*	
Balances, overhead—	(Not with position-finders, A, Mark I.; B, Mark I.; C, Mark I.; D, Mark I.)
(Mark I.)	Consisting of arm, weight, hook, and ball pivot.
(,, II.)	Consisting of jar, shot, rod, with 2 pieces of wire, hook, pulley, and fixed wheel.
Bed plate	With toothed arc, 3 levelling screws, and 3 feet for levelling screws.
Block, lay flap	For all position-finders, except D.
Board, bed plate	With or without xylanite, screwed to bed plate.
Bracket, gunmetal	For training stop } for all position-finders,
Bridge, iron	In one or 3 parts } except D.
Bubble, bed plate	With glass cover, 2 to each position-finder.
Finger, predicting	
Gun arm	With slider, 2 handles, leads, and pivot ... } For all position-finders, except D.
Height drum	
Lay flap	
Pencil holder	Old pattern or new pattern, with lever.
Reflector, porcelain	With arm, horizontal, for position-finder, when used as depression horizontal receiver.
Telescope	With bubble, cap, day and night eye-piece (no night eye-piece with D).
Telescope arm	With Y screws, 2 clips, and 2 keys for clips.
Telescope arm pivot	With adjustable screw, for setting to height.
Rack, gunmetal	With feet to fix to floor.
Relay, horizontal	For use with horizontal transmitter, Mark II.
Scales, predicting—	For position-finders of—
A	Scale 300 yards to 1 inch, used with R.M.L. guns.
B	Scale 300 yards to 1 inch, used with B.L. guns.
C	Scale 330 yards to 1 inch, used with R.M.L. guns.
D	Scale 330 yards to 1 inch, used with B.L. guns.
E	Scale 330 yards to 1 inch, used with 9-inch R.M.L. guns, Mark VI.A.
Switch, electric, B	For dial circuit.
Transmitters, horizontal—	With telescope—
(Mark I.)	With 1 movement.
(,, II.)	With 2 movements.
Bell, alarum, electric	For use with Ader telephone, No. 3.
Board, terminal, G	For telephones.
Boxes, battery—	For Le Clanché cells.
A	For 6 cells.
B	For 3 cells.

Digitized by Google

List of Stores, &c.—*continued.*

Designation.	Detail.
Cell, Le Clanché, large	6 block agglomerate, No. 829.
Blocks	Carbon rod, with 12 agglomerate blocks.
Jars	Earthenware.
Plates...	Zinc.
Dial, mechanical, A	For artificers.
Lamp, electric, telescope	For position-finders and depression range-finders.
Switch and resistance coil	
Switch, electric, A	For 2 telephones.
Telephone, Ader, { transmitter	
No. 3 ... ... { receiver	
Terminal, brass	For negative pole of battery.
Wire, cotton covered—	
No. C	Yellow, for lamp, electric, telescope.
„ H	Cable, firing, electric twin (Mark II.). For leads and lanyards.

N.B.—When demanding stores to complete, or to replace unserviceable stores, the exact description of position-finder for which they are required will invariably be quoted, and care will be taken that only those suitable for that particular instrument are demanded. When any parts of position-finders or dials are sent for repair, the number of the instrument will always be given.

Digitized by Google

38407
Equipt.
1899

3.—STAFF, AND SERVICE AND DEPOT COMPANIES.

CONTENTS.

	PAGE
Arms	682
Materials for Repair, Browning, and Cleaning of Arms	682
Ammunition	683
Accoutrements	683
Articles for Repair of Accoutrements	684
Signalling Equipment	684
Musical Instruments	685
Camp Equipment	686
Tools, Artificers, and Opening Packages	686
Miscellaneous Stores	686
Stores for Instruction in Electricity	687
Stores for Gun Drill	688
Stores for Gun and Repository Drills, and for General Instruction (Service Companies)	690
Stores for Laboratory Instruction	699
Army Books and Forms for Equipment	702

Digitized by Google

The Establishments of Garrison Artillery are published from time to time in Army Orders; and, being subject to change, they are not inserted in these Tables.

Arms.*

TABLE 1.	Proportions.
Weedon Store Charge.	
Carbines { Martini - Metford, Artillery, Mark III.	1 per company staff serjeant, serjeant, and rank and file.
Carbines { Martini-Henry, Morris' tube ...	2 per company for aiming tubes.
Sword-bayonets { patt. '88	1 per company staff serjeant, serjeant, and rank and file, and 1 spare per company.
Sword-bayonets { Martini-Henry carbine	1 per trumpeter.
Scabbards, sword-bayonet { patt. '88	1 per sword-bayonet, patt. '88.
Scabbards, sword-bayonet { Martini-Henry carbine	1 per trumpeter's sword-bayonet.
Protectors, front sight, Martini-Metford carbine, Artillery, Mark II. (and III.)	1 per carbine, and 3 spare per company.
Pull-throughs	1 per carbine, and 2 spare per company.
Reflectors, mirror†	3 per company.
Swords, staff serjeants, patt. '89, iron hilt...	1 per serjeant major, quartermaster serjeant, serjeant instructor of gunnery, orderly room serjeant, serjeant trumpeter, serjeant cook, canteen serjeant, and serjeant master tailor.
Scabbards, sword, staff serjeants, patt. '89	1 per staff serjeants sword.
Martini-Henry Carbine— *Appurtenances.*	
Tubes, aiming { brushes, cleaning ...	2 per company of Garrison Artillery. For Service and Depôt Companies.
Tubes, aiming { keys, Martini-Henry ...	
Tubes, aiming { rods, cleaning, Martini-Henry carbine	
Tubes, aiming { sights, fore, false, Martini-Henry carbine	

54 Artillery 2292

54 Arty. 3922

* Serjeant clerks to lieutenant-colonels will be armed and accoutred as serjeants of the company to which they are attached.

† For examining interior of barrels.

N.B.—Issues of D.P. carbines, with pull-throughs, sword-bayonets and scabbards, will be made for drill purposes to Royal Artillery Depôts on the authority of the General Officer Commanding, and according to local requirements.

Materials for Repair, Browning, and Cleaning of Arms.

As detailed in Appendix VIII., Part 1.

N.B.—Materials for repair and browning of arms are drawn by the depôt companies, except at stations where there are no depôt companies, in which case they are drawn by the Officer Commanding Royal Artillery in the district. *See* paragraph 6, Part 2.

Digitized by Google

Ammunition.

TABLE 2.	Proportions.
Gun.	
Rounds, for practice	*See* paragraphs 131 to 173.
Small-arm.	
Cartridges, small-arm — ball, Martini-Metford carbine — Service ...	20 rounds per carbine.
Cartridges, small-arm — ball, Martini-Metford carbine — Practice	According to Section V., Part I.
Cartridges, small-arm — blank, Martini-Metford	
Cartridges, aiming tube	

Accoutrements.

TABLE 3.	Proportions.
Woolwich Store Charge, No. 1.	
Belts* — pouch, buff, G.S.	1 per rank receiving staff serjeants' swords.
Belts* — waist — buff, V.E., patt. '82 ...	1 per company staff serjeant, serjeant, rank and file, trumpeter, and 1 spare per company.
Belts* — waist — warrant officers, Artillery	1 per rank receiving staff serjeants' swords.
Bottles — water, enameled	All ranks.
Bottles — zinc, oil	1 per carbine, and 2 spare per company.
Braces, buff, V.E., patt. '82 — serjeants and rank and file — left	1 per valise.
Braces, buff, V.E., patt. '82 — serjeants and rank and file — right ...	1 per valise.
Chapes, waist-belt, patt. '82	1 per company staff serjeant, serjeant, rank and file, and 2 per trumpeter.
Frogs, buff, bayonet, G.S.	1 per non-commissioned officer and man, except staff serjeants.
Knots, sword, buff, G.S.	1 per staff serjeants' sword.
Pouches — writing materials, Artillery ...	1 per warrant officer and staff serjeant.
Pouches — ammunition, buff, V.E., patt. '82.	1 per company staff serjeant, serjeant, and rank and file, and 1 spare per company.
Slings, carbine, buff, Artillery	1 per carbine.
Straps, buff — V.E., patt. '82 — great coat and mess tin	2 per valise, and 1 per rank receiving staff serjeants' swords.
Straps, buff — V.E., patt. '82 — supporting and mess-tin	2 per valise.
Straps, buff — water bottle	1 per water bottle.
Valises, patt. '82, japanned	All ranks except those receiving sergeants' swords.

38407 Equipt. 1463

* White enameled belts will continue in use until worn out.

Digitized by Google

Articles for Repair of Accoutrements.

TABLE 4. Annual Supply.	Per Company. Service.	Depôt.
Woolwich Store Charge, No. 1.		
Billets, pouch, buff, V. E. patt. '82	3	4
Buckles, brass: brace, ring barred	12	16
Buckles, brass: frog	2	3
Buckles, brass: strap V. E., greatcoat and mess tin	3	4
Buckles, brass: valise	12	16
Buckles, brass: waistbelt, V. E., patt. '82	2	3
Buckles, iron, valise	36	44
Buttons, leather, sling, buff	2	3
Dees, brass, pouch, V. E.	12	16
Loops, brass: valise	3	4
Loops, brass: waistbelt, V. E., triangular	4	6
Patches, leather: pouch, buff	12	16
Patches, leather: waistbelt, buff	12	16
Pieces, leather: black 2½ in. × ½ in. (for valise flap)	3	4
Pieces, leather: buff 5½ in. × ¾ in. (for sling)	39	48
Pieces, leather: buff 5½ in. × ¾ in. (for waist belt)	4	6
Pieces, leather: buff 4½ in. × 1⅛ in. (for pouch)	12	16
Pieces, leather: buff 4¼ in. × ¾ in. (for great coat and mess tin strap)	12	16
Pieces, leather: buff 3 in. × ¾ in. (for great coat and mess tin, and supporting and mess tin straps)	12	16
Safes, waistbelt, buff, infantry, S, and R. and F., patt. '82	3	4
Straps, black, V. E., patt. '82, valise	10	13
Straps, buff, frogs, G.S.	3	4

Signalling Equipment.

(*Referred to in paragraph* 250, *Part* 1.)

TABLE 5.	Per Set.	Remarks.
Woolwich Store Charge, No. 11.		
Bottles, tin, oil, with screw top, 2 quarts	1	
Oxygen mixture*	24† lbs.	
Woolwich Store Charge, No. 28.		
Apparatus, limelight*: Bags, gas	4	
Apparatus, limelight*: Bags, pressure	2	
Apparatus, limelight*: Bottles, cleansing gas	2	
Apparatus, limelight*: Cases, brass	2	
Apparatus, limelight*: Cases, iron	2	
Apparatus, limelight*: Cases, tin	2	
Apparatus, limelight*: Cylinders, lime pencils	2	
Apparatus, limelight*: Flasks	2	
Apparatus, limelight*: Lamps	2	
Apparatus, limelight*: Pencils	2	
Apparatus, limelight*: Retorts, copper, Mark III,	4	1 for each retort.
Apparatus, limelight*: spanners	4	
Books, signalling‡: Manual of Instruction	4	
Books, signalling‡: Message forms	4	Army Form 295 A. (1), with 2 sheets of carbon paper each.

Signallers 54 / 29

* Issued to certain stations where specially authorized.
† Twelve months supply.
‡ Supplied from the War Office on requisition.

Digitized by Google

Signalling Equipment.

	Table 5—*continued.*	Per Set.	Remarks.
54 Signallers 29	**Cans**, oil, feeding, Army signalling	1	
	Cards, test	25	
	Cases, message book	2	On waist belt.
	Cotton, waste lbs.	3†	
	Chests, signalling stores	1	
	Flags, signal, army: blue, 3 feet square	2	
	Flags, signal, army: blue, 2 „ „	2	
	Flags, signal, army: white, with stripe, 3 feet square	2	
	Flags, signal, army: white, with stripe, 2 „ „	2	
	Flags, signal, army: poles, 5 feet 6 inches	5	
	Flags, signal, army: poles, 3 „ 6 „	5	
51 Signallers 29	**Heliographs**, 5-inch‡	2	
	Keys, dummy, signallers	2	
	Lamps, bull's eye, signal with stand	4	
	Locks, pad, iron, small	1	
	Methylated spirits‡ ...pints	12§	
	Scissors, lamp	2	In addition, 2 are supplied to Malta for lime-light apparatus.
	Stands, telescope, signalling	2	
	Telescopes, signalling	2	
	Tubing, indiarubber, ⅜-inch‡ ...yards	10	
	Wheels, cypher	2	
	Wick ‖ common‡ lbs.	2§	
	Wick ‖ round 1½ inch ...yards	10†	
	Woolwich Store Charge, No. 29.		
	Oil, colza‖ ...pints	30†	

† Sufficient for 4 lamps for 150 hours. Classes using a greater or less number of lamps will draw in proportion.
‡ Issued to certain stations where specially authorized.
§ Twelve months supply.
‖ Supplied by Army Service Corps.

Musical Instruments.

TABLE 6.	Proportions.
Woolwich Store Charge, No. 29.	
Bugles	1 per serjeant trumpeter.
Trumpets	4 per service company at home and 8 per depôt company. 1 per trumpeter abroad.
54 Arty. 3341 **Strings**, bugle, Royal	1 per bugle and 1 per trumpet.
Pitch pipes	1 per serjeant trumpeter.
Tuning forks	

Drawing Instruments.

TABLE 6A.	Proportions.
54 Arty. 4662 *Woolwich Store Charge, No.* 29.	
Instruments, drawing—regimental schools	1 set per company.

Digitized by Google

Camp Equipment and Intrenching Tools.

Camp equipment and intrenching tools when required for camps, in time of peace, will be issued in the proportions laid down in Section VIII., Part 1.

Tools, Artificers, and Opening Packages.

TABLE 7.	Proportions.
Woolwich Store Charge, No. 7.	
Chests, tool, filled* No. 1 B.	2 per head-quarter station } In accordance with paragraph 245, Part 1.
„ 3 B.	3 „ „ „ }
„ 6 B.	}
„ 11 D.	} 1 „ „ „ }
„ 12 C. or D.	}
Chisels, ripping	1 per company } Opening packages.
Drivers, screw, G. S. 9-inch	1 „ „ }
Hammers, riveting, 24-oz.	1 „ „ }
Woolwich Store Charge, No. 8.	
Knives, laboratory	1 per company. Opening packages.

38407
Equipment
1523

* Devonport, Portsmouth, Sheerness, and Gibraltar will have a double supply of tools for the separate commands.

Miscellaneous Stores.

TABLE 8.	Per Company. Service.	Per Company. Depôt.	Remarks.
Woolwich Store Charge, No. 25.			
Boxes, schoolmasters	...	1	
Brushes, stencil	2	2	Marking valises.
Chests, R. A. records	...	6	
Handcuffs, common pairs	1	1	
Plates, stencil, paper	4	4	2 for marking back and 2 for front of valises.
Stamps brass or gunmetal on wood figures, 0 to 8, ½-in. sets	1	1	
letters 1 letter, ½-in.	...	...	As required.
letters 2 letter, ½-in. (R.A.)	1	1	
letters 3 „ ¼-in. (Dep.)	...	1	
steel for wood figures, 0 to 8, ½-in. sets	1	1	
letters 1 letter, ½-in.	...	...	As required.
letters 2 letter, ½-in. (R.A.)	1	1	
letters 3 „ ¼-in. (Dep.)	1	1	

Digitized by Google

57
Gen. No.
6390

Stores for Instruction in Electricity.*

(*Referred to in paragraph* 126.)

TABLE 9.	No.	Remarks.
Woolwich Store Charge, No. 11.		
Acid, sulphuric (dilute) ... ... lbs.	4	
Copper, sulphate of ... ... ,,	4	
Salammoniac, crushed ... ... ,,	7	
Woolwich Store Charge, No. 22		
Battery and key, test and firing (Mark II) ...	1	
Woolwich Store Charge, No. 28.		
Batteries: Daniell's, signalling (low resistance) cells.	2	
Batteries: Groves, cells, ebonite	2	
Batteries: ,, ,, porous	2	
Batteries: ,, connectors	2	
Batteries: ,, plates, platinum	2	
Batteries: ,, ,, zinc	2	
Batteries: Le Clanché, firing, single, cell ...	4	
Batteries: ,, testing ,, ,, ...	2	
Coils: resistance, 10,000 ohms	1	
Coils: resistance, 100 ohms, with key	1	
Coils: induction, small	1	
Condensers, one-third, Microfarad	1	
Fittings, test table: keys, reversing	1	
Fittings, test table: screws, connecting	12	
Galvanometers: detector, common, 100 ohms ...	1	
Galvanometers: ,, 3-coil	1	
Galvanometers: horizontal, 800 ohms	1	
Galvanometers: reflecting tangent (with shunts and case)	1	
Keys, firing, land service	1	
Lamps, electric, 2 c.p., 4-volts	1	
Magnets: electric, horse shoe, with movable cores	1	
Magnets: bar, steel, 8-in. ... ... pairs	1	
Woolwich Store Charge, No. 29.		
Wire: covered B 1 ... ...yards	50	
Wire: covered C 4 ... ... ,,	20	
Wire: uncovered, 14 B.W.G., copper ... ,,	50	
Telephones, for instruction†	1	
Books.		
Elementary Lessons in Electricity and Magnetism 1895 Edition (by Silvanus Thompson)	1	
Handbook of the Telephone (by Preece and Stubs)	1	
Manual of Electric Search Lighting (by Major Hippesley, R.E.)...	1	
Notes on Electricity for the use of Garrison Artillery (by Lieut.-Colonel Jocelyn, R.A.)	1	
Practical Electricity (by Ayrton)	1	

* Allowed to the following stations :—

Eastern District	1 Set.	Western District	1 Set.
South Eastern District ...	1 ,,	Cape of Good Hope	1 ,,
Southern District: Portsmouth ...	1 ,,	Gibraltar	1 ,,
Southern District: Isle of Wight ...	1 ,,	Malta	1 ,,
Thames District	1 ,,	St. Lucia	1 ,,
Cork ,, ...	1 ,,		

† Unserviceable Telephones, of any description available, will be supplied.

Digitized by Google

DRILL STORES.

To be accounted for in the returns of miscellaneous stores in possession of the head-quarters of Royal Artillery Districts.

Stores for Gun Drill.

(*Referred to in paragraph* 122.)

TABLE 10.	Proportions.
Woolwich Store Charge, No. 5.	
Brushes, water carriage	1 per gun for cleaning the projectile.
Woolwich Store Charge No. 14.	
Pumps, running back, carriage, garrison, B.L., 12-inch	1 per tier of guns. For running the gun back.
Woolwich Store Charge, No. 16.	
Ordnance, R.B.L. fittings — Blocks, breech, 40-pr. side closing, drill	1 per 40-pr. side closing gun, from which drill is carried on.
Ordnance, R.B.L. fittings — Pieces, vent, drill, 40-pr ...	1 per 40-pr. gun, with vent piece, from which drill is carried on.
Rifle, aiming, Ewart — Bands*	2
Rifle, aiming, Ewart — Barrels, rifle	1
Rifle, aiming, Ewart — Links, trigger	1
Rifle, aiming, Ewart — Levers, vent	1
Rifle, aiming, Ewart — Cord, firing...	1
Tube, aiming — M.H. rifle	1 Per gun:—B.L. 5-in. and 4-in.; R.B.L. 7-in. to 20-pr.; R.M.L. 7-in. to 16-pr. and 13-pr. to 9-pr.; where specially authorised.
Tube, aiming — brush, cleaning	1
Tube, aiming — Key, M.H.	1
Tube, aiming — rod, cleaning rifle	1
Woolwich Store Charge, No. 22.	
Lanyards, friction tube, siege, No. 1† ...	1
Woolwich Store Charge, No. 18.	
Cases, cartridge, No. 4	2 per gun, 80, 64, and 40-pr. R.M.L., and 40-pr. R.B.L.
Extractors, drill shell — 8-in. to 12-in., B.L.	1 per gun, 8-in. to 12-in.
Extractors, drill shell — 6-in., B.L.	1 per 6-in. gun.
Tackles, gun	*See* Equipment for 6·6-in., 80, 64 and 60-pr. R.M.L. guns; also for R.B.L. guns.
Woolwich Store Charge, No. 20.	
Cartridges — drill	Sufficient cartridges to make up *one full* charge for all guns, and 1 spare to every 5 of each nature supplied.
Cartridges — drill, Q.F — 4·7-inch	1 per gun and 1 spare to every 5 guns of each nature.
Cartridges — drill, Q.F — 6-pr.	
Cartridges — drill, Q.F — 3-pr.	
Cases, powder, cylindrical, Z‡	2 per 17·72 in. R.M.L. gun.

59 Gen. No. 6043

67 Ports. 2875

57 G. No. 5039

57 L'pool. 589

* Special to each description of gun.
† Only to be demanded where such lanyards are not already on charge.
‡ Unserviceable articles, if complete and sufficiently good for drill purposes, and of latest pattern, may be supplied.

Digitized by Google

Stores for Gun Drill—*continued.*

	TABLE 10—*continued.*	Proportions.
57 D'port 4612	**Cylinders,** cartridge { B.L.	4 per 12-in. and 10-in., 2 per 9·2-in. and 8-in., and 1 per 6-in. gun.
57 G. No. 3193	{ R.M.L.	4 per 16-in., 2 per 12·5-in. and 10·4-in., and 1 per 12-in. to 7-in.
	Lubricators, drill, dummy { 7-inch	1 per drill cartridge.
	{ 40-pr.	1 ,, ,, ,,
	Woolwich Store Charge, No. 22.	
	Composition, priming	2 oz. (in glass bottle) per work, where electric P and V tubes are used for drill—for re-priming the tubes.*
	Primers, vent piece, drill	2 per 7-in., and 40-pr. (except 40-pr. side closing) R.B.L. guns, from which drill is carried on.
57 G. No. 3331	**Tubes** { friction, drill	1 per gun from which drill is carried on, and 1 spare to 5 such guns. Also 1 per aiming tube.
	{ vent sealing { electric, P, drill ...	25 per gun, 6-in. to 13·5-in. B.L. Also for R.M.L. 10·4-in. and 9-in. Marks VI a, VI b, VI c.
	{ electric, V, drill ...	50 per 17·72-in., 25 per 16-in., and 12·5-in. Mark II. R.M L. guns.
	{ friction, V, drill ...	2 per 17·72 in., 16-in., and 12·5-in. Mark II. R.M.L.
	{ percussion, drill ...	3 per gun, 12-inch to 4-inch B.L.
57 D'port 4512	*Woolwich Store Charge, No.* 24.	
	Gas checks, R. M. L.	2 per 17·72-in., and 1 per gun for all other natures taking gas-checks.
57 L'pool 589	**Plugs,** fuze-hole, drill, G.S.	1 per gun from which drill is carried on and 1 spare to 5 such guns.
	Shells, empty, common†	2 per 17·72-in. R.M.L., and for other natures, B.L. and R.M.L., 1 per gun from which drill is carried on.
57 G. No. 3331	**Shells,** Q.F., drill, 4·7-inch	1 per gun from which drill is carried on.
	Woolwich Store Charge, No. 28.	
	Wire, platinum silver (21 grains per yard)	6 inches per electric drill tube, for re-bridging the tube after each time of firing. *Vide* para. 130, Part 2, and Appendix XII.‡
	Woolwich Store Charge, No. 29.	
	Range-finders, depression, Mark I. ...	1 per Gunnery Instructor, for instruction of R.A.

* P tubes take 2 grains, V tubes 3½ grains.

† With guns for which "Drill Shells" have been approved, these latter will be used instead of the service shells.

‡ About 1 inch of the platinum silver wire required for each tube, and each tube should stand repairing about 20 times.

Digitized by Google

Stores for Gun and Repository Drills, and for General Instruction. (Service Companies.)

(*Referred to in paragraph* 124.)

TABLE II.	No.	Remarks.
Woolwich Store Charge, No. 2.		
Axes, pick { heads	2	} Required when erecting light sheers.
{ helves	2	
Mauls, iron, hoop	8	
Posts, picket, 5 feet ... ... {	6	
{	36	Holdfasts for light sheers.
Shovels, universal	4	Required when erecting light sheers.
Tent, mallets	6	
Woolwich Store Charge, No. 4.		
Carts, sling	1	
Wagons, sling, 6 tons	1	
Woolwich Store Charge, No. 5.		
Brushes, water, carriage	4	For cleaning projectiles.
Woolwich Store Charge, No. 7.		
Hammers, claw, 28-oz....	2	
Woolwich Store Charge, No. 8.		
Pincers, carpenters ... ...pairs	1	
Prickers, cartridge	1	
Spanners, McMahon, 15-inch	1	
Spikes, marline, iron, 12-inch	12	
Woolwich Store Charge, No. 10.		
Filters, hydraulic, jack...	1	
Frames, store, hydraulic jack, G.S....	1	
Jacks, lifting { hydraulic G.S., 10 tons	2	
{ screw, Clerk's	1	
Pad frame, store, hydraulic jack	1	Per hydraulic lifting jack.
Slings, chain, 12 to 25 tons { breech	1	
{ muzzle	1	
Thimbles, sheers, 5-inch rope...	3	For light.
Woolwich Store Charge, No. 11.		
Grease, Field's ... ...kegs	1	
Paint, lead, red ... ... lb.	1	

57
820
3687

57
Portsmouth
2069

57
Gen. No.
6433

Digitized by Google

Stores for Gun and Repository Drills, and for General Instruction. (Service Companies)—*continued.*

TABLE 11—*continued.*	No.	Remarks.
Woolwich Store Charge, No. 12.		
Timber, spars for sheers and derricks { 40 feet by 13 inches mean diam.	2	For sheer legs.
{ 25 feet by 7 inches	1	For derrick.
{ 30 feet by 9 inches...	1	
Woolwich Store Charge, No. 13.		
Lithographs, coloured, small (tube, electric, No. 10)	1	
Woolwich Store Charge, No. 14.		
Buckets, sponge, garrison	3	
Capstans, crab	1	
Carriages, garrison, R.M.L. 64-pr., 58 cwt., common, wood	4	
Cylinders, recoil, steel, 6-inch, B.L., disappearing carriages, Mark IV.	1	
Gyns, triangle, with appurtenances { heavy ...	1	
{ light ...	1	
Handspikes, common { 7 feet	16	
{ 6 feet	40	
Levers { 14 eet	2	
{ 12 ,, ...	2	
Pedestals, carriage, garrison, common, R.M.L., 64-pr., 58 cwt.	4	
Wagons, platform	1	
Woolwich Store Charge, No. 15.		
Boxes, grease, 3-lbs.	1	
Woolwich Store Charge, No. 16.		
Ordnance, S.B. guns { 68-pr., 95 cwt.	1	For elementary instruction.
{ 32-pr., 58 cwt.	2	If available.
Plugs, vent...	2	
Prickers, vent, 12-inch...	2	
Spikes, gun { common	1	
{ spring	1	
Vent Servers (with lanyard)	2	
Woolwich Store Charge, No. 17.		
Boxes, obturating pads, 5-inch	1	
Extractors, tube { vent sealing	1	
{ V. M.	1	
{ P.	1	
{ P. special	1	

Digitized by Google

Stores for Gun and Repository Drills, and for General Instruction. (Service Companies)—*continued.*

TABLE 11—*continued.*	No.	Remarks.
Woolwich Store Charge, No. 17—continued.		
Ordnance, B.L., 5-inch, Mark III.: bolts, stop	1	
Ordnance, B.L., 5-inch, Mark III.: boxes, slide	1	
Ordnance, B.L., 5-inch, Mark III.: discs, pad, obturating, adjusting	2	
Ordnance, B.L., 5-inch, Mark III.: discs, pad, obturating, protecting sets	1	
Ordnance, B.L., 5-inch, Mark III.: locks, percussion	1	
Ordnance, B.L., 5-inch, Mark III.: pads, obturating	1	
Ordnance, B.L., 5-inch, Mark III.: rings, carrier	1	
Ordnance, B.L., 5-inch, Mark III.: screws, breech	1	
Ordnance, B.L., 5-inch, Mark III.: vents, axial	1	
Ordnance, B.L. fittings: locks, electric, B	1	
Ordnance, B.L. fittings: locks, percussion, D	1	
Ordnance, B.L. fittings: wrenches, firing mechanism	1	
Ordnance: R.M.L. 64-pr., 58 cwt	2	For drill and shifts.
Ordnance: S.B.B.L., 32-pr., fittings		
Ordnance: Cups, obturating, large	1	
Rimers, vent, axial	1	
Woolwich Store Charge, No. 18.		
Blocks, wood, Bothway, single, 12-inch	1	
Blocks, wood, Bothway, single, 8-inch	2	For erecting light sheers.
Blocks, wood, Bothway, double, 12-inch	1	
Blocks, wood, Bothway, double, 8-inch	2	For erecting light sheers
Blocks, wood, double, 12-inch (in parts)	1	
Blocks, wood, treble, 12-inch	2	For erecting light sheers.
Blocks, wood, Snatch, 12-inch	2	
Blocks, wood, Snatch, 15-inch	2	
Brushes, piasaba, R.M.L. 80-pr.	2	
Caps, sponge, No. 8	2	
Cases, cartridge, No. 4	4	For 80, 64, and 40-pr. R.M.L. and 40-pr. R.B.L. guns.
Cordage, hawser, 3-strand, tarred, 4½-inch fathoms	113	In two half-coils for guys. For light sheers.
Cordage, hawser, 3-strand, tarred, 2½ ,,	113	For general purposes.
Cordage, hawser, 3-strand, tarred, 2½ ,,	113	In two half-coils for runners. For light sheers.
Cordage, hawser, 3-strand, tarred, 2¼ ,,	75	In three lengths of 25 fathoms. For light sheers.
Cordage, hawser, 3-strand, tarred, 1½ ,,	113	For general purposes.
Cordage, hawser, 3-strand, tarred, 1 ,,	48	For anti-twisters. For light sheers.
Cordage, hawser, 3-strand, white, 4 ,,	113	For main tackle. For light sheers.
Cordage, hawser, 3-strand, white, 4 ,,	25	For head lashing of sheers. For light sheers.
Cordage, spun yarn lbs.	2	
Cordage, spun yarn lbs.	12	For making selvagees.
Gaskets, crab, capstan	2	
Rammers, R.M.L. 64-pr.	2	

Digitized by Google

Stores for Gun and Repository Drills, and for General Instruction. (Service Companies)—*continued.*

TABLE 11—*continued.*	No.	Remarks.
Woolwich Store Charge, No. 18—continued.		
Ropes { drag, heavy ... ... pairs	8	
Ropes { parbuckling, 18 fathoms, 4-inch... ...	4	
Selvagees, ordinary	4	
Slings, rope { 6-inch, 12 feet long	5	For light sheers.
Slings, rope { 6 ,, 5 ,, ,, ...	1	
Slings, rope { 5 ,, 5 ,, ,, ...	1	
Slings, rope { 4 ,, 5 ,, ,, ...	1	
Sponges, R.M.L., 64-pr., wood stave, 58 cwt. ...	2	
Tackles { luff, 14 fathoms	5	
Tackles { whip upon whip	2	
Tampeons, R.M.L. 80-pr.	2	
Twine, whipping... ... ... lb.	1	
Wadhooks, S.B., 8-inch gun	2	
Woolwich Store Charge, No. 19.		
Planks, moving guns { half { 6-ft. × 12-in.... ...	8	
Planks, moving guns { half { 4 ,, × 12 ,, ...	4	
Planks, moving guns { whole { 10 ,, × 17 ,, fir ...	12	
Planks, moving guns { whole { 10 ,, × 17 ,, oak ...	6	
Rollers, ground { 6 ft. × 10 in. diameter ...	4	
Rollers, ground { 3 ,, × 6 ,, ,, ...	4	
Rollers, ground { 2 ,, × 5 ,, ,, ...	3	
Rollers, ground { 14 in. × 5 ,, ,, ...	2	
Scotches { large	20	
Scotches { medium	30	
Scotches { small	30	
Shoes, sheer { for feet of sheers	2	
Shoes, sheer { for foot of derrick	1	
Skids { 20 ft. × 15 in. square	2	
Skids { 20 ,, × 9 ,, ,, ...	2	
Skids { 6 ,, × 12 ,, ,, ...	10	
Skids { 5 ,, × 6 ,, × 5 in.	4	
Skids { 4 ,, × 12 ,, square	10	
Skids { 3 ,, × 9 ,, × 6 in.	8	
Skids { 3 ,, × 6 ,, square	8	
Skids { 3 ,, × 6 ,, × 3 in....	8	
Skids { 3 ,, × 5 ,, × 4 ,, ...	8	
Skids { dismounting { 14 ft. × 8 in. square ...	8	
Skids { dismounting { 10 ,, × 8 ,, × 13 in. ...	1	
Woolwich Store Charge, No. 20.		
Bags, burster { B.L., common, 6-inch { cast-steel (dowlas) ...	1	
Bags, burster { B.L., common, 6-inch { iron (serge)	1	
Bags, burster { R.M.L., common { 64-pr., Mark III. (dowlas) ...	1	
Bags, burster { R.M.L., common { studded, 9-inch, iron (serge)	1	
Bags, burster { R.M.L., common { studless, 9-inch { (serge) ...	1	
Bags, burster { R.M.L., common { studless, 9-inch { (silk cloth)	1	
Cartridges, drill, R.M.L. 64-pr., 8 lbs.	2	
Cases, powder, 100 lbs.	1	

Digitized by Google

Stores for Gun and Repository Drills, and for General Instruction. (Service Companies)—*continued.*

TABLE II—*continued.*	No.	Remarks.
Woolwich Store Charge, No. 20—continued.		
Charcoal alder ground	1	Specimen of each in bottles.
Charcoal alder whole	1	
Charcoal dogwood ground	1	
Charcoal dogwood whole	1	
Saltpetre rough	1	
Saltpetre refined	1	
Sulphur, refined	1	
Woolwich Store Charge, No. 21.		
Gunpowder, specimens in glass bottles: E.X.E.	1	About 2 ozs. in bottle.
L.G.	1	
M.G.[1]	1	
P.	1	
S.P.	1	
P.[2]	1	
Prism[1], black	1	
Prism[2]	1	
Prism[1], brown	1	
Q.F.[1]	1	
R.F.G.	1	
R.F.G.[2]	1	
R.L.G.	1	
R.L.G.[2]	1	
R.L.G.[4]	1	
S.B.C.	1	
Rifle pistol	1	
Woolwich Store Charge, No. 22.		
Adapters, shell rifled	1	
Adapters, shell S.B.	1	
Batteries and keys, test and firing	1	
Boxes tube, garrison	2	
Boxes Vesuvian matches	1	
Composition, priming ... ozs.	2	2 ozs. (in glass bottle), per work where electric P and V tubes are used for drill; for re-priming the tubes.*
Cups, R.B.L. guns 7-inch	1	
Cups, R.B.L. guns 40-pr.	1	
Cups, R.B.L. guns 40-pr. side closing	1	
Cylinders, detonator, No. 8, for 8 Siege Artillery, Mark II.	1	
Extractors, tin, cup cross head	1	
Extractors, tin, cup hook	1	
Fuzes, unserviceable, time, wood	100	
Lanyards, friction tube, garrison No. 1	1	
Lanyards, friction tube, garrison ,, 2	1	
Lanyards, friction tube, garrison ,, 3	2	

* P tubes take 2 grains, V tubes 3½ grains.

Digitized by Google

Stores for Gun and Repository Drills, and for General Instruction. (Service Companies)—*continued.*

TABLE 11—*continued.*	No.	Remarks.
Woolwich Store Charge, No. 22—continued.		
Straps, tube box, long	2	
Tubes friction, drill	3	
Tubes vent-sealing, electric, P. drill	1	
Tubes vent-sealing, electric, V. ,,	1	
Tubes vent-sealing, friction, V. ,,	1	
Tubes vent-sealing, percussion ,,	1	
Woolwich Store Charge, No. 23.		
Cartridges, Q.F. Adapters	1	
Cartridges, Q.F. 6-pr. common shell, Mark III.	1	
Cartridges, Q.F. 6-pr. shell, Mark III.	1	
Cartridges, Q.F. 3-pr. common shell, Mark II.	1	
Cartridges, Q.F. 3-pr. shell, Mark II.	1	
Cartridges, Q.F. 4·7-inch empty	1	
Cartridges, Q.F. 4·7-inch ,, lids	1	
Cartridges, Q.F. 4·7-inch ,, wads, felt	1	
Cartridges, Q.F. 4·7-inch ,, ,, millboard	1	
Cartridges, Q.F. saluting 6-pr. cases, Mark III.	1	
Cartridges, Q.F. saluting 6-pr. wads, felt, Mark III.	1	
Cartridges, Q.F. saluting 3-pr. cases, cartridge, Mark II.	1	
Cartridges, Q.F. saluting 3-pr. wads, felt, Mark II.	1	
Cartridges, Q.F. parts of 6-pr. shell, steel, Mark III.	1	
Cartridges, Q.F. parts of 3-pr. shell, steel, Mark III.	1	
Shells, Q.F., empty, 4·7-inch common, iron	1	
Shells, Q.F., empty, 4·7-inch common, forged steel	1	
Shells, Q.F., empty, 4·7-inch Shrapnel	1	
Clips, cartridge, Q.F. 6-pr.	1	
Clips, cartridge, Q.F. 3-pr.	1	
Woolwich Store Charge, No. 24.		
Discs, base plug large	1	
Discs, base plug small	1	
Gaschecks, R M.L. 9-inch automatic, Mark I.	1	
Gaschecks, R M.L. 9-inch ,, ,, II.	1	
Gaschecks, R M.L. 9-inch Mark ,, I.	*1*	
Gaschecks, R M.L. 9-inch ,, II.	1	
Gaschecks, R M.L. 6·3-inch	1	
Gaschecks, R M.L. 40-pr.	1	
Implements, fuze and shell, nut, 7-inch	1	
Implements, spanners, gas-check plug, 6·3-inch	1	
Shells, R.M.L., empty, common, 64-pr.	2	
Shot, R.M.L. case, 80-pr.	1	With removable lid.
Shot, R.M.L. Palliser 9-inch, studless	1	
Shot, R.M.L. Palliser 9-inch, for gas-check	*1*	
Strips, augmenting, B-L., 6-inch	6	
Wads fuze hole common	2	
Wads fuze hole R.B.L. sockets	2	
Wads wedge 9-inch	1	
Wads wedge 8-inch	1	

Digitized by Google

Stores for Gun and Repository Drills, and for General Instruction. (Service Companies)—*continued.*

TABLE 11—*continued.*	No.	Remarks.
Woolwich Store Charge, No. 25.		
Boards, black, musketry instruction	1	
Chalk, prepared, white... ... ...boxes	1	
Compasses, chalk	1	
Easels, musketry instruction...	1	
Pointers, 6 feet	1	
Rulers, flat, lancewood, 3 feet	1	
Woolwich Store Charge, No. 27.		
Check, cotton ... ... yards	6	For dusting blackboards.
Woolwich Store Charge, No. 28.		
Bags, guncotton, waterproof, 2 lb.	1	
Woolwich Store Charge, No. 29.		
Boards, drawing, antiquarian	1	
Clinometers, Watkin	1	
Indicators, range	1	
Instruments, drawing, regimental schools ...	1	
Range-finders, depression	1	
Rods, measuring, common, 6 feet	1	
Scales, mathematical, No. 3, Marquoi	1	
T Squares, 36-inch	1	
Tapes, measuring, 50 feet	1	
Thermometers, common	1	
Thermometers, wet and dry bulb, common ...	1	
Wire, covered, B. 6 ... ... yards	*100*	
PATTERNS FOR INSTRUCTION.		
Woolwich Store Charge, No. 21.		
Guncotton ... dry primers, one perforation, 1¼-in × 1¼ in.	1	
Guncotton ... wet slabs, unperforated, 6⅛-in. × 6⅛-in. × 1¼-in.	1	
Woolwich Store Charge, No. 22.		
Boxes, sections of fuzes...	1	
Detonators, dummy, No. 8 whole	1	
Detonators, dummy, No. 8 section	1	
Fuzes, for instruction electric, No. 14	1	
Fuzes, for instruction percussion base, Armstrong, No. 9	1	
Fuzes, for instruction percussion „ Hotchkiss	1	
Fuzes, for instruction percussion direct action No. 3	1	
Fuzes, for instruction percussion direct action delay. No. 10	1	
Fuzes, for instruction percussion Pettman G.S., No. 5	1	
Fuzes, for instruction percussion Pettman land, No. 6	1	
Fuzes, for instruction percussion R.L., No. 7	1	
Fuzes, for instruction percussion small, No. 8	1	

57
Ports
3098

Digitized by Google

Stores for Gun and Repository Drills, and for General Instruction. (Service Companies)—*continued.*

TABLE 11—*continued.*	No.	Remarks.
PATTERNS FOR INSTRUCTION—*continued.*		
Woolwich Store Charge, No. 22—continued.		
Fuzes, for Instruction — time — Armstrong E, No. 22	1	
sensitive — long, No. 23	1	
sensitive — middle, No. 24	1	
15 secs. — M.L. — No. 41	1	
15 secs. — M.L. — special priming, No. 42	1	
15 secs. — with detonator, No. 43	1	
and percussion — middle, No. 54	1	
and percussion — shot, No. 55	1	
electric, No. 14	1	
Fuzes, sections — percussion — base — Armstrong, No. 9	1	
base — Hotchkiss	1	
direct action — B.F., No. 3	1	
direct action — delay, No. 10	1	
Pettman — G.S. — B.F., No. 5	1	
Pettman — G.S. — A.F., No. 5	1	
Pettman — Land — B.F., No. 6	1	
Pettman — Land — A.F., No. 6	1	
R.L. — B.F., No. 7	1	
R.L. — A.F., No. 7	1	
small — B.F., No. 8	1	
small — A.F., No. 8	1	
time — Armstrong E, B.F., No. 22	1	
sensitive — long — B.F., No. 23	1	
sensitive — long — A.F., No. 23	1	
sensitive — middle — B.F., No. 24	1	
sensitive — middle — A.F., No. 24	1	
15 seconds — M.L. — No. 41	1	
15 seconds — M.L. — special priming, No. 42	1	
15 seconds — with detonator, No. 43	1	
and percussion — middle — B.F., No. 54	1	
and percussion — middle — A.F., No. 54	1	
and percussion — short — B.F., No. 55	1	
and percussion — short — A.F., No. 55	1	
Matches, Vesuvian box	1	
Primers, vent piece — drill	1	
Primers, vent piece — section	1	
Tubes, for instruction, whole — electric, No. 10	1	
friction, copper — L.S. — long	1	
friction, copper — L.S. — short	1	
friction, copper — solid drawn	1	
friction, copper — 7-pr.	1	
vent, sealing — electric — P	1	
vent, sealing — electric — V	1	
vent, sealing — friction, V	1	
vent, sealing — percussion	1	
Tubes, for instruction, section — electric, No. 10	1	
friction, copper — L.S. — long	1	
friction, copper — L.S. — short	1	
friction, copper — solid drawn	1	
friction, copper — 7-pr.	1	
vent, sealing — electric — P	1	
vent, sealing — electric — V	1	
vent, sealing — friction, V	1	
vent, sealing — percussion	1	

Digitized by Google

Stores for Gun and Repository Drills, and for General Instruction. (Service Companies)—*continued.*

TABLE 11—*continued.*	No.	Remarks.
PATTERNS FOR INSTRUCTION—*continued.*		
Woolwich Store Charge, No. 23.		
Cartridges, Q.F. primers, electric, large whole	1	
Q.F. primers, electric, large section	1	
Q.F. 4·7-inch, drill	1	
Shells, filled, section R.B.L., 40-pr., segment	1	
Shells, filled, section R.M.L. 7-inch common	1	
Shells, filled, section R.M.L. 7-inch Shrapnel	1	
Shells, filled, section R.M.L. 2·5-inch ring	1	
Shells, filled, section R.M.L. 2·5-inch Shrapnel	1	
MODELS.		
Woolwich Store Charge, No. 2.		
Models, boards, knots, 2 ft. 8 in. × 4 ft. 9 in.	1	For model knots.
Models, timber, spars, ? or shears and derricks 17 ft. 6 in. × 6 in. dia.	2	
Models, timber, spars, ? or shears and derricks 12 ,, 6 ,, × 4 ,, ,,	1	
Models, timber, spars, ? or shears and derricks 7 ,, 6 ,, × 2½ ,, ,,	1	
Woolwich Store Charge, No. 10.		
Thimbles, sheers	4	
Woolwich Store Charge, No. 14.		
Capstans, crab (with bars)	1	To be made locally.
Woolwich Store Charge, No. 18.		
Blocks, wood Bothway 4½-inch single	2	
Blocks, wood Bothway 4½ ,, double	2	
Blocks, wood Bothway 4½ ,, treble	2	
Blocks, wood rope, strapped 3-inch double	2	
Blocks, wood rope, strapped 3 ,, treble	2	
Blocks, wood snatch, 4½-inch	6	
Cordage, white, 1½-inch fathoms	113	For model sheers.
Cordage, white, 1 ,, ,,	60	
Gaskets, crab, capstan	2	
Lines, Hambro' skeins	1	
Selvagees, ordinary	12	To be made up locally.
Slings, gun (of sorts) white rope	8	To be made up locally.
Woolwich Store Charge, No. 19.		
Planks, whole, 2½-ft. × 4¼-in. × ¾-in.	10	To be made up locally.
Shoes, sheers (of sorts)	3	To be made up locally.
SPECIMENS.		
Woolwich Store Charge, No. 18.		
Cordage, hawser, 3-strand, 3 ft. long tarred 9-inch	1	To be provided locally.
Cordage, hawser, 3-strand, 3 ft. long tarred 7½ ,,	1	To be provided locally.
Cordage, hawser, 3-strand, 3 ft. long tarred 7 ,,	1	To be provided locally.
Cordage, hawser, 3-strand, 3 ft. long white 12-inch	1	To be provided locally.
Cordage, hawser, 3-strand, 3 ft. long white 9 ,,	1	To be provided locally.
Cordage, hawser, 3-strand, 3 ft. long white 7½ ,,	1	To be provided locally.
Cordage, hawser, 3-strand, 3 ft. long white 7 ,,	1	To be provided locally.
CLEANING MATERIALS FOR LECTURE ROOM STORES.		Gibraltar 1279
Bricks, bath	4	57
Leathers, chamois	3	Gibraltar
Linen, old lbs.	8	Annual supply. 4583
Oil, Rangoon pints	1	57
		Portsmouth 3399

N.B.—A few additional Drill Stores have been specially allowed to Gibraltar, also School of Instruction, Golden Hill, Isle of Wight.

Digitized by Google

Stores for Laboratory Instruction.

(Referred to in paragraph 123 and Appendix IV.)

TABLE 12.	Proportions.	Remarks.
Woolwich Store Charge, No. 8.		
Needles, magazine, nickel silver, 4-in.	10 per set.	
Scissors, magazine	1 per set.	
Woolwich Store Charge, No. 11.		
Paint, red, Venetian, prepared	1 lb. per set	For marking shells.
Woolwich Store Charge, No. 13.		
Lithographs, coloured, small, R.L. (of all fuzes, both sections and complete mentioned in this table)		
Plates, stencil, brass	1 per set....	For marking shells.
Woolwich Store Charge, No. 20.		
Apparatus, filling, cartridge, B.L. 9·2-inch, 41½-lb.	1 per set.	
Bags — blowing charges, common, shell	6 per set.	
Bags — burster	10 per common shell ...	According to calibre of shell supplied.
Bags — powder barrel, waterproof...	2 per set.	
Barrels, powder, whole ...	2 per set.	
Beans, black	2 sacks (6 bushels) per set.	To represent R.L.G. powder.
Bearers, cartridge cylinder ...	1 per set.	
Braid, silk or worsted	As required for making up cartridges.	
Cartridges — B.L., empty, 9·2-in., 41½-lb.	20 per set ...	Or such available cartridges as can be readily procured of, approximately, the calibre given. The bags should be used over and over again till worn out, the chokes and ends of braid not being cut off.
Cartridges — R.B.L., empty, 40-pr., 5 lb.		
Cartridges — R.M.L., empty, 9-in., 50 lb. ...		
Cartridges — R.M.L., empty, 64-pr., 8¼ lb. ...		
Cases, metal-lined, powder, whole	1 per set.	
Cases, powder, Keys		
Cubes, wood	Sufficient to fill the 20 cartridges, and 25 per cent. spare.	Representing P. powder.
Cylinders — carriage paper, B.L. 9·2-in. ...	2 per set ...	Or according to cartridge available.
Cylinders — carriage paper, R.M.L. 9-in....		
Cylinders — carriage paper, R.B.L, 7-in., 11-lb.	20 per set.	
Lubricators, service, 40-pr.	1 per cartridge.	
Prisms, wood	500; 10 per cent. to be black.	To represent Prism powder.

Digitized by Google

Stores for Laboratory Instruction—*continued.*

TABLE 12—*continued.*	Proportions.	Remarks.
Woolwich Store Charge, No. 20—continued.		
Seed, rape	¼ bushel per set. ...	To represent F.G. powder.
Silk, twist	As required for making up cartridges.	
Sockets, cartridge	20 per set.	
Worsted, white, No. 14... ...	As required for making up cartridges.	
Woolwich Store Charge, No. 21.		
Bags, primer, filled, 7 drams, dummy	2 per set.	
Woolwich Store Charge, No. 22.		
Boxes, section of fuzes	1 per set.	
Funnels, cartridge	1 per set.	
Fuzes, time, wood (complete, unserviceable).	50 annually to each company for instruction in boring.	
Fuzes, for instruction — percussion — base — Armstrong, No. 9 Hotchkiss, Mark II	Head-Quarter Stations of Artillery 1 set for every two companies. Out-stations, 1 set.	
Fuzes, for instruction — percussion — B.L., plain, No. 2 ...		
Fuzes, for instruction — percussion — direct-action — No. 3, Mark II		
Fuzes, for instruction — percussion — direct-action — No. 3, Mark III ...		
Fuzes, for instruction — percussion — direct-action — delay, No. 10, Mark II ...		
Fuzes, for instruction — percussion — Pettman's G.S., No. 5		
Fuzes, for instruction — percussion — R.L. No. 7		
Fuzes, for instruction — percussion — small, No. 8, Mark IV		
Fuzes, for instruction — time — Armstrong E. No. 22 sensitive, middle, No. 24		
Fuzes, for instruction — time — 15-secs. — M.L. No. 41 withdetonator, No. 43		
Fuzes, for instruction — time — and percussion, short, No. 55, Mark IV		
Fuzes, sections, percussion — base — Armstrong, No. 9 Hotchkiss, Mark II		
Fuzes, sections, percussion — B.L., plain, No. 2 ...		
Fuzes, sections, percussion — direct-action — No. 3, Mark II		
Fuzes, sections, percussion — direct-action — No. 3, Mark III ...		
Fuzes, sections, percussion — direct-action — delay, No. 10, Mark II		
Fuzes, sections, percussion — Pettman's G.S., No. 5		
Fuzes, sections, percussion — R.L. No. 7		
Fuzes, sections, percussion — small, No. 8		

57
Genl. No.
4414

Digitized by Google

Stores for Laboratory Instruction—*continued.*

TABLE 12—*continued.*	Proportions.	Remarks.
Woolwich Store Charge, No. 22—continued.		
Fuzes, sections, time: Armstrong E, No. 22 sensitive, middle, No. 24	Head-Quarter Stations of Artillery 1 set for every two companies. Out-stations, 1 set.	
Fuzes, sections, time: 15-secs. M.L. No. 41 withdetonator, No. 43 and percussion, short, No. 55		
Implements, fuze and shell: Drifts, G.S.	1 per set.	
Implements, fuze and shell: Drivers, screw, Shrapnel, large.		
Implements, fuze and shell: Funnels, shell, copper, small.		
Implements, fuze and shell: Keys, fuze, and plug, G.S.		
Implements, fuze and shell: Keys, fuze, universal		
Implements, fuze and shell: Mallets, common ...		
Implements, fuze and shell: Pincers, Shrapnel primer.	2 per set.	
Implements, fuze and shell: Rods, filling shell, large	1 per set.	
Implements, fuze and shell: Rods, filling shell, small		
Implements, fuze and shell: Scrapers, shell, 42-in. ...		
Implements, fuze and shell: Scrapers, shell, 32-in. ...		
Implements, fuze and shell: Scrapers, shell, 20-in. ...		
Ladles, luting		
Luting	As required.	
Pots, melting luting	1 per set.	
Primers, dummy ...	5 per set.	
Shrapnel shell, section	5 per set.	
Scoops, powder	1 per set.	
Tubes, for instruction: whole, V.S. electric, No. 10	1 per set.	
Tubes, for instruction: whole, V.S. electric P. percussion		
Tubes, for instruction: section, V.S. electric, No. 10	1 per set.	
Tubes, for instruction: section, V.S. electric P. percussion		
Woolwich Store Charge, No. 24.		
Shells, B.L., empty, common	2 per set ...	For each nature of gun from which drill is carried on.
Shells, R.M.L., empty, common		
Shells, empty, Shrapnel ...		
Wads, fuze-hole, G.S.	10 per common shell.	
Woolwich Store Charge, No. 25.		
Brushes, paint, sash tool, No. 4	1 per set	For marking shells.

57
Gen. No.
3552

Digitized by Google

TABLE 13. Army Books and Forms for Equipment.

Army No.	Subject.	Description.	Books
Books.			
242	Equipment	Account Ledger, Depôt Company.	
242		Account Ledger, Service Company.	241
108		Temporary receipt and issue vouchers.	10
Forms.			
G 829	Materials for repairing Arms ...	Requisition and receipt and issue voucher.	
G 805	Ammunition gun and rocket for practice.	Requisition.	
G 804	Ammunition, blank for reviews		
G 815	,, small-arm, practice and exercise.		
G 957	Materials for repairing accoutrements.	Requisition and receipt and issue voucher.	
L 1377	School books and materials...	Requisition.	
O 1756	Industrial School materials...		
G 997	Equipment in general, *blank*	Requisition.	
G 1033		Receipt and issue voucher.	
G 1049		Expenditure, transfer and conversion voucher.	
P 1925		Expense voucher.	
G 1027	Materials for repair in general ...	Requisition.	
G 980	Stores	Carrier's Note.	
F 754		Convoy Note.	
G 968	Camp Equipment	Requisition.	
G 973	... ...	Account (*temporary use*).	
B 79	Practice	Company Report.	
B 93		Range ,,	
B 269	,, (Station)	Annual ,,	

Digitized by Google

4.—ROYAL ARTILLERY REGIMENTAL DISTRICT STAFF, DISTRICT ESTABLISHMENTS, SCHOOL OF GUNNERY, R.A. STAFF CLERKS, R.A. BAND, ROYAL MALTA ARTILLERY, BERMUDA MILITIA ARTILLERY AND LOCAL COMPANIES OF ROYAL ARTILLERY.

064
525

CONTENTS.

	PAGE
Arms	704
Materials for Repair, Browning, and Cleaning of Arms	705
Ammunition	705
Accoutrements	706
Articles for Repair of Accoutrements	707
Musical Instruments	707
Saddlery, Universal	707
Stable Necessaries	708
Materials for Repair of Saddlery	708
Signalling Equipment	710
Tools, Opening Packages	710
Stores for Marking, and Handcuffs	710
Veterinary Stores	710
Army Books and Forms for Equipment	710

Digitized by Google

The Establishments are published from time to time in Army Orders; and, being subject to change, they are not inserted in these Tables.

TABLE 1.	Proportions.
R. A. Mounted Band.	
HORSES.	
Band Master	1
Mounted Band	42 Aldershot and Woolwich.
SADDLERY.	
Universal, sets	43

Arms.

TABLE 2.	Proportions.
Weedon Store Charge.	*District Establishment, School of Gunnery, Royal Malta Artillery, Bermuda Militia Artillery, and Local Companies of Royal Artillery.*
Carbines { M.M., Artillery, Mark III. ...	All ranks except buglers and trumpeters, and those receiving staff serjeants swords.
Carbines { Martini-Henry Morris tube	2 per company for aiming tubes.
Sword-bayonets { patt. '88	All ranks except band, trumpeters, and those receiving staff serjeants swords.
Sword-bayonets { Martini-Henry carbine	1 per trumpeter.
Scabbards, sword-bayonet { patt. '88	All ranks except band, trumpeters, and those receiving staff serjeants swords
Scabbards, sword-bayonet { Martini-Henry carbine	1 per trumpeter.
Protectors, front sight, M.M. carbine. Artillery, Mark II and III.	1 per carbine.
Pull-throughs	1 per carbine.
Reflectors, mirror*	3 per company.
Tubes, aiming { Martini-Henry carbine ... brushes, cleaning, Martini-Henry keys, Martini-Henry ... rods, cleaning, Martini-Henry carbine sights, fore, false, Martini-Henry carbine	2 per company for Royal Malta Artillery, Bermuda Militia Artillery, and local companies of Royal Artillery.
Pistols { Webley	1 per native officer, Local Companies Royal Artillery
Pistols { ,, rods, cleaning, L.S. ...	1 per pistol.
Swords, staff-serjeants, patt. '89, iron hilt	1 per native officer, Local Companies Royal Artillery†.
	1 per warrant officer, master gunner, staff serjeant, range serjeant, laboratory serjeant, serjeant photographer, staff clerk, and serjeant cook.
Scabbards, sword, staff serjeants, patt. '89	1 per staff serjeants sword.

064
525
54
Arty.
3922

* For examining interiors of barrels.

† The sword is issued free to native officers of Local Companies Royal Artillery, and may be taken away by them on retirement.

Digitized by Google

TABLE 2—*continued.*	Proportions.
Weedon Store Charge—continued.	*Regimental District Staff.*
Sword-bayonets, Martini-Henry carbine **Scabbards,** sword-bayonet, Martini-Henry carbine	All ranks except band, and those receiving cavalry and staff serjeants swords.
Swords { cavalry patt. '90	1 per serjeant of mounted band.
Swords { drummers	1 per serjeant, corporal, and musician, dismounted band.
Sword, staff serjeants, patt. '89, iron hilt ...	1 per warrant officer, master gunner, staff serjeant, and serjeant cook.
Scabbards, sword { cavalry patt. '85, Mark II. ...	1 per cavalry sword.
Scabbards, sword { drummers	1 per drummers sword.
Scabbards, sword { staff serjeants, patt. '89 ...	1 per staff serjeants sword.

Materials for Repair, Browning and Cleaning of Arms.

As detailed in Appendix VIII., Part 1.

The Arms of the District Establishments and School of Gunnery are repaired and browned under paragraph 336, Part 1. Those of the Royal Malta Artillery, in the same manner as for Garrison Artillery.

Ammunition.

TABLE 3.	Proportions.
Gun ammunition	District Establishments. *See* para. 169. Royal Malta Artillery, Bermuda Militia Artillery, and local companies of Royal Artillery as for garrison Artillery.
Cartridges, aiming tubes	Royal Malta Artillery, Bermuda Militia Artillery, and local companies of Royal Artillery according to Section V., Part 1.
Cartridges, small-arm { ball, ·303 { Service	20 rounds per carbine.
Cartridges, small-arm { ball, ·303 { Practice ...	As for Garrison Artillery (para. 151, Part 1), except School of Gunnery, which requires none.
Cartridges, small-arm { blank, ·303	

Digitized by Google

Accoutrements.

TABLE 4.	Proportions.
Woolwich Store Charge No. 1.	
Belts, pouch, buff, G.S.*	1 per native officer local companies of Royal Artillery.†
	1 per rank receiving staff serjeants swords.
	1 per serjeant, corporal and musician, mounted band.
Belts, shoulder, brown, sword	1 per drummers sword.
Belts, waist, brown, pistol, cavalry ...	1 per native officer local companies of Royal Artillery.
Belts, waist, buff, cavalry, patt. '85, O.R. ...	1 per serjeant, corporal, and musician, mounted band.
Belts, waist, buff, V.E. patt. '82, G.S.	1 per company staff serjeant, serjeant, havildar, rank and file, and trumpeter.
Belts, waist, buff, warrant officers, Artillery*	1 per native officer local companies of Royal Artillery.†
	1 per rank receiving staff serjeants swords.
Bottles, water, enamelled	All ranks except for regimental district staff.
Braces, buff, V.E., patt. '82, left	1 per valise.
Braces, buff, V.E., patt. '82, right	
serjeants and rank and file	
Cases, pistol	1 per native officer local companies of Royal Artillery.
Chapes, waist belt, patt. '82	1 per serjeant, havildar, rank and file, and 2 per bugler and trumpeter.
Frogs, black, R. A. band	1 per drummers sword.
Frogs, buff, bayonet, G.S.	1 per sword bayonet.
Knots, sword, buff, cavalry, line, O. R. ...	1 per cavalry sword.
Knots, sword, buff, G.S.	1 per native officer local companies of Royal Artillery.†
	1 per staff serjeants sword.
Lanyards, pistol	1 per native officer local companies of Royal Artillery.
Pouches, writing materials, Artillery ...	1 per native officer local companies of Royal Artillery,† and 1 per rank receiving staff serjeants swords.
Pouches, ammunition, buff, V.E., patt. '82	1 per serjeant, havildar, and rank and file.
Pouches, ,, pistol	1 per native officer local companies of Royal Artillery.
Slings, carbine, buff, Artillery	1 per carbine.
Straps, buff, V.E., patt. '82, great coat and mess tin ...	2 per valise, and 1 per rank receiving staff serjeants swords.
Straps, buff, V.E., patt. '82, supporting and mess tin...	2 per valise.
Straps, buff, water bottle	1 per water bottle.
Valises, patt. '82, japanned	All ranks except those receiving cavalry and staff serjeants swords.

* White enamelled belts will continue in use until worn out.

† These articles are issued free to native officers of local companies of Royal Artillery, and may be taken away by them on retirement.

N.B.—The portion of the R. A. band at Woolwich which performs mounted duties is provided with a mounted set of accoutrements in addition to the dismounted set.

Digitized by Google

Articles for Repair of Accoutrements.

Supplied as for Garrison Artillery so far as actually required.

See Table 4, p. 684.

Musical Instruments.

TABLE 5.	Proportions.
Woolwich Store Charge No. 29.	
Bugles ... } **Trumpets** }	1 per bugler local companies of Royal Artillery, and trumpeters Royal Malta Artillery and Bermuda Militia Artillery. 5 for School of Gunnery.
Strings, bugle, Royal	1 per bugle and 1 per trumpet.

Saddlery, Universal.

TABLE 6.	No.	
HARNESS AND SADDLERY.		
Woolwich Store Charge No. 5.		
Collars, head, R.A.	43	
Ropes, head, cotton	43	
Woolwich Store Charge No. 6.		
Bits bridoon	46	1 per set of saddlery and 3 spare.
Bits ,, Chains	3	Spare.
Bits portmouth saddlery, with bridle head and reins	43	
Bits portmouth Chains, curb	5	Spare.
Bits portmouth Hooks, curb	5	Spare.
Blankets, saddle	43	For steel arch saddle or iron arch when hair pannels are exhausted.
Breastpieces	43	
Cases cloak	43	
Cases horseshoe, saddlery	86	
Cruppers, saddlery	—	A proportion not exceeding 8 per cent. of riding horses.
Girths, leather, patt. '84	43	
Irons, stirrup, G.S.	86	
Leathers, stirrup	86	
Numnahs, felt	43	
Pannels* "iron arch" saddles, universal ... pairs	43	
Pannels* numnah	—	As may be ordered.
Reins, bridoon	43	
Runners, brass, stirrup leather	86	
Saddles, "iron arch" *or* "steel arch," universal ...	43	
Skins, sheep, saddlery, patt. '84, Hind	43	

* Until store is exhausted; then blankets, saddle, and numnah-pannels, as may be ordered.

Digitized by Google

Saddlery, Universal—*continued.*

TABLE 6—*continued.*	No.	
Woolwich Store Charge No. 6—continued.		
Straps: baggage	129	
Straps: shoe case	86	
Straps: cloak and wallet	86	
Straps: cloak centre	43	
Straps: girth	—	4 per set of saddlery not fitted with V-attachment, and 12 spare.
Straps: supporting front	86	
Straps: supporting rear	43	
Straps: trace	86	
Surcingles, leather, harness	43	
Traces, saddlery ... pairs	43	
Tugs, trace	86	
Wallets, "iron arch" *or* "steel arch," saddles, universal ... pairs	43	

Stable Necessaries.

TABLE 7.	Proportions.
Woolwich Store Charge No. 5.	
HARNESS AND SADDLERY.	
Bags: corn, 2 bushels	1 per horse.
Bags: nose, G.S.	1 per horse.
Brushes: harness, hard	1 per pair of horses.
Brushes: horse	1 per horse. Supplied yearly on 1st April.
Combs, curry	1 per mounted kit.
Pickers, hoof	1 per horse every 5 years.
Scissors, trimming ... pairs	1 per horse. Supplied yearly on 1st April.
Sponges, G.S.	

Materials for Repair of Saddlery.

TABLE 8.	Annual supply.	Remarks.
HARNESS AND SADDLERY.		
Woolwich Store Charge No. 6.		
Basils, brown, strained*	2½	
Bosses: bit	3	
Bosses: breastplate	3	
Buckles: brass, roller: single, ¾-inch†	6	
Buckles: brass, roller: double, ¾-inch	5	
Buckles: iron, roller: 1¼-inch, double, head collar	4	
Buckles: iron, roller: barred, 1¼-inch, curved (stirrup leather)	4	
Buckles: iron, roller: double, 1-inch	4	
Buckles: iron, roller: ,, ¾-inch	7	
Buckles: iron, roller: single, 1¼-inch	4	

*For hair pannels only.
† For new pattern cloak and wallet straps, &c.

Digitized by Google

Materials for Repair of Saddlery—*continued.*

TABLE S—*continued.*	Annual supply.	Remarks.
Woolwich Store Charge No. 6—continued.		
Buckles, iron, tinned — roller — $1\frac{3}{4}$-inch	2	
roller — $\frac{7}{8}$-inch	2	
inlet — $1\frac{1}{4}$-inch	2	
inlet — $\frac{3}{4}$-inch	9	
Burrs, copper	9	
Dees, iron, tinned, $2\frac{1}{4}$-inch	1	
Eyelets, nose bag	7	
Felt — brown, 43 inches wide†	$1\frac{1}{4}$	
Felt — cuttings ... lbs.	$5\frac{1}{4}$	
Hair, horse, saddlery ... lbs.	—	7 lb. per 25 pairs of hair pannels.
Hides, brown — backs — bridle	$\frac{1}{2}$	
Hides, brown — backs — collar	1	
Hides, brown — cloak	$\frac{1}{2}$	
Hides, brown — shoulders	$\frac{1}{2}$	
Rings, iron — $1\frac{1}{4}$-inch, slight	2	
Rings, iron — 1 ,,	8	
Saddle-trees — Flaps, universal ... pairs	2	
Saddle-trees — Seats, universal	3	
Serge, collarmakers ... yds.	—	$2\frac{1}{4}$ yards for 25 p on charge. Or cutting $4\frac{1}{2}$ lbs.
Skins, sheep	$1\frac{1}{2}$	
Squares, iron	2	
Studs — wallet	6	
Studs — brass, breastplate, patt. '84	5	
Studs — sword, frog	4	
Thread — black, 3-cord ... lbs. ozs.	0 8	
Thread — flax, fine ,,	2 0	
Thread — whited-brown ,,	0 8	
Twine, quilting ,,	—	$\frac{1}{2}$ oz. per pair pannels hair.
Web — diaper, 2-inch yds.	3	
Web — straining ,,	6	
Woolwich Store Charge No. 10.		
Nails, steel cut, tacks, No. 197 ... lbs.	$1\frac{1}{2}$	
Screws, iron, flathead — $\frac{3}{4}$-inch, W.G., No. 10	10	
Screws, iron, flathead — $\frac{7}{8}$-inch, ,, No. 9	10	
Woolwich Store Charge No. 11.		
Dubbing ... lbs.	$32\frac{1}{4}$	
Flour ... ,,	$\frac{3}{4}$	
Ink, marking ... pints	1	
Oil, rape ... ,,	$21\frac{1}{2}$	
Soap — yellow ... bars	$107\frac{1}{2}$	
Soap — soft ... ,,	21	
Wax — bees ... ozs.	4	
Wax — black ... lbs.	1	
Woolwich Store Charge No. 27.		
Linen, unbleached (for repair of nose bags and corn-bags) ... lbs.	$9\frac{3}{8}$	

57
Dover
2929

† When cuttings are not available, felt in the piece will be issued in the proportion of 1 yard felt to 5 lbs. cutting.

Digitized by Google

Signalling Equipment.

(For Royal Malta Artillery only.)

Supplied as for Garrison Artillery.

Tools, Opening Packages.

TABLE 9.	Proportions.
Woolwich Store Charge No. 7.	
Chisels, ripping	1 per R.A. District for District Establishments, and 1 per local company of Royal Artillery (Hong Kong and Mauritius per 2 companies). For opening packages.
Drivers, screw, general service, 9-inch	
Hammers, riveting, 24-oz.	
Woolwich Store Charge No. 8.	
Knives, laboratory	

Stores for Marking and Handcuffs.

TABLE 10.	Proportions.
Woolwich Store Charge No. 25.	
Brushes, stencil	2 per R.A. District for District Establishments, and 2 per local company of Royal Artillery (Hong Kong and Mauritius per 2 companies). Marking valises.
Handcuffs, common ... ... pairs	1 per local company of Royal Artillery (Hong Kong and Mauritius per 2 companies).
Plates, stencil, paper	4 per R.A. District for District Establishments, and 4 per local company of Royal Artillery (Hong Kong and Mauritius per 2 companies). 2 for marking back and 2 for front of valises.
Stamps	As for Garrison Artillery as far as applicable.

Veterinary Stores.

(Referred to in paragraph 264, Part 1.)

TABLE 11.	Six Months Supply.
Woolwich Store Charge No. 2.	
Blankets, horse, brown	2
Pads, surcingle...	2 } Not required for Mark II. horse
Surcingles, web, cavalry	2 } blanket.

Army Books and Forms for Equipment.

Supplied as for Garrison Artillery.

Digitized by Google

INDEX TO SECTION XII.

GARRISON ARTILLERY.

	Para.	Page.
A.		
Accountants, direct correspondents	258	
Accounts, Store—		
accountant	249	
agreement with actual receipts and issues	268	
,, ,, vocabulary of stores	268	
ammunition to be taken on charge	255A	
artillery, district, how kept	5	
balancing and transmission of	257	
certificate as to consumable articles	255, 263	
correspondence connected with	258	
demands for stores	259	
exchanges of component parts of guns, mountings, &c., how shown	264	
expendible stores not taken on charge	255	
forms for	250	
fuze-hole plugs	254	
gas checks, how charged and accounted for	252, 253	
gunpowder, half-yearly returns	269	
headquarters staff, and staff clerks' equipment	6	
instructions for keeping ledgers, applicable generally	248	
kept by the master gunner or N.C.O. in charge	257	
materials for repairs, or preservation not taken on charge	255	
miscellaneous stores	250	
models, &c., for instruction, not shown in....	256	
scope of	251	
separate account for each work or group of works	250	
special, for certain stations	265–267	
stores for experimental purposes taken on charge	262	
stores issued in sets, accounting for	268	
verification of stock on transfer of charge	261	

Digitized by Google

	Para.	Page.
Accoutrements	—	683, 706
articles for repair	—	684, 707
warrant officers, district establishments, armament artificers	7	
Adapters, filled shell, coated with red lead	222A	
Ammunition, gun—		
armaments, cartridges and shells kept filled	80	
,, insufficient accommodation for, report of	84	
,, machine gun	79	
,, movable	79, 119	
,, proportions to be maintained	79	
,, ,, in forts where magazines are near other buildings	81	
,, S.B., proportions to be maintained filled	82	
,, ,, loose powder for	83	
practice, bags for bursters, disposal of	190	
,, cartridge covers, disposal of	190	
,, company, allowance of, or money equivalent	163	
,, ,, allowance for elementary instruction of young soldiers....	170	
,, ,, allowance for district establishments	169	705
,, ,, allowance for Royal Malta Artillery	168	705
,, ,, allowance for local companies R.A.	168	705
,, ,, allowance for detachment at St. Helena	168	
,, ,, common shells, plugged	172	
,, ,, ,, ,, to represent shrapnel	172	
,, ,, competitive practice at schools of instruction	164	
,, ,, not allowed for siege practice	171	
,, regimental, allowance for W.I. regiments	153	
,, ,, companies at Shoeburyness	154	
,, ,, projectiles, natures used	156, 157	
,, ,, proportions	150	
,, ,, ,, local companies, R.A.	152	
,, ,, ,, Royal Malta Artillery ...	152	
,, ,, ,, Q.F. guns	158	
,, station, blank for....	140	
,, ,, ,, charges used....	142	
,, ,, paper shot, when to be used	140, 141	

Digitized by Google

	Para.	Page.
Ammunition, gun—*continued*—		
practice, station, projectiles, natures used	139	
,, ,, proportions, B.L., disappearing	136	
,, ,, ,, 17·72-inch and 16-inch	138	
,, ,, the three rounds to fired on same day	143	
,, siege, money allowance for	161	
,, position-finding, allowance of	174	
,, schools of instruction, money allowance for	165	
,, ,, ,, remaining at end of year carried forward to next year	133	
,, allowance for Infantry at Malta and Gibraltar	166	
,, for Infantry at St. Lucia	167	
,, cartridges to be filled by R.A. in certain cases....	186	
,, ,, of mixed lots of powder, blending for practice	187	
,, demands for, to replace....	185	
,, ensuing year's requirements, statement to be furnished	177	
,, expenditure of	132	
,, filled shells, bursting charge to be drowned	186	
,, full allowance to be expended each year	132	
,, money value allowed	132, 150, 163, 170	
,, oldest used first	186	
,, Q.F., fuzes not to be extracted	184	
,, ,, fired strictly as service ammunition	184	
,, shells, filled with coal dust	183	
,, ,, ,, water	181, 182	
,, ,, filled, when used to be prepared by R.A.	186	
,, ,, to be used, selection of	186	
,, ,, shrapnel, with fixed primers, fired over sea ranges only	186	
,, spare tubes and primers allowed	188	
,, and exercise, militia and volunteers, provided in R.A. estimates	44	
blank, for reviews and field days	196	
cartridges for equipment, where made up	192	
newest to be returned to store	49	
salutes and signal guns supplied at public charge	197	
taken on charge in the accounts	255	
transfer from laboratory to batteries	193	
Ammunition, small-arm	—	683, 705

Digitized by Google

	Para.	Page.
Appendices, lists of	—	185
Arcs—		
elevating, B.L. { degrees for quadrant elevation, graduation of	575	
elevating, B.L. { disappearing carriages	574	
,, attachment of	443, 444	
,, refilling graduations	433	
traversing, adjustment of	525	
,, charge of, and accounting for	104	
,, demands for	102	
,, graduations, numbering of	106	
,, patterns of	105	230, 231
Armament District, definition of	71	
Armaments—		
ammunition for	79	
changes by G.O.C. on emergency	58	
increase, or changes in, approved by Secretary of State for War	45	
inspection, joint, record of, by R.A. and R.E.	61–64	
new, requisition for	47	
new, testing	60–62	
proposals for new, or alterations	3	
return, joint R.A. and R.E.	65, 66	
Secretary of State fixes	58	
Arms	—	682, 704
materials for repair, browning, cleaning	—	682, 705
warrant officers and N.C.O. district establishments	7	
Army Forms and Books—		
Armaments	—	451
Companies	—	702, 710
Artificers, Armament. [*See* **Armament Artificers.**]		
B.		
Bags, burster for shells, disposal of	190	
Barrels—		
empty, serviceable hoops to be replaced on	51	
not to be stripped of wooden hoops	52	
Batteries—		
grouping of batteries	74	
signification of, in regard to supplies	73	
supplies to	73	
Beds, howitzer, and component parts of	484	620–641
Boats, for towing targets, estimate for	207	
Books—		
army, list of, for armaments	—	451
,, ,, for companies	—	702, 710
text and hand, proportions and distribution of	218	

Digitized by Google

	Para.	Page.
Bores, Gun. [*See also* **Inspection of Ordnance.**]		
kept in order by R.A.	283	
lacquered after annual practice	191	
„ when not in use	282	
lacquer for, table of quantities	—	148–150
preservation of	273	
Boxes, schoolmasters'	—	686
B.L. Guns—		
equipment, details	—	296–311
gun, component, spare parts and fittings	—	454–465
carriages, component and spare parts	—	476–519
slides „ „	—	520–542
Breech Fittings. [*See* **Inspection of Ordnance.**]		
Breech Screw. [*See* **Inspection of Ordnance.**]		
Brushes, Stencil, marking valises	—	686, 710
Buffers, Hydraulic—		
B.L., disappearing mountings, instructions for	488	
„ mountings, oil, for filling, quantities	486	
caps, wrought iron, fitted with	480	
circular, 64-pr. gun....	479	
connecting to carriage	457, 458	
„ „ siege travelling	466	
„ to slides....	475, 481	
cylinders, emptied and cleaned out every twelve months	516	
examination of before firing or drill	516	
filling mode of	459, 476, 482, 544	
leakage, mode of remedying	517	
materials for packing	—	229
oil drippings from, not to be used	518	
packing for transport	530	
piston rod disconnected where guns are hard to run back	97	
R.M.L., 12·5-in. and 12-in., and H.A. mountings, instructions for	488	
temporarily emptied in works under repair	97	
to be kept filled and connected to carriage	97	
Bugles and Strings	—	685, 707

C.

Calcium, chloride of, cases not to be opened till required	641	
Camp Equipment	—	686
Carriages, Garrison—		
cleaning and painting biennially	271	
„ „ where exposed to sea spray, &c.....	271	

Digitized by Google

	Para.	Page.
Carriages, Garrison—*continued*—		
examination, before periodical painting	272, 533	
in possession of militia and volunteers, preservation of	224	
marking of, for movable armament and siege companies....	219	
preservation, inspection, &c.	221	
„ stores for, annual allowance	222	
spare parts, charge of	69D	
„ details of	—	476–519
care and preservation	487–526	
B.L., overhaul before periodical painting	520	
brake gear, differential, regulating of	505	
buffers and gear, instructions for	488	
cleaning working parts monthly	491	
compressor gear, regulating of	510	
„ „ to be kept free from rust	507	
defective or deficient parts to be renewed ...	521	
degree scales of index plate, &c., adjustment of	525	
elevating gear, tightening up jamming levers and friction cones....	506	
friction gear, cleaning and oiling	504	
gear, removed and cleaned before periodical painting	519, 520	
„ in exposed works, fittings removed and placed in store	489	
„ fittings placed in position once in three months	489	
„ removal or adjustment of, care to be taken....	499	
inspection, periodical, arrangement for ...	523	
„ „ report of, I. O. M.	523	
instructions in regard to preservation to be hung up in the work	526	
levers, adjusting, setting up after firing ...	508	
lubricating holes, cleaned out and filled with oil	512	
„ „ positions of	512	
„ „ list of, hung up in each work	512	
„ working parts, monthly	491, 492	
marks, &c., quoted in correspondence	522	
nuts, oiled before replaced	498	
position, shifted when not in use	495	
precautions before firing or drill	497	
preventor gear, care taken in replacing	509	
„ to be kept free from rust	507	
racers, cleaning	502	
roller axles, cleaning, &c.	500, 513	

Digitized by Google

	Para.	Page.
Carriages, Garrison—*continued*—		
care and preservation—*continued*—		
screws, oiled before replaced....	498	
toothed wheels and pinions to be greased	514	
trucks, removal and replacing	500	
memorandum of examination	435–439	
„ „ information to be recorded on	436–438	
packing for transport	527–532	
painting. [*See also* **Painting**]	537–541	
„ quantities of paint required	—	153–154, 165–167
„ time and working pay for	—	157–159, 176
„ where paint is rubbed off to be repaired	490	
scraping, preparatory to painting	533–536	
„ implements to be used	535	
„ rust, clogged oil, &c., to be thoroughly removed	534	
„ time and working pay for	—	157–159, 176
disappearing....	562–622	
bright parts greased	618	
care and preservation—general directions	606–622	
„ „ constant attention to be paid to....	606	
cut off chain, adjustment of	572	
cylinder, air in, release of	578	
„ cleaning out, yearly	611	
„ cleanliness necessary	608	
„ filling, mode of	569	
„ kept filled and under working pressure	609	
„ liquid for, nature and quantity of....	566–567	
„ working pressures to be obtained....	570, 571	
elevating arcs and pinions, putting together	574	
„ „ tightening to prevent slip	576	
„ bands, position of	583	
„ „ distance of pivot from trunnions	583	
„ gear, taken to pieces every six months	616	
erection, placing mounting in position	564	
friction brake, to test working of	617	
„ cones, slightly oiled to prevent scoring	617	
gauge pressure....	626	
guides, elevating arc, graduations for quadrant elevation	575	

Digitized by Google

	Para.	Page.
Carriages, Garrison—*continued*—		
disappearing—*continued*—		
gun and shield, mounting of	573	
indicator connections, attachment of, to filling cock	568	
indicators, pressure, spring	625	
leakage, dealt with before firing	580	
„ of pressure	610	
„ ram gland, discovery of	602	
„ recoil cylinder, remedy for	596	
„ „ valve, removal of liquid to examine, &c.	595	
„ signs of, parts liable to	592-594	
leathers, spare, preservation of	612	
„ „ supply not to run low	612	
lifting loops for raising cylinder covers, &c.	599	
liquid for cylinders, composition of	566	
„ „ quantity of	567	
lowering gun, mode of	579	
metal joints, holding pressure, position of	622	
packing, description and use	598	
„ hydraulic, gland or cylinder, renewal of	597	
„ „ position and sizes	620	
„ in contact with liquid	621	
„ ram gland, testing of	603	
preservation of	608	
pump, air, double, service of	623	
„ lowering, packing of	604	
„ „ renewing lead washer of gland	604	
„ adjustment of packing for leakage	605	
racers and rollers, examination and cleaning	562-564	
raising the gun, preparations and precautions for	577	
„ and pumping down, weekly	607	
ram, to detach from crosshead	600	
„ reattachment to crosshead	601	
recoils on ram	581, 582	
reservoir and separator	624	
roller axles, periodical cleaning and lubricating	615	
ram, bound round with oiled tow after gun is pumped down	608	
roller path, lower, kept clean	614	
shaft bearings, periodical cleaning and lubricating	615	
traversing gear, attachment and testing	565	
„ how to keep in working order	614	

Digitized by Google

	Para.	Page.
Carriages, Garrison—*continued*—		
disappearing—*continued*—		
traversing gear, taken to pieces every six months	616	
trunnion bearings, oiled	617	
valves, raising, adjustment and packing gland	590, 591	
„ recoil, adjustment of	584–589	
„ „ firing after alterations	589	
„ „ pressure worked to	585	
„ „ removal, to renew lead washers	587	
„ „ situation of, access to	586	
washers, leather, forming joints, position of	619	
„ lead „ „	619	
„ „ made locally	613	
„ in contact with liquid	621	
6-inch, putty for joint of foot plates	614A	
„ racers, protection from damp	614A	
R.M.L. heavy guns, natures	434	
double plate	440–449	
construction	440	
component parts	442	544–577
elevating arcs, attachment of	443, 444, 448	
„ gear, description	441	
„ „ capstan head, attachment of	443	
„ „ worm wheel, attachment of	445	
„ „ 9-inch and 12-inch differ from 10-inch	447	
running up gear, fitting up	449	
medium guns, natures	450	
double plate, R.B.L.	451	
component parts	452	620–641
compressor gear, attachment of	461	
elevating arcs, attachment of	456	
„ gear, R.B.L., 7-inch	454	
„ „ „ 40-pr. and 20-pr.	455	
hydraulic buffers	457–460	
rollers, placing in position	453	
single plate, natures	462	
component parts	463	620–641
elevating arcs, attachment of	464	
high angle—		
care and preservation	542–561	
axles of rollers, periodical cleaning and lubricating	558	
ball bearings, lubricating	549	
„ adjustment when setting gun on	550	

Digitized by Google

	Para.	Page.
Carriages, Garrison—*continued*—		
high angle—*continued*—		
care and preservation—*continued*—		
buffer, mode of filling	544	
cylinders, recoil, emptied and cleaned out every 12 months	543	
„ kept filled to preserve packing	554	
examination weekly	552	
gauge, dead-weight testing	560	
gear bearings, periodical cleaning and lubricating	558	
guides, kept free from rust, and oiled	548	
hydraulic packing, renewing	542	
indicator, pressure	560	
leakage, recoil cylinder, how remedied....	542	
„ of pressure	555	
leathers, spare, kept in store	556	
„ „ supply to be kept up	557	
pump, air, double	560	
ram, bound up with oiled tow after practice	553	
recoil, for full charge, limit of	546	
„ plugs, &c., leakage from, how remedied	547	
reservoir	560	
roller paths, &c., to be kept clean	551	
separator	560	
valve, recoil, adjustment of	545	
Carriages, Siege, Travelling	465–469	
component parts	—	620–641
elevating gear	467	
„ alternative arrangement in case of damage to	468	
hydraulic buffers, attachment of	466	
parts of, detail	469	
Cartridges—		
for equipment, making up of	192	
in R.A. charge, to be kept filled	80	
of mixed lots of powder, blending for practice ...	187	
paper covers, for, disposal of	190	
return to store	48	
S.B. guns, loose powder for	83	
S.B. and S.B.B.L. guns to be kept filled	82	
to be filled by R.A. for practice in certain cases ..	186	
Casemates, special, for turntables	627, 628	
Cases, Packing, issued with position-finders retained at stations abroad	111A	
Chains, Shell Lifts, testing and preservation of	696–698	
Charge, Equipment, divided between R.A. and O.S.D.	67, 69	

Digitized by Google

	Para.	Page.
Cleaning Materials, for ordnance, carriages, &c.	221–229	
Cleaning Ordnance, &c., for painting, periods for	271	
Combustible Stores, newest to be returned to store	49	
Compressor Gear. [*See* **Carriages.**]		
Cups, Obturating—		
examination, B.L. guns	388	
„ S.B.B.L. guns	402, 403	
Cylinders—		
fuze, tube, and primer, issued full	86	
„ „ not opened till required	91	
„ „ open, to be replaced	92	
D.		
Demands—		
articles supplied in certain proportions per battery	73	
„ „ proportion to guns	75	
fuze-hole plugs	254	
gas checks	252, 253	
made for each separate account	259	
Detonators—		
for destroying shells	54	
return to store	93	
packing and storing	55	
District, definition of	70	
District, Armament, definition of	71	
District Establishments—		
ammunition for practice, allowance	169	
arms and accoutrements for	7	
stores for gun drill and laboratory instruction	125	
Drill, Stores for—		
district establishments	125	
instructors in gunnery	124	
proportions for gun drill	122	688–689
maintained at headquarters or out stations	127	
E.		
Elevating Arcs, refilling graduations	433	
Emery, not used on ordnance machinery	226	
Equipment, headquarter staff and staff clerks, by whom demanded	6	
Equipments—		
details for armaments of works	57	295–451
maintenance of proportions	69	
statements of. Army Form G. 908	69	
Estimates, preparation of	41–46	

Digitized by Google

	Para.	Page.
Examination of Ordnance. [*See* **Inspection.**]		
Exchange of Ordnance in important positions	314	
Exchanges, component parts of guns and mountings, accounting for	264	
F.		
Fittings, Gun. [*See also* **Inspection of Ordnance.**]		
examination of, B.L.	388	
,, Q.F. breech	397–400	
,, R.B.L.	389–395	
,, S.B.B.L.	401–408	
preservation of	290–297	
Flags, Red, supplies to batteries for practice	107	
Forges, Field—		
for repair of armaments	200	
distribution of	201	
Forms, Army—		
list of, armaments	—	451
,, companies	—	702, 710
Forts, grouping of	74	
Fuzes—		
cylinders of, not opened unless required....	91	
,, open, to be replaced by complete	92	
,, supplied full	86	
for general manning of works	129	
for instructional purposes	128	
full equipment kept in R.A. charge	87	
in time of war transferred to R.A. charge	90	
maintained in O.S.D., kept ready for use	89	
proportions to be maintained	85	
return to store	93	
spare for practice, not allowed	188	
storage of	88, 89	
supply of	86	
G.		
Gas Escape Channels, kept clear	285	
Gas Checks—		
demands, charging and accounting for	252, 253	
recovery of, rewards for	56	
storage of	—	207
Gauges—		
for projectiles	241–247	
pressure, dead-weight testing	626	
Grouping of forts and batteries for stores	74	

Digitized by Google

	Para.	Page.
Group Symbols—		
painting	219A	
stencil plates for marking	219A	
Guns—		
for salutes and dismissal of recruits	78	
newly mounted, testing of mountings	60	
Q.F. removal and replacement of fittings	397–400	
Guncotton—		
for destroying shells	54	
packing and storage of	55	
Gunpowder—		
kept loose in R.A. charge, services for	83	
from shells, to be wetted	50	
H.		
Handbooks, proportions and distribution	218	
Handcuffs	—	686, 710
Harness and Saddlery	—	707–708
materials for repair....	—	708–709
R.A. district staff, repair of	220	
Harness for movable armaments	121	
Hoisting Gear—		
care and preservation of	634–636	
controlling gear at Portland breakwater fort	633	
for carriages, &c., up to 20 tons	632	
for landing, moving, and mounting heavy guns	96	186–205
for landing heavy guns at sea forts	630, 631	
for Spithead forts	635, 636	
Hoops, powder barrel, return to store	51, 52	
Howitzers—		
beds for	484	
equipment details	—	353–358
Hydraulic Buffers. [*See* **Buffers.**]		
I.		
Implements, special, and spanners, for L.S. mountings	—	278–292
Impressions of Guns, to be labelled	344	
Indicators, pressure spring	625	
Inspections—		
half-yearly, by officer commanding Artillery district	1, 2	
jointly, by C.R.A. and District C.R.E.	4	
joint, by R.A. and R.E., record of	61–63	
Inspection of Ordnance—		
abroad	313	
accidents, immediate inquiry and report	320	

Digitized by Google

	Para.	Page.
Inspection of Ordnance—*continued*—		
at home, arrangements for....	307–312	
bore. [*See also* **Bores.**]		
,, examination of	329–344	
,, cleaning with potash....	325	
,, examined by lamp and searcher	326	
,, preparing for examination	324	
,, S.B. guns	327	
,, tools for cleaning	323	140–147
,, ,, for examination of	329	140–147
condemnation, final....	301	
,, provisional....	302	
cast-iron, examination of exterior....	409	
defects in bore, rules for sentencing	345–354	
,, C.I. guns	345	
,, ,, rules for sentencing	346	
,, general ,, ...	370–378	
,, lined guns ,, ...	355–369	
,, lined guns, B.L., augmenting strips, use of	363	
,, lined guns, B.L., condemnation, provisional	354	
,, lined guns, B.L., endway movement of liner	360	
,, lined guns, B.L., erosion in bores	362	
,, lined guns, B.L., flaws in liners	361	
,, lined guns, B.L.. guttering in bore liner	359	
,, lined guns, B.L., openings between external hoops	364–367	
,, lined guns, B.L., openings between hoops, reports on	369	
,, lined guns, B.L., split liner, escape of gas from	357	
,, lined guns, B.L., split liner, gun may be fired on emergency	355, 356	
,, lined guns, B.L., turned liner, gun may be fired	358	
,, lined guns, B.L., warped or bent, A tube	368	
,, rifled guns, classification of	347	
,, ,, fair wear	349	
,, ,, tool marks	348	
,, ,, B.L., scoring, parts most liable to	352	
,, rifled guns, B.L., scoring to be watched with certain guns	353	
,, rifled guns, R.M.L. scoring	350	

Digitized by Google

	Para.	Page.
Inspection of Ordnance—*continued*—		
defects in bore, rifled guns, R.M.L., scoring, limit of for use of gas checks	351	
,, rifled guns, coil marks	371	
,, ,, cracks	375	
,, ,, defective welds	371	
,, rifled guns, dents and abrasions by explosion of shell in bore	376, 377	
,, rifled guns, doubtful cases, a few rounds to be fired	378	
,, rifled guns, importance of flaws depends upon position	373	
,, rifled guns, longitudinal fissures....	374	
,, ,, measuring and noting positions	342, 343	
,, ,, specks, spots, and pin-holes	372	
,, ,, wearing of grooves	370	
fittings, B.L., examination of	388	
,, R.B.L., breech blocks, 40-pr. side closing	395	
,, ,, ,, bush	393	
,, ,, ,, screw	389	
,, ,, lever and tappet	390	
,, ,, vent piece	391	
,, ,, ,, cross-head of....	392	
,, ,, vent pieces, 40-pr., to be changed during practice	394	
,, Q.F., examination of	397–400	
,, S.B.B.L., breech screw	401	
,, ,, carrier	407	
,, ,, catch for carrier	408	
,, ,, lever	404	
,, ,, obturating cup	402, 403	
,, ,, ,, ring	405	
,, ,, retaining clip	406	
guns in naval reserve batteries	311	
impressions, instruments for taking	331–339	
,, portions of bore, method of taking....	341	
,, positions of bore and powder chamber to be taken	329	
,, preparation of gutta-percha....	340	
,, to be taken with gutta-percha	330	
,, to be labelled....	344	
in charge of public bodies	322	
instructions not applicable to experimental guns	305	
memorandum of examination	321	
in charge of militia, volunteers, and naval reserve	307	
number of rounds to be fired between examinations	303	

Digitized by Google

	Para.	Page.
Inspection of Ordnance—*continued*—		
number of rounds to be fired blank charges	304	
ordnance U or R, in important positions, exchange of	314	
reports at home	310	
re-vented or repaired	318, 319	
rules for furnishing annual returns	419–428	
ships, abroad	316	
,, at home	315	
,, sentence, mode of	317	
special cases, more frequent examinations	306	
Southern, Western, and Cork Districts	312	
vent, examination of	379–383	
,, defects as to, and sentence	384-387	
,, effect of firing, on	384	
,, sentencing, directions for	385, 387	
,, steel barrel guns, fissures, treatment of	386	
Wrought-iron, examination of exterior	409–417	
Inspectors of Ordnance Machinery mountings, gun, examination after practice	149, 160	
Instructional Stores—		
accounting for	256	
fuzes, stations abroad	128	
gunnery instructors	124	690–698
instruction in electricity	126	687
proportions for gun drill	122	688–689
stored at headquarters or out stations	127	

J.

Jacks, hydraulic—		
placed in "Frame" when not in use	515	
G.S. pattern—		
care of	663, 664	
filling, fluid for	660	
,, mode of	661, 662	
leather packings, how to get at	669	
lowering a load, instructions for	670–672	
parts liable to get out of order	666	
precautions to be observed in working	670–672	
raising a load, instructions for	666	
transport, preparation for	665	
rear-roller, pumped up from time to time to keep carriage in position	650	
Tangye's pattern—		
care of	648, 649	
filling, filter used	647	
,, fluid for	646	
lowering a load	653, 654	

Digitized by Google

	Para.	Page.
Jacks, hydraulic—*continued*—		
Tangye's pattern—*continued*—		
parts liable to get out of order	656-659	
pump, removal of	655	
raising a load, instructions for	652	
transport, preparation for	651	
Joint Armament Returns—		
preparation of	65	
amendments to	66	
L.		
Laboratory—		
grouping of, for supplies	74	
stores, for district establishments....	125	
„ for instruction, stations supplied to	123	228
„ „ detail of	—	699-701
Lacquering—		
of bores after practice	191	
„ lacquer for	—	148-150
„ tools for	282	140-147
„ when not in use	273, 282	
Landing Gear, for heavy guns at sea forts, &c. ...	630, 634	
Lanyard Guides	295	
Lettering of Carriages	219	
Levers, iron pointed, not to be greased	511	
Lifting Gear—		
for use at Spithead forts	635	
care and preservation of	636	
Local Tradesmen, employment of	240	
Lubricants—		
extra allowance for sea batteries where armaments are exposed	228	
„ „ for armaments when first mounted	227	
for chains	229	
for leather work of carriages, &c.	229	
for wheels, gyns, shell lifts, landing gear, &c.	229	
fresh, application of, to carriages and slides	492	
proportions of, for general purposes	222	46-58
uses of	223	
Lubricating holes—		
cleaned out	512	
list, showing positions of, hung up in each work....	512	
M.		
Machine Guns—		
armament, ammunition for	79	399
care and preservation of	418	
equipment details	—	400-406

Digitized by Google

	Para.	Page.
Magazines—		
charge of	67	
stores, detail of	—	442–451
,, spare	—	673–675
Maintenance of Armaments	57–78	
Mantlets, rope—		
charge and maintenance of....	98–101	
doors....	99, 645	
mantlet bars kept clean	642	
soaking in chloride of calcium	637–640	
to be kept dry	644	
working of weekly	643	
Marking—		
carriages and wagons of movable armaments	219	
group symbols, stencil plates for	219A	
Memorandum of Examination—		
ordnance	321	
,, blank rounds, recording of	304	
carriages	435–439	
Model, broken points of Palliser shell	684	
Mortars, cleaning bores of	328	
Mounting Guns, stores and gear for	—	186–205
Mountings, Gun—		
B.L. cleaning, &c., before periodical painting	520	
,, instructions for	485	
,, oil for buffers and pumps, quantities	486	
cleaning and painting biennially	271	
,, ,, when exposed to sea spray	271	
examination and overhaul before painting	272	
,, ,, periodical	519, 520	
reports by I.O.M.	523	
,, at conclusion of practice	149, 160	
Movable Armaments—		
ammunition for	79, 119	
composition of	119	
equipment details	119	407–433
harness for	121	
range finders for, large, field	120	
Musical Instruments	—	685, 707
Muzzles, Gun—		
depressed when not in use	293	
stopped with tampeons	292	

N.

Naval Services, examination of ordnance for	315–317	

Digitized by Google

	Para.	Page.
O.		
Ordnance—		
accidents, immediate inquiry and report on	320	
annual returns of, rules for furnishing	419–428	
axial vented—removing and replacing the axial vent	429–432	
,, and B.L. clearing vents before practice	189	
bores, kept in order by R.A.	283	
,, to be lacquered after practice	282	
,, ,, when not in use	282	
,, washed out and greased after each day's practice	282	
charge of	67	
cleaned and painted biennially	271	
increase, or change in authority necessary	45	
exposed to sea spray, &c., cleaned and painted every year, or oftener	271	
fittings, preservation of	290–297	
for dismissal of recruits	78	
for salutes	78	
,, number of guns for	78	
gas escape channels, kept clear	285	
in O.S. charge, annual returns of	419	
,, R.A. charge ,, ,, ...	420	
,, possession of militia and volunteers, preservation of	224	
inspection of. [*See also* **Inspection of Ordnance.**]	301–428	
machinery, removal of rust	226	
mounting and dismounting, gear and stores for	96	186–205
preservation, painting and inspection	221	
,, of, extra allowance of lubricants, in certain cases	228	
,, ,, extra articles, special demand for	225	
,, ,, instructions for	273–297	
,, ,, stores for	221–229	
radial copper vents, cleaning of	278	
re-venting, considered serviceable after	383	
rifled, special issue of cleaning materials on first receipt from store	227	
salutes, signalling, time guns, stores for	77	
sights, preservation of	286–289	
spare parts, charge of	69	
,, details	—	454–475
transport of, preparation of	298–300	

Digitized by Google

	Para.	Page.
Ordnance—*continued*—		
used for practice, regimental	150	
,, ,, station	135–138	
64-pr., 71 cwt., pin for block of breeching loop to be kept free	284	
R.B.L., 40-pr., special vent piece for drill	396	
,, vent pieces to be frequently changed during practice....	394	
Q.F., 4·7-inch, instructions for removal of fittings	397	
,, 12-pr., instructions for removal of fittings	397A	
,, 6-pr., instructions for removal of fittings	398, 400	
,, 3-pr., instructions for removal of fittings	399, 400	
S.B. bores liable to corrosion	345	
P.		
Painting—		
carriages and slides....	537–541	
,, ,, paint for	—	153–156, 165–167, 169
,, ,, scraping previous to	533–536	
,, ,, time and working, pay for	—	157–160, 176–178
guns and mountings, colour to harmonise with surroundings	280	
miscellaneous articles, paint for	—	161–172
mountings examined before	272	
ordnance, carriages, &c., superintendence of	237–239	
,, ,, by local tradesmen	240	
,, dismounting and preparing for	274–276	
,, examined before	272	
,, two coats	279	
,, paint for....	281	148–150
,, preservation by	273	
,, scraping and cleaning before	277	
,, time and working, pay for	281	151–152
paint, descriptions used	233	
,, for group symbols and manning boards ...	219A, 231	
,, supplied, prepared for use	230, 232	
,, where rubbed off gun mountings, to be repainted at once	49	
periods for	271	

Digitized by Google

	Para.	Page.
Painting—*continued*—		
projectiles	686–693	
,, paint for....	695	181–184
time and working, pay for....	234, 235	
Pins, breeching loop block, 64-pr., 71-cwt. gun, to be kept free	284	
Pivots—		
blocks and plugs, patterns of	105	232–237
care to be taken with	503	
charge of, and accounting for	104	
demands for....	102	
plugs and pins, 32-pr. S.B.B.L., demands for	103	
rubbed with oil wiper	538	
Plates—		
elevating, removal for transport	294	
stencil, marking group symbols	219A	
Platforms, double-decked, laying of, for practice	180	
Plugs—		
fuze-hole, demanding and accounting for	254	
pivot, demands for....	103	
,, patterns of	105	232–237
Position-finders—		
cases, for stores and Le Clanché cells, return of....	112	
,, packing, when empty to be returned from home stations	111	
,, packing, to be retained at stations abroad	111A	
equipment for different marks of	109	
issue of	110	
or portions of, returned to store, cases to be labelled....	113	
repair of stores in connection with	110	
stores in connection with	109	678–680
where installed	108	
Position-finding—		
implements and special tools for instructors in P.F.	203	275–276
practice, schools of instruction, proportions of ammunition for	174	
schedules for	114	
stores, instruction in electricity	125	687
tools for repair of	—	266–274
Powder Barrels—		
empty, hoops to be returned with	51	
not to be stripped of hoops	52	
Practice—		
ammunition. [*See also* **Ammunition.**]		
,, of oldest date to be used	186	
,, demands for, to replace	185	
,, required for following year, statement of....	177	

Digitized by Google

	Para.	Page.
Practice—*continued*—		
annual	131	
at conclusion, bores to be lacquered	191	
B.L. guns, left loaded at end of day's practice, treatment of	176	
,, number of rounds to be fired in one year	175	
B.L. and axial vented guns, vents to be cleared before commencing	189	
double-decked platform for laying of	180	
flag, red, for batteries used for practice	107	
infantry, Malta and Gibraltar	166	
,, St. Lucia	167	
machine guns, local arrangements	146	
movable armaments, St. Lucia	167	
plugged shells, filled with water	181, 182	
removal of bulkheads	178	
,, ,, responsibility for damage done	179	
shells fired with blowing charges, filled with coal dust	183	
,, shrapnel, with fixed primer, fired over sea ranges only	186	
,, to be used, selection of	186	
under service conditions	134	
company, allowance of ammunition	163	
,, allowance for elementary instruction of young soldiers	170	
,, camps of instruction	164	
,, common shell, plugged	172	
,, detachment at St. Helena	168	
,, district establishments	169	
,, local companies, R.A.	168	
,, reports of result	173	
half-yearly, B.L. guns on disappearing carriages	136	
,, R.M.L. on H.A. carriages	136	
position-finding, at schools of instruction	174	
regimental, allowance of ammunition	150	
,, 32-pr. S.B.B.L. guns	151	
,, companies at Shoeburyness	154	
,, examination of mountings at conclusion	160	
,, guns to be used	155	
,, in combination with station practice	155	
,, local companies, R.A.	152	
,, projectiles to be used....	156	
,, ,, use of shrapnel shell and case shot	157	
,, Q.F. guns	158	
,, reports of result	159	

Digitized by Google

	Para.	Page.
Practice—*continued*—		
regimental, to test means of communication, &c.	155	
schools of instruction, allowance of ammunition for	165	
„ „ special report at conclusion	165	
siege, carried out under special directions	161	
„ special report at conclusion	162	
station, annually, from half the works in a district	144	
„ examination of mountings at conclusion	149	
„ exemptions from	137	
„ grouping of guns	143, 145	
„ guns of lighter natures	141	
„ „ to be fired every second year	135	
„ „ 17·72-inch and 16-inch	138	
„ paper shot or blank ammunition, when to be used	140	
„ „ range at which to be fired	141	
„ projectiles to be used	139	
„ reports on result	148	
„ targets to be used	147	
„ test working of mountings and gear	144	
„ the three rounds to be fired on same day	143	
Primers—		
supply of, full cylinders to be issued	86	
vent piece, spare	188	
Projectiles. [*See also* **Shells.**]		
gauges for	241–247	
gauging, previous and subsequent to painting ...	688	
painting	686–693	
Palliser, fractured, examination of	684	
piling	694	
recovery after practice, rewards for	56	
scraping and examining	673–684	
storage, arrangements for	—	206–207
used at practice	136–139, 156–157	
Pumps, air, double, carriage, garrison, disappearing—		
spare parts for	—	676
R.M.L. 6·6-inch gun, spare parts for	—	677

Q.

Quick-Firing Guns—		
ammunition for	79	399
equipment details	—	366–399
examination of fittings	397–400	
fittings component and spare parts	—	664–667
instruments, taking impressions of bores of	331, 334, 339	

Digitized by Google

	Para.	Page.
R.		
Racers—		
charge of, and accounting for	104	
cleaning	502	
demands for, and fixing	102	
examination in permanent works	524	
for disappearing mountings, to be level	562	
,, ,, 6-inch B.L. protection from damp	614A	
patterns of	105	
table of	—	232–237
Racks, traversing—		
charge of, and accounting for	104	
demands for, and fixing	102	
patterns of	105	
table of	—	230–231
Range Finders—		
depression	94	208–222
,, instructions for care and preservation	—	223–225
field, large, for movable armaments	120	
specimen form of history sheet	—	226–227
Range Tables, proportions and distribution	218	
Records of Joint Inspection—		
R.A. and R.E.	61–63	
amendments to	64	
Recruits, ordnance for dismissal of	78	
Reports—		
gun practice	148, 159 162, 173 165	
inspectors of ordnance machinery....	19, 24, 25	
instructions for rendition of	59	
special, half-yearly inspections	2	
weekly by armament artificers	37	
Requisitions—		
for new armaments	47	
for materials for repair and preservation of armaments	255	
Reservoirs, compressed air, use	624	
Responsibility of R.A. and O.S.D. for maintenance of equipments	69	
Return to Store—		
detonators, fuzes, and tubes	93	
filled shells and cartridges	48–50	
hoops of powder barrels	51–52	
plugged shell and shot recovered after practice ...	53	
Returns—		
annual, of ordnance, rules for furnishing	419–428	

Digitized by Google

	Para.	Page.
Returns—*continued*—		
joint armament R.A. and R.E.	65	
,, ,, amendments to	66	
instructions for rendition of	59	
Rewards for recovery of projectiles and gas-checks....	56	
R.B.L. Guns—		
equipment details	—	345-352
fittings, component and spare parts	—	472-475
R.M.L. Guns—		
equipment details	—	311-344
fittings, component and spare parts	—	466-471
R.M.L. Howitzers—		
equipment details	—	353-358
fittings, component and spare parts	—	466-471
Rockets, war, employment of, special	95	
Rope Mantlets, maintenance of	98-101 637-645	
Rust, removal of	226	

S.

Saddlery—		
R.A. district staff, repair of	220	
universal, details	—	707, 708
materials for repair....	—	708, 709
Saluting—		
ammunition	197	
ordnance	77, 78	
,, examination of, periods for	303	
Sandbag, placed in front of muzzle of B.L. guns when clearing the vent before practice	189	
Screws—		
fixing, removed and oiled	297	
preserving, friction tube pin-hole, removed and oiled	296	
Separators, air pump	624	
Shell Lifts—		
winches and chains, testing of	696-697	
,, ,, preservation of	698	
Shells—		
by whom filled	194	
common, loaded with blowing charge to represent shrapnel	156	
,, to be fired plugged, except in certain cases	172	
diaphragm shrapnel, fuze-hole and loading-hole plugs lubricated	682	
empty, adapters removed and lubricated....	683	
examination of, before filling	691	

Digitized by Google

	Para.	Page.
Shells—*continued*—		
examination of interiors	674	
,, plugs removed and re-lubricated	683	
,, lead coated	676	
,, leather collars, fuze-hole plugs	680	
,, Palliser	684	
,, rivet holes, spherical shell	681	
,, shrapnel	675	
,, shot runs and trestles for	673	
filled, adapters for, coated with red lead.... ...	222A	
,, bursting charge to be drowned for practice	186	
,, dates, &c., renewed without emptying	692	
,, metal fuzes lubricated	682, 683	
,, return to store	48–50	
,, with dry coal dust when using blowing charges	183	
,, with water when fired plugged	181	
,, ,, unexpended at practice, to be emptied	182	
fuze-holes cleaned	682	
gauges for	241–247	
gauging, previous and subsequent to painting	688	
in R.A. charge, to be kept filled	80	
,, ,, loose powder for	83	
moorsom gauge fuze-hole, disposal of	677	
painting, paint, quantity, table of....	—	181–184
,, paints, various, ingredients for	695	
,, plugs and recesses	683	
,, portions to be painted	687	
,, previous to filling	691	
,, repainting filled shells	690	
,, two coats	686	
,, time and working-pay for	689	181–184
,, yellow band, practice shell	693	
piling, mode of	694	
plugs and adapters, lubricant for	222	
scraping, exteriors	678	
,, interiors	679	
shrapnel, in lieu of common, for practice....	157	
storage of	—	206–207
unexploded, recovery after practice	53	
,, plugged, to be returned to O.S.D.	53	
,, destruction by gun-cotton	53, 54	
Ships, examination of ordnance on	315–317	
Shot—		
Palliser, filled with sand, marked with W	194	
paper, filling of, instructions for	195	
Shot Run and Trestles for examining and cleaning shells	673	
Siege Artillery....	115	

Digitized by Google

	Para.	Page.
Siege Companies—		
ammunition for equipment....	79	
,, practice	161	
equipment, charge of and accounting for	118	
,, details of	117	434–442
distribution of companies	116	
practice, special report on conclusion	162	
tools, painting carriages	—	442
Siege Travelling Carriages—		
examination of	465–469	
elevating gear for	467	
,, alternative arrangement in case of damage to gear	468, 469	
hydraulic buffers for	466	
tools for painting	—	442
Sights, preservation of	286–289	
Signal Guns, ammunition for	197	
Signalling—		
equipment	—	684, 685
ordnance for....	77	
Slides—		
for double-plate carriages	470–476	
R.M.L. guns, component parts, attachment of	472	
,, ,, table of	—	578–619
,, description	470	
,, hydraulic buffers, securing to slide	475	
,, ,, filling the cylinder....	476	
,, running back gear, attachment of	473	
,, ,, ,, adjustment of chains	474	
,, traversing gear, attachment of	473	
,, ,, working of	471,471A	
medium guns, component parts of	478	
,, ,, table of	—	654–663
,, compressor gear, attachment of	483	
,, hydraulic buffers, circular	479	
,, ,, filling the cylinder	482	
,, ,, fitted with caps	480	
,, ,, securing to slide	481	
,, running in and out gear	477	
care and preservation	487–526	
cleaning and lubricating	491	
,, caked oil and sand to be removed	494	
defective or deficient parts to be renewed	521	
examined previous to scraping and painting	533	
examination, accuracy of level of racers to be tested	524	
gear removed and cleaned before periodical painting	519, 520	

Digitized by Google

	Para.	Page.
Slides—*continued*—		
gear, under, examination of	493	
in exposed works, detachable fittings to be removed and placed in store	489	
lubricating holes, lists showing positions of	512	
packing for transport	527–532	
painting. [*See also* **Painting.**]	537–541	
„ paint for, table of	—	154–156, 169
precautions before practice or drill	497	
preservation, inspection, &c.	221	
„ stores for, annual allowance	222	
racers, accuracy of level to be tested	524	
removal or adjustment of gear, care to be taken	499	
scraping, preparatory to painting	533–536	
„ implements to be used	535	
„ rust, clogged oil, &c., to be thoroughly removed before painting	534	
„ and painting, time and working-pay for	—	159, 160, 178
spare parts of, charge of	69D	
„ details of	—	578–619, 654–663
top slightly oiled during practice	496	
truck brackets, adjustment of	501	
trucks, inner flanges of, to be greased	502	
Smooth-bore B.L. Guns—		
equipment details	—	359–365
fittings, component and spare parts	—	472–475
„ examination of	401–408	
Spanners and Special Implements for L.S. mountings	—	278–292
Spithead Forts, apparatus lifting guns from lower to upper tier	635–636	
Staff Clerks, demands and accounting for equipment for	6	
Staff, headquarters, equipment for, demands for	6	
„ „ accounting for	7	
Stamps, marking, R.A. regimental services	—	686, 710
Stable necessaries	—	708
Store Accounts, instructions for keeping	248–269	
Stores—		
applicable to all ordnance, supply of	73	
arrangement in works	68	206–207
for destruction of shells	54	
for drill and instruction	122–130	688–698
for instruction in electricity	126	687
for laboratory instruction	123	699–701
for landing, transporting, and mounting guns	96	186–205

Digitized by Google

	Para.	Page.
Stores—*continued*—		
for preservation of ordnance, &c.	221–229	46–58
supply of, according to number of pieces....	75	
„ grouping of forts and batteries for	74	
„ to batteries	73	
„ to districts or stations	76	
supplies due from O.S.D., return of	2	
used in connection with position-finding....	—	678–680
Sub-District, definition of	72	

T.

Targets—		
abroad made locally	206	
accounting for	213	
anchors and cables, loss of....	216	
boats, for laying out, estimate for hire of	207	
floating, not left out at night	217	
for station practice, placing of	147	
instructional....	208, 209	
moving, small, annual cost per station	210	
pattern of	204, 210	
proportions, companies	204	
„ reduction of, where more than one company practice....	205	
provision and construction of	211	
record, large, proportions and distribution	210	
return to store	214, 215	
rope for towing	212	
shot away, written off charge	216	
working pay for manufacture and repair	213	
Text Books, proportions issued, and distribution	218	
Time Guns, stores allowed for	77	
Tools—		
artificers, lists of	—	246–274
„ of garrison companies	198	
„ for regimental work	—	686
charge and maintenance of	201	
cleaning bores of guns	323	140–147
examining Q.F. guns	—	140–145, 399
„ scraping and painting ordnance	199	140–147
intrenching	—	686
opening packages	—	686, 710
repairing armaments in districts	200–202, 270	
„ „ distribution of	201	
special, for instructors in position-finding	203	275–276
enting ordnance	—	238 245

Digitized by Google

	Para.	Page.
Transport—		
of carriages and slides, packing for	527–532	
of jacks, hydraulic, preparation for	651, 665	
of ordnance, preparation for	298–300	
„ stores for	96	
Traversing Arcs—		
charge of	104	
demands for	102	
patterns of	105	
refilling graduations	433	
table of	—	230–231
Traversing Racks—		
charge of	104	
demands for	102	
patterns of	105	
table of	—	230–231
Trumpets	—	685, 707
Tubes—		
cylinders, incomplete, to be returned to store	92	
„ not opened unless required	91	
„ opened, to be replaced by complete	92	
„ supplied full	86	
electric, drill, reprimed and rebridged after firing	130	293
for general manning of works	92, 129	
for time guns, cylinders opened for, tubes to be used up	92	
friction, spare, for practice	188	
full equipment kept in R.A. charge	87	
in O.S. charge kept ready	89	
in time of war, transferred to R.A. charge	90	
proportions to be maintained	85	
return to store	93	
storage of	88, 89	
supply of	86	
Turntables—		
casemates for	627, 628	
charge of	629	

V.

Vents—		
axial, instructions for removing and replacing	429–432	
examination of	379–383	
„ defects and sentence	384–387	
radial, copper, cleaning of	278	
re-venting, examination after	319	
„ serviceability after	383	
„ stations abroad	318	
tools for venting	—	238–245

Digitized by Google

	Para.	Page.
Vent Pieces—		
changed during practice, 40-pr.	394	
drill purposes, for 40-pr.	396	
examination of, &c.....	391–393	
removal when not in use	291	
Veterinary Stores	—	710
Vouchers—		
care in preparation of	268	
exchanges of component parts of guns and mountings, &c., for	264	
to accompany accounts	257	
W.		
Wagons, marking of	219	
Welds, defective, on exterior of guns	411–413	
Winches, in shell lifts, testing and preservation of	696–698	
Working Parties—		
local tradesmen, employment of	240	
strength of	238	
superintendence of	237–239	
Working Pay—		
for cleaning, painting, &c., carriages and slides	—	157–160, 175–179
„ „ miscellaneous articles	—	173–180
„ „ ordnance	—	151–152
„ „ projectiles	—	181–184
„ „ pay lists	236	
„ „ piece work, for	235	
„ „ master-gunners not entitled to	239	
for painting group symbols and manning boards	—	184
Workshops—		
for repairing armaments	200	
„ „ distribution of	201	
Works, proposals for new, or alterations	3	

Digitized by Google

(Wt. 4865 1625 8 | 96—H & S 9337)

Digitized by Google

MILITARY BOOKS, published by Authority—continued.

8-inch R.M.L. Howitzer of 7 cwt. 1895. Price 3s.

7-inch R.B.L. of 72 cwt. and 82 cwt., on Moncrieff and Sliding Carriages. 1892. Price 1s.

6·6-inch R.M.L. Howitzer on Bed and Ground Platform, or on Siege Travelling Carriage. (Land Service.) 1893. Price 1s. 6d.

6-inch B.L. Marks IV., V., and VI. 1892. Price 2s. 6d.

0·45-inch Maxim M.-H. Chamber Machine. Mounted on Carriages, Field, Machine Gun, and Parapet Mounting. 1893. Price 6d.

0·303-inch Maxim Magazine Rifle Chamber Machine. Mounted on Carriages, Field, Machine Gun, Cavalry and Infantry. 1893. Price 1s.

LAW, MILITARY. Manual of. 1894. Price 2s. 6d.
(Out of print.)

MAGAZINES, AMMUNITION STORES, LABORATORIES, &c. Regulations for. 1894. Price 1s. 6d.

POSITION FINDING INSTRUMENTS. Handbook for. 1895. Price 3s.

RANGE FINDER. Depression. For Elevated Batteries. Handbook for the. Land Service. 1895. Price 6d.

RANGE-FINDING. Field. Manual of. For Officers and Non-Commissioned Officers of the Horse and Field Royal Artillery. 1891. Price 1s.

BASHFORTH CHRONOGRAPH: Report on Experiments with. (1870.) Price 1s. Final do. (1878–80.) Price 2s. 3d.

SADDLES AND COLLARS. Sore Backs and Sore Shoulders. Second Edition. 1893. Price 1s.

SCHOOL OF MUSKETRY AT HYTHE: Report on the Instruction carried on at, and of the Progress of Musketry Instruction in the Army during the Year ending 31st March, 1895. Price 5s Reports on the Years 1859 to 1893 can also be had.

SIGNALLING. Manual of Instruction in. *(Under revision.)*

SMALL ARMS AND AMMUNITION. MILITARY. Text Book for. Price 2s. 6d.

TELESCOPIC SIGHTS Handbook for. Land Service. 1894. Price 6d.

ROYAL MILITARY ACADEMY. ADMISSION TO. Regulations respecting. 1893. Price 1d.

ROYAL MILITARY COLLEGE, ADMISSION TO. Regulations respecting. 1893. Price 1d.

ROYAL MILITARY COLLEGE: Syllabus of Course of Instruction at. 1894. Price 3d.

MILITARY EXAMINATION PAPERS, viz.:—

Royal Military Academy, Woolwich. November, 1895. Price 1s.
Royal Military College, Sandhurst. November, 1895. Price 1s.
Staff College. Admission to. August, 1895. Price 1s.
Staff College. Final Examination. December, 1893. Price 1s.
Militia. Subalterns. Military Competitive Examination of, for Commissions in the Army. March, 1896. Price 1s.
Do. Literary Examination. April, 1894. *Price* 1s.
Foreign Languages. Modern. Examination of Officers of the Army in. April, 1896. Price 1s.
Officers of Regular Forces, Militia, and Volunteers. November, 1893. Price 1 .

Papers of earlier dates can still be had.

ABYSSINIA, EXPEDITION TO. Record of. Compiled by Order of the Secretary of State for War, by Lieut.-Col. Trevenen J. Holland, C.B., Bombay Staff Corps, and Captain Henry Hozier, 3rd Dragoon Guards, In two vols. and case of Maps, cloth, £4 4s.; half morocco, £5 5s.

Digitized by Google

WORKS prepared in the Intelligence Division of the War Office.

AFRICA. BRITISH EAST. Handbook of. 1893. 8vo. 176 pp. 5 maps. Boards. Price 3*s*.

ARMED STRENGTH OF:—

BELGIUM. 1882. Price 2*s*.

DENMARK. By Captain W. S. Cooke, 22nd Regt. 1875. Price 3*s*.

FRANCE. By Major C. J. East, 57th Regt., D.A.Q.M.G. 1877. Price 7*s*. 6*d*.

THE GERMAN EMPIRE. By Captain J. M. Grierson, R.A., and Edited by Colonel C. W. Bowdler Bell, D.A.A.G. 1888. Part I. With Map. Price 6*s*. 6*d*. Part II. Price 2*s*.

JAPAN. By Captain J. M. Grierson, R.A. 1886. Price 2*s*.

THE NETHERLANDS and their COLONIES. With two Maps. By Major J. K. Trotter, R.A. 8vo. 182 pp. Price 7*s*. 6*d*.

PORTUGAL. By Lieutenant Count Gleichen, Grenadier Guards. 1888. Price 3*s*.

SPAIN. With Map. 1883. Price 3*s*.

SWEDEN AND NORWAY. By Captain W. S. Cooke, 22nd Regt., D.A.Q.M.G. With Map. 1875. Price 3*s*. 6*d*.

SWITZERLAND. By Colonel C. W. Bowdler Bell, D.A.A.G. With a Map. 1889. Price 7*s*. 6*d*.

AUSTRIA-HUNGARY. Military Forces of. 1891. Price 2*s*.

BALKAN STATES, MINOR. Roumania, Servia, Bulgaria, Montenegro, and Greece. Handbook of the Armies of. By Captain C. E. Callwell, R.A., Staff Captain. (1891.) Price 6*d*.

CAVALRY. Instructions for the Training, Employment, and Leading of. By Major-General Carl Von Schmidt. Compiled by Captain Von Vollard-Bockelberg, 2nd Silesian Dragoons. Translated by Captain C. W. Bowdler Bell, 8th Hussars. 1881. Price 3*s*. 6*d*.

CYPRUS. Compiled by Captain A. R. Saville, 18th Foot. 1878. Price 2*s*. 6*d*.

FRANCO-GERMAN WAR, 1870-71. Authorised Translation from the German Official Account, by Major F. C. H. Clarke, C.M.G., R.A.

First Part:—*History of the War to the Downfall of the Empire.*

Vol. I.:—Sects. 1 to 5. Outbreak of Hostilities to Battle of Gravelotte. Price 26*s*. (*Out of print*).

Vol. II.:—Sects. 6 to 9. Battle of Gravelotte to Downfall of Empire. Price 22*s*. (*Out of print*.)

Second Part:—*History of the War against the Republic.*

Vol. I. Sects. 10 to 13:—Investment of Paris to re-occupation of Orleans by the Germans. Price 26*s*.

Vol. II., Sects. 14 to 18:—Events in Northern France from end of November. In North-west from beginning of December. Siege of Paris from commencement of December to the Armistice; operations in South-east from middle of November to Middle of January. 1883. Price 26*s*.

Vol. III., Sects. 19 and 20:—Events in South-east France from middle of January to Termination of Hostilities. Rearward Communications. The Armistice. Homeward March and Occupation. Retrospect. 1884. Price 31*s*. 6*d*.

Analytical Index. By Colonel Lonsdale Hale. 1890. Price 1*s*. 6*d*.

Digitized by Google

57
Portsmouth
3516

EQUIPMENT REGULATIONS.

[*To be substituted for Table* 11, *pages* 690–698 *of Part* 2, *Sect. XII, Garrison Artillery Details*, 1896.]

STORES FOR GUN AND REPOSITORY DRILLS, AND FOR GENERAL INSTRUCTION. (SERVICE COMPANIES.)

1896.

LONDON
PRINTED FOR HER MAJESTY'S STATIONERY OFFICE,
BY HARRISON AND SONS, ST. MARTIN'S LANE,
PRINTERS IN ORDINARY TO HER MAJESTY.

23185 s. 165 (29)

Digitized by Google

(Wt. 13211 1625 10 | 96—H & S 4867)

Digitized by Google

EQUIPMENT REGULATIONS.

[*The following will be substituted for Table* 11, *pages* 690-698 *of Part* 2, *Sect. XII, Garrison Artillery Details*, 1896.]

STORES FOR GUN AND REPOSITORY DRILLS, AND FOR GENERAL INSTRUCTION. (SERVICE COMPANIES.)

(*Referred to in paragraph* 124, *Section XII, Part II, Equipment Regulations.*)

TABLE II.	No.	Remarks.
Woolwich Store Charge, No. 2.		
Axes, pick { heads	2	} Required when erecting light sheers.
{ helves	2	
Mauls, iron, hoop	8	
Posts, picket, 5 feet	6	
	36	Holdfasts for light sheers.
Shovels, universal	4	Required when erecting light sheers.
Tent, mallets	6	
Woolwich Store Charge, No. 4.		
Carts, sling	1	
Wagons, sling, 6 tons	1	
Woolwich Store Charge, No. 5.		
Brushes, water, carriage	4	For cleaning projectiles.
Woolwich Store Charge, No. 7.		
Hammers, claw, 28-oz.	2	
Woolwich Store Charge, No. 8.		
Pincers, carpenters ...pairs	1	
Prickers, cartridge	1	
Spanners, McMahon, 15-inch	1	
Spikes, marline, iron, 12-inch	12	
Woolwich Store Charge, No. 10.		
Filters, hydraulic, jack	1	
Frames, store, hydraulic jack, G.S.	1	
Jacks, lifting { hydraulic G.S, 10 tons	2	
{ screw Clerk's	1	
Slings, chain, 12 to 25 tons { breech	1	
{ muzzle	1	
Thimbles (to take hook of 15-inch block)	3	For light sheers.

Digitized by Google

Stores for Gun and Repository Drills, and for General Instruction. (Service Companies)—*continued.*

TABLE II—*continued.*	No.	Remarks.
Woolwich Store Charge, No. 11.		
Grease. Field's ... ... kegs	1	Annual supply.
Paint { blue, ultramarine ... ... lb.	1	
{ lead { red... ... ... ,,	1	
{ lead { white ... ... ,,	1	
Woolwich Store Charge, No. 12.		
Timber, spars { 40 feet by 13 inches mean diam.	2	For sheer legs.
for sheers and { 25 feet by 7 inches	1	For derrick.
derricks { 30 feet by 9 inches...	1	
Woolwich Store Charge, No. 13.		
Lithographs, coloured, small (tube, electric, No. 10)	1	
Woolwich Store Charge, No. 14.		
Buckets, sponge, garrison	3	
Capstans, crab	1	
Carriages, garrison, R.M.L. 64-pr., 58 cwt., common, wood	4	
Cylinders, recoil, steel, 6-inch, B.L., disappearing carriages, Mark IV	1	
Gyns, triangle, with appurtenances { heavy ...	1	
{ light ...	1	
Handspikes, common { 7 feet	16	
{ 6 feet	40	
Levers { No. 1	1	
{ 14 feet	2	
{ 12 ,, ...	2	
Pedestals, carriage, garrison, common, R.M.L., 64-pr., 58 cwt.	4	
Spanners { No. 32	1	
{ ,, 33	1	
{ ,, 37	1	
Wagons, platform	1	
Woolwich Store Charge, No. 15.		
Boxes, grease, 3-lbs.	1	
Woolwich Store Charge, No. 16.		
Ordnance, S.B. guns { 68-pr., 95 cwt.	1	For elementary instruction.
{ 32-pr., 58 cwt.	2	If available.
Plugs, vent...	2	
Prickers, vent, 12-inch...	2	
Spikes, gun { common	1	
{ spring	1	
Vent Servers (with lanyard)	2	

Digitized by Google

Stores for Gun and Repository Drills, and for General Instruction. (Service Companies)—*continued.*

TABLE II—*continued.*	No.	Remarks.
Woolwich Store Charge, No. 17.		
Boxes, obturating pads, 5-inch	1	
Extractors, tube: vent sealing	1	
Extractors, tube: V. M.	1	
Extractors, tube: P.	1	
Extractors, tube: P. special	1	
Ordnance, B.L., 5-inch, Mark III.: bolts, stop	1	
Ordnance, B.L., 5-inch, Mark III.: boxes, slide	1	
Ordnance, B.L., 5-inch, Mark III.: discs, pad, obturating, adjusting	2	
Ordnance, B.L., 5-inch, Mark III.: discs, pad, obturating, protecting sets	1	
Ordnance, B.L., 5-inch, Mark III.: locks, percussion	1	
Ordnance, B.L., 5-inch, Mark III.: pads, obturating	1	
Ordnance, B.L., 5-inch, Mark III.: rings, carrier	1	
Ordnance, B.L., 5-inch, Mark III.: screws, breech	1	
Ordnance, B.L., 5-inch, Mark III.: vents, axial	1	
Ordnance, B.L. fittings: locks, electric, B	1	
Ordnance, B.L. fittings: locks, percussion, D	1	
Ordnance, B.L. fittings: wrenches, firing mechanism	1	
Ordnance: R.M.L. 64-pr., 58 cwt	2	For drill and shifts.
Ordnance: S.B.B.L., 32-pr., fittings		
Ordnance: Cups, obturating, large	1	
Rimers, vent, axial	1	
Woolwich Store Charge, No. 18.		
Blocks, wood, Bothway, single, 12-inch	1	
Blocks, wood, Bothway, single, 8-inch	2	For erecting light sheers.
Blocks, wood, Bothway, double, 12-inch	1	
Blocks, wood, Bothway, double, 8-inch	2	For erecting light sheers.
Blocks, wood, double, 12-inch (in parts)	1	
Blocks, wood, treble, 12-inch	2	For erecting light sheers.
Blocks, wood, Snatch, 12-inch	2	For erecting light sheers.
Blocks, wood, Snatch, 15-inch	2	For erecting light sheers.
Brushes, piasaba, R.M.L. 80-pr.	2	
Caps, sponge, No. 8	2	
Cases, cartridge, No. 4	4	For 80, 64, and 40-pr. R.M.L. and 40-pr. R.B.L. guns.
Cordage, hawser, 3-strand, tarred, 4½-inch fathoms	113	In two half-coils for guys. For light sheers.
Cordage, hawser, 3-strand, tarred, 2½ ,,	113	For general purposes.
Cordage, hawser, 3-strand, tarred, 2½ ,,	113	In two half-coils for runners. For light sheers.
Cordage, hawser, 3-strand, tarred, 2½ ,,	75	In three lengths of 25 fathoms. For light sheers.
Cordage, hawser, 3-strand, tarred, 1½ ,,	113	For general purposes.
Cordage, hawser, 3-strand, tarred, 1 ,,	48	For anti-twisters. For light sheers.
Cordage, hawser, 3-strand, white, 4 ,,	113	For main tackle. For light sheers.
Cordage, hawser, 3-strand, white, 4 ,,	25	For head lashing of light sheers.
Cordage, spun yarn lbs.	2	
Cordage, spun yarn lbs.	12	For making selvagees.

Digitized by Google

Stores for Gun and Repository Drills, and for General Instruction. (Service Companies)—*continued.*

TABLE II—*continued.*	No.	Remarks.
Woolwich Store Charge, No. 18—continued.		
Gaskets, crab, capstan	2	
Rammers, R.M.L. 64-pr.	2	
Ropes drag, heavy ... ... pairs	8	
Ropes parbuckling, 18 fathoms, 4-inch... ...	4	
Selvagees, ordinary	4	
Slings, rope 6-inch, 12 feet long	5	For light sheers.
Slings, rope 6 ,, 5 ,, ,, ...	1	
Slings, rope 5 ,, 5 ,, ,, ...	1	
Slings, rope 4 ,, 5 ,, ,, ...	1	
Sponges, R.M.L., 64-pr., wood stave, 58 cwt. ...	2	
Tackles luff, 14 fathoms	5	
Tackles whip upon whip	2	
Tampeons, R.M.L. 80-pr.	2	
Twine, whipping... ... ... lb.	1	
Wadhooks, S.B., 8-inch gun	2	
Woolwich Store Charge, No. 19.		
Blocks, dismounting, siege	2	
Planks, moving guns half 6-ft. × 12-in.... ...	8	
Planks, moving guns half 4 ,, × 12 ,, ...	4	
Planks, moving guns whole 10 ,, × 17 ,, fir ...	12	
Planks, moving guns whole 10 ,, × 17 ,, oak ...	6	
Rollers, ground 6 ft. × 10 in. diameter ...	4	
Rollers, ground 6 ,, × 6 ,, ,, ...	4	
Rollers, ground 3 ,, × 6 ,, ,, ...	4	
Rollers, ground 2 ,, × 5 ,, ,, ...	3	
Rollers, ground 14 in. × 5 ,, ,, ...	2	
Scotches large	20	
Scotches large, handled	2	
Scotches medium	30	
Scotches small	30	
Shoes, sheer for feet of sheers	2	
Shoes, sheer for foot of derrick	1	
Skids 20 ft. × 15 in. square	2	
Skids 20 ,, × 9 ,, ,, ...	2	
Skids 6 ,, × 12 ,, ,, ...	10	
Skids 5 ,, × 6 ,, × 5 in.	4	
Skids 4 ,, × 12 ,, square	10	
Skids 3 ,, × 9 ,, × 6 in.	8	
Skids 3 ,, × 6 ,, × 5 ,, ...	8	
Skids 3 ,, × 6 ,, × 3 ,, ...	8	
Skids 3 ,, × 5 ,, × 4 ,, ...	8	
Skids dismounting 14 ft. × 8 in. square ...	8	
Skids dismounting 10 ,, × 8 ,, × 13 in. ...	1	
Woolwich Store Charge, No. 20.		
Cartridges drill, R.M.L., 64-pr., 8 lbs.	1	
Cartridges B.L., empty, 6-inch, 12 lbs. E.X.E.	1	
Cartridges R.B.L., empty, serge, 40-pr., 5 lbs.	1	
Cartridges R.M.L., silk cloth, 9-inch 50 lbs. ...	1	
Cartridges R.M.L., silk cloth, 9-inch 33 ,, ...	1	
Cases, powder, 100 lbs....	1	

Digitized by Google

Stores for Gun and Repository Drills, and for General Instruction. (Service Companies)—*continued.*

TABLE II—*continued.*	No.	Remarks.
Woolwich Store Charge, No. 20—continued.		
Charcoal alder ground	1	Specimen of each in bottles.
Charcoal alder whole	1	
Charcoal dogwood ground	1	
Charcoal dogwood whole	1	
Saltpetre rough	1	
Saltpetre refined	1	
Sulphur, refined	1	
Woolwich Store Charge, No. 21.		
Acid, picric	1	Specimen in bottle.
Bags, primer, filled 7 drs.	1	
Bags, primer, filled 10 oz.	1	
Cartridges B.L., filled, 6-inch, 12 lbs., E.X.E.	1	Filled with wooden prisms.
Cartridges R.B.L., filled, 40-pr. 5 lbs., R.L.G.	1	Filled with coal dust.
Cartridges R.M.L., 9-inch 50 lbs.	1	Filled with wooden cubes.
Cartridges R.M.L., 9-inch 33 ,,	1	
Gunpowder, specimens in glass bottles: E.X.E.	1	About 2 ozs. in bottle.
L.G.	1	
M.G.[1]	1	
P.	1	
S.P.	1	
P.[2]	1	
Prism[1], black	1	
Prism[2]	1	
Prism[1], brown	1	
Q.F.[1]	1	
R.F.G.	1	
R.F.G.[2]	1	
R.L.G.	1	
R.L.G.[2]	1	
R.L.G.[4]	1	
S.B.C.	1	
Rifle pistol	1	
Lyddite	1	Specimen of each in bottle.
Picric powder	1	
Woolwich Store Charge, No. 22.		
Adapters, shell rifled	1	
Adapters, shell S.B.	1	
Batteries and keys, test and firing	1	
Boxes tube, garrison	2	
Boxes Vesuvian matches	1	2 ozs. (in glass bottle), per work where electric P and V tubes are used for drill; for re-priming the tubes.*
Composition, priming ozs.	2	
Cups, R.B.L. guns 7-inch	1	
Cups, R.B.L. guns 40-pr.	1	
Cups, R.B.L. guns 40-pr. side closing	1	
Cylinders, detonator, No. 8, for 8, Siege Artillery, Mark II	1	

* P tubes take 2 grains, V tubes 3½ grains.

Digitized by Google

Stores for Gun and Repository Drills, and for General Instruction. (Service Companies)—*continued.*

TABLE 11—*continued.*	No.	Remarks.
Woolwich Store Charge, No. 22—continued.		
Extractors, tin, cup — cross head	1	
Extractors, tin, cup — hook	1	
Fuzes, unserviceable, time, wood	100	
Implements, fuze, shell, and cartridge — bits, hook's borer	6	
Implements, fuze, shell, and cartridge — cylinders, common	1	
Implements, fuze, shell, and cartridge — drifts, G.S.	1	
Implements, fuze, shell, and cartridge — drivers, screw, Shrapnel, large	1	
Implements, fuze, shell, and cartridge — extractors, fuze, small rifled	1	
Implements, fuze, shell, and cartridge — funnels, shell, copper, small	1	
Implements, fuze, shell, and cartridge — handles, hook borer	1	
Implements, fuze, shell, and cartridge — hooks, G.S. wad	1	
Implements, fuze, shell, and cartridge — hooks, hook borer	1	
Implements, fuze, shell, and cartridge — keys, fuze and plug, Armstrong	1	
Implements, fuze, shell, and cartridge — keys, fuze and plug, G.S.	1	
Implements, fuze, shell, and cartridge — keys, universal	1	
Implements, fuze, shell, and cartridge — mallets, common	1	
Implements, fuze, shell, and cartridge — pincers, Shrapnel, primer	1	
Implements, fuze, shell, and cartridge — rods, filling, shell, large	1	
Implements, fuze, shell, and cartridge — rods, filling, shell, small	1	
Implements, fuze, shell, and cartridge — scrapers, shell, 32-inch	1	
Implements, fuze, shell, and cartridge — scrapers, shell, 20 ,,	1	
Implements, fuze, shell, and cartridge — wrenches, base plug	1	
Lanyards, friction tube, garrison, No. 1	1	
Lanyards, friction tube, garrison, ,, 2	1	
Lanyards, friction tube, garrison, ,, 3	2	
Plugs, base, shell, medium	1	
Plugs, base, shell, large	1	
Straps, tube box, long	2	
Tubes, friction, drill	3	
Tubes, vent-sealing, electric, P. drill	1	
Tubes, vent-sealing, electric, V. ,,	1	
Tubes, vent-sealing, friction, V. ,,	1	
Tubes, vent-sealing, percussion ,,	1	
Woolwich Store Charge, No. 23.		
Bags, burster, Q.F., 4·7-inch, armour piercing	1	
Bags, burster, Q.F., 4·7-inch, cast-steel	1	
Cartridges, Q.F. — adapters	1	
Cartridges, Q.F. — primers, electric, large	1	
Cartridges, Q.F. — 6-pr., common shell	1	
Cartridges, Q.F. — 6-pr., steel shell	1	
Cartridges, Q.F. — 4·7-inch, empty	1	
Cartridges, Q.F. — 4·7-inch, ,, lids	1	
Cartridges, Q.F. — 4·7-inch, ,, wads, felt	1	
Cartridges, Q.F. — 4·7-inch, ,, ,, millboard	1	
Cartridges, Q.F. — saluting, 6-pr., cases, Mark III	1	
Cartridges, Q.F. — saluting, 6-pr., wads, felt, Mark III	1	
Cartridges, Q.F. — parts of, 6-pr. steel shell, Mark III	1	
Clips, cartridge, Q.F., 6-pr.	1	
Extractors, cartridge, hand, Q.F., small	1	
Gauges, shell, ring, Q.F., body, 4·7-inch	1	
Gauges, shell, ring, Q.F., band, 4·7-inch, high	1	
Gauges, shell, ring, Q.F., band, 4·7-inch, low	1	
Implements, fuze, shell, and cartridge, 4·7-inch — clips, cartridge	1	
Implements, fuze, shell, and cartridge, 4·7-inch — keys, electric, Q.F., large, inserting primer	1	
Implements, fuze, shell, and cartridge, 4·7-inch — keys, electric, Q.F., large, removing primer	1	

Digitized by Google

Stores for Gun and Repository Drills, and for General Instruction. (Service Companies)—*continued.*

TABLE II—*continued.*	No.	Remarks.
Woolwich Store Charge, No. 23—continued.		
Plugs, base, shell, Hotchkiss, Mark I	1	
Shells, Q.F., empty, 4·7-inch — armour-piercing	1	
Shells, Q.F., empty, 4·7-inch — common — iron	1	
Shells, Q.F., empty, 4·7-inch — common — cast steel	1	
Woolwich Store Charge, No. 24.		
Bags — blowing charges — large	1	
Bags — blowing charges — small	1	
Bags — burster — B.L., common, 6-inch — cast steel (dowlas)	1	
Bags — burster — B.L., common, 6-inch — iron (serge) ...	1	
Bags — burster — R.M.L., common — 64-pr., Mark III (dowlas)	1	
Bags — burster — R.M.L., common — studded, 9-inch (serge) ...	1	
Bags — burster — R.M.L., common — studless, 9-inch — cast steel (silk cloth)	1	
Bags — burster — R.M.L., common — studless, 9-inch — iron (serge)...	1	
Bags — burster — B.L. or Q.F., common, pointed, 6-inch, Mark I	1	
Discs, base plug — large	1	
Discs, base plug — small	1	
Gaschecks, R.M.L. — 9-inch — automatic, Mark I ...	1	
Gaschecks, R.M.L. — 9-inch — Mark I ,, II ...	1	
Gaschecks, R.M.L. — 9-inch — Mark I	1	
Gaschecks, R.M.L. — 9-inch — ,, II	1	
Gaschecks, R.M.L. — 6·3-inch...	1	
Gaschecks, R.M.L. — 40-pr.	1	
Implements, fuze, shell, and cartridge — chisels — metal	1	
Implements, fuze, shell, and cartridge — chisels — preparing cannelures ...	1	
Implements, fuze, shell, and cartridge — hammers, metal	1	
Implements, fuze, shell, and cartridge — spanners, nut, 7-inch	1	
Implements, fuze, shell, and cartridge — gas-check plug, 6·3-inch	1	
Plates, stencil, brass — bag	1	
Plates, stencil, brass — filled	1	
Plates, stencil, copper, ring — B.L., common — red band, 6-inch ...	1	
Plates, stencil, copper, ring — B.L., common — white band, 6-inch ...	1	
Rings, base plug — large	1	
Rings, base plug — small	1	
Shells — B.L. empty, common, 6-inch — Mark III, iron ...	1	
Shells — B.L. empty, common, 6-inch — pointed, Mark I ...	1	
Shells — R.M.L. empty — common — 9-inch — studded — prepared ...	1	
Shells — R.M.L. empty — common — 9-inch — studded — unprepared	1	
Shells — R.M.L. empty — common — 9-inch — studless, iron... ...	1	
Shells — R.M.L. empty — common — 64-pr.	2	
Shells — R.M.L. empty — ring, 2·5-inch	1	
Shot — B.L., case, 6-inch	1	
Shot — R.M.L., case — 9-inch	1	
Shot — R.M.L., case — 80-pr.	1	With removable lid.
Shot — empty, paper — B.L. — 9·2-inch — front ...	1	
Shot — empty, paper — B.L. — 9·2-inch — rear ...	1	
Shot — empty, paper — B.L. — 6-inch	1	
Shot — empty, paper — R.M.L., 9-inch	1	
Strips, augmenting, B.L., 6-inch	6	
Wads — fuze hole — G.S.	2	
Wads — fuze hole — R.B.L., sockets	2	
Wads — wedge — 9-inch	1	
Wads — wedge — 8 ,, ...	1	

Digitized by Google

Digitized by Google

Digitized by Google

LONDON:
Printed for Her Majesty's Stationery Office,
By Harrison and Sons,
Printers in Ordinary to Her Majesty.
(Wt. 13211 1625 10 | 96—1867)

Digitized by Google

WORKS prepared in Intelligence Division—continued.

FRANCO-GERMAN WAR, 1870-71—*continued.*

Section *Also separately, in paper covers:*—

1:—**Events in July.** Price 3*s.*

2:—**Events to Eve of Battles of Wörth and Spicheren. Price 3*s.***

3:—**Battles of Wörth and Spicheren. 1882. Price 5*s.*** *(Out of print.)*

4:—**Advance of Third Army to the Moselle, &c. Second Edition, revised and corrected. Price 4*s.*** *(Out of print.)*

5:—**Operations near Metz on 15th, 16th, and 17th August. Battle of Vionville-Mars-la-Tour. Second Edition. Price 6*s.* 6*d.***

6:—**The Battle of Gravelotte—St. Privat. 5*s.*** *(Out of print.)*

7:—**Advance of Third Army and of Army of the Meuse against Army of Chalons. Price 6*s.***

8:—**Battle of Sedan. Price 3*s.*** *(Out of print.)*

9:—**Proceedings on German Coast and before Fortresses in Alsace and Lorraine. General Review of War up to September. Price 4*s.* 6*d.***

10:—Investment of Paris. Capture of Toul and Strassburg. **Price 6*s.***

11:—**Events before Paris and at other Points of Theatre of War in Western France until end of October. Price 5*s.* 3*d.***

12:—**Local Engagements with French Army of the Rhine. Price 4*s.* 6*d.***

13:—**Occurrences on Theatre of War in Central France up to re-occupation of Orleans by the Germans. Price 6*s.***

14:—**Measures for Investment of Paris. Price 4*s.***

15:—**Measures for protecting Investment of Paris. Price 2*s.* 6*d.***

16:—**Proceedings of Second Army. Price 3*s.* 6*d.***

17:—**Proceedings of First Army. Price 3*s.***

18:—**Occurrences on South-eastern Theatre of War up to the middle of January, 1871. Price 8*s.***

19:—**Occurrences on South-east Theatre of War. Price 13*s.* 6*d.***

20:—**General Retrospect of the War. The Results of the War. Price 5*s.***

FRENCH ARMY. HANDBOOK OF THE. 1891. Price 1*s.* 6*d.*

GERMAN FIELD ARTILLERY. Drill Regulations. 1892. Translated by Captain W. A. Macbean, R.A. Price 2*s.*

GERMAN INFANTRY. The Musketry Instructions for Translated by Colonel C. W. Bowdler Bell. 1889. Price 2*s.* 6*d.*

GERMANY: Campaign of 1866 in. Compiled by the Department of Military History of the Prussian Staff. Price £1 1*s.*

HOSTILITIES WITHOUT DECLARATION OF WAR. An Historical Abstract of the cases in which Hostilities have occurred between Civilised Powers prior to declaration or warning. From 1700 to 1870. By Bt. Lieut.-Colonel J. F. Maurice, R.M. 1883. Price 2*s.*

ITALIAN ARMY. Handbook of the. Price 1*s.* 6*d.*

RECONNAISSANCE IN LITTLE KNOWN COUNTRIES. Hints on. By Captain C. E. Callwell, R.A., Staff Captain. Price 1*d.*

RUSSIA. MILITARY FORCES OF. Handbook of the. By Captain J. M. Grierson, R.A., D.A.A.G. 1894. Price 2*s.*

STAFF. GENERAL. The Duties of. By General Bronsart von Schellendorf Corrected and Revised by Colonel Meckel, of the Great General Staff, Berlin. Translated from the German by W. A. H. Hare, Lt.-Col., R.E. Third edition. 1895. Price 6*s.*

SUDAN CAMPAIGN. History of. In Two Parts, with Case of Maps. By Colonel H. E. Colvill, C.B., Gren. Guards. 1890. Price 15*s.*

SUDAN, RED SEA, AND EQUATOR. REPORT ON THE EGYPTIAN PROVINCES OF THE. Revised up to July, 1884. Price 3*s.* 6*d.*

SURVEYS (GOVERNMENT) OF THE PRINCIPAL COUN-TRIES. NOTES ON. With the Civil and Military Divisions of each Country, Measures of Length and Surface, Lists of Government Maps, Conventional Signs and Abbreviations employed, and useful Tables for Map Reading: to which is added a List of Colonial and extra-Continental Possessions, and a List of Map Agents. 1882. Price 6*s.*

TACTICS. MODERN. A Précis of. 1892. Price 4*s.* 6*d.*

TURKISH ARMY. Handbook of the. 1892. Price 4*d.*

VALPARAISO. Capture of, in 1891. **Reports on.** Price 1*s.*

WAR GAME ON A MAP. Rules for the Conduct of. 1896 Price 3*d.*

ZULULAND. Précis of Information concerning. Corrected to December, 1894. Price 4*s.*

Digitized by Google